brother®

LASER PRINTER
SERVICE MANUAL

MODEL:HL-1260

No part this publication may be reproduced in any form or by any means without permission in writing from the publisher.

Trademarks:

- BR-Script, and DX-1200 are registered trademarks of Brother Industries, Ltd.
- Centronics is a registered trademark of Genicom Corporation.
- PostScrip is a registered trademark of Adobe Systems Incorporated.
- IBM Proprinter XL is a registered trademark of International Business Machines Corporation.
- EPSON FX-850 is a registered trademark of Seiko Epson Corporation.
- HP-GL and HP Laser Jet 4 are registered trademarks of Hewlett Packard Company.

PREFACE

This service manual contains basic information required for after-sales service of the laser printer (hereinafter referred to as ”this machine” or ” the printer”). This information is vital to the service technician in maintaining the high printing quality and performance of the printer.

This manual consists of the following chapters:

Chapter I	:	General
		Features, specifications, etc.
Chapter II	:	Theory of Operation
		Basic operation of the mechanical system and the electrical system, and their timing.
Chapter III	:	Electrical System
		Theory of the electronics circuit
Chapter IV	:	Mechanical System
		Requirements for a suitable location, disassembling and reassembling procedure of mechanical system.
Chapter V	:	Maintenance and Servicing
		Parts replacement schedule, list of tools, lubricants and cleaners.
Chapter VI	:	Troubleshooting
		Reference values and adjustment, troubleshooting for image defects, troubleshooting for malfunctions, etc.
Appendices	:	Engine Block Diagram, PCB Circuitry Diagrams, etc.

Information in this manual is subject to change due to improvement or re-design of the product. All relevant information in such cases will be supplied in service information bulletins (Technical Information).

A thorough understanding of this printer, based on information in this service manual and service information bulletins, is required for maintaining its quality performance and for fostering the practical ability to find the cause of troubles.

CONTENTS

CHAPTER I GENERAL

1. FEATURES I-1
2. SPECIFICATIONS I-1
3. SAFETY INFORMATION I-6
   - 3.1 Laser Safety (110 - 120V Model only) I-6
   - 3.2 CDRH Regulations (110 - 120V Model only) I-7
   - 3.3 Additional Information I-7
4. PARTS OF THE PRINTER I-8
   - 4.1 External Views I-8
   - 4.2 Cross Sectional View I-9
5. STORAGE AND HANDLING OF EP-ED CARTRIDGES I-10
   - 5.1 Storage of Sealed EP-ED Cartridges I-10
   - 5.2 Storage of Unsealed EP-ED Cartridges I-10

CHAPTER II THEORY OF OPERATION

1. BASIC OPERATIONS II-1
   - 1.1 Mechanical Configuration II-1
   - 1.2 Main Drive II-2
   - 1.3 Basic Sequence of Operations II-3
2. LASER/SCANNER SYSTEM II-4
3. IMAGE FORMATION SYSTEM II-5
   - 3.1 Outline II-5
   - 3.2 Printing Process II-5
     - 3.2.1 Electrostatic latent image formation stage II-6
     - 3.2.2 Developing stage II-8
     - 3.2.3 Transfer stage II-9
     - 3.2.4 Fixing stage II-10
     - 3.2.5 Drum cleaning stage II-10
   - 3.3 Operation II-11
4. PAPER PICK-UP/FEED SYSTEM II-12
   - 4.1 Outline II-12
   - 4.2 Cassette Feed II-13
   - 4.3 MP Tray Feed II-14
   - 4.4 Paper Jam Detection II-15

CHAPTER III ELECTRICAL SYSTEM

1. MAIN PCB III-1
   1.1 Outline III-1
   1.2 Video Controller Circuit III-2
   1.3 Engine Controller Circuit III-7
2. PAPER FEED DRIVE CIRCUIT III-9
3. DISPLAY CIRCUIT III-11
   3.1 Outline III-11
   3.2 Operation III-11
4. LOW-VOLTAGE POWER SUPPLY ASSY III-12
   4.1 Outline III-12
   4.2 Protection Functions III-12
5. HIGH-VOLTAGE POWER SUPPLY ASSY III-14
   5.1 Outline III-14
   5.2 Operation of the Components of the High-Voltage Power Supply Assy III-14

CHAPTER IV MECHANICAL SYSTEM

PRINTER DISASSEMBLING PROCEDURE

PRINTER BODY

1.1 Configuration IV-3
1.2 Toner Cartridge Lid IV-3
1.3 Side Cover L IV-3
1.4 Font Cover Assy IV-4
1.5 Upper Cover Assy, Rear Cover Assy IV-4
   1.5.1 Upper cover assy, rear cover assy IV-4
   1.5.2 Changeover guide, jam remove cover IV-5
1.6 Side Cover R IV-5
1.7 DC Fan Motor IV-6
1.8 Main PCB IV-6
1.9 Control Panel Unit IV-8
1.10 Scanner Unit IV-9
1.11 Cartridge Stopper Assy IV-9
1.12 Paper Feed Chassis Unit IV-10
1.13 Separation Pad Assy IV-11
1.14 MP PE Sub Actuator IV-12
1.15 P Feed /Size-SW PCB Assy IV-12
1.16 Side-Switch Spring IV-12
1.17 Regist Sensor Actuator IV-13
1.18 MP Paper Detection Actuator IV-13
1.19 PE Sensor Actuator MP IV-13
1.20 Tray Sensor Holder IV-14
1.21 Roller Holder IV-14
1.22 Paper Pick-up Roller Assy, Bearing IV-15
1.23 Paper Pick-up Solenoid IV-16
1.24 Paper Feed Motor Assy IV-16
1.25 MP Tray Cover IV-17
1.26 MP Tray Assy IV-17
1.27 Paper Path Separation Plate, Paper Path Separation Film IV-18
1.28 Latch IV-19
1.29 Fixing Unit (for both 120V and 230V, the only difference is the halogen heater) . IV-19
1.30 Transfer Unit IV-22

1.31 DC Gear Holder Assy IV-23
1.32 PS Switch Wire, Remote Switch IV-23
1.33 High-Voltage Power Supply PCB Assy IV-24
1.34 Low-Voltage Power Supply PCB Assy IV-24
1.35 Toner Cartridge (EP-ED Cartridge) IV-25
1.36 Paper Tray IV-25

CHAPTER V MAINTENANCE AND SERVICING

1. PERIODICAL REPLACEMENT PARTS V-1
2. CONSUMABLE PARTS STANDARD ENDURANCE TABLE V-1
3. LIST OF STANDARD TOOLS V-2
4. LIST OF LUBRICANTS AND CLEANERS V-3

CHAPTER VI TROUBLESHOOTING

1. INTRODUCTION VI-1
1.1 Initial Check VI-1
1.2 Basic Procedure VI-2
2. TEST PRINTING AND MECHANICAL CHECK VI-2
2.1 Test Printing VI-2
3. IMAGE DEFECTS VI-3
3.1 Image Defect Examples VI-3
3.2 Troubleshooting Image Defects VI-4
4. TROUBLESHOOTING OF MALFUNCTIONS VI-11
5. TROUBLESHOOTING PAPER TRANSPORT PROBLEMS VI-19
5.1 Paper Jams VI-19
5.2 Incomplete Paper Feed VI-22
6. OPERATION VI-23
6.1 Line Inspection Mode Procedure VI-23
6.2 DRAM Test VI-25
7. STATUS MESSAGE LIST VI-26

APPENDICES

1. Engine Block Diagram A-1
2. Paper Feed/Size-SW PCB Circuitry Diagram (1/1) A-2
3. Main PCB Circuitry Diagram (1/8) A-3
4. Main PCB Circuitry Diagram (2/8) A-4
5. Main PCB Circuitry Diagram (3/8) A-5
6. Main PCB Circuitry Diagram (4/8) A-6
7. Main PCB Circuitry Diagram (5/8) A-7
8. Main PCB Circuitry Diagram (6/8) A-8
9. Main PCB Circuitry Diagram (7/8) A-9
10. Main PCB Circuitry Diagram (8/8) A-10
11. Control Panel PCB Circuitry Diagram (1/1) A-11
12. Scanner LD PCB Circuitry Diagram (1/1) A-12

CHAPTER I GENERAL

1. FEATURES

A. This high-speed, non-impact (low-noise) printer is based on electrophotography, electronics and laser technology.

B. The printer is compact and easy to carry. The internally-storable, front-loading paper cassette enables you to save an occupation space for the machine; the printer can now be installed in a smaller place.

C. The charging roller, developing cylinder, photosensitive drum and cleaner of the printer are combined into a single assembly called an ”EP-ED cartridge”. The cartridge can be replaced by the user when necessary without a need of service call. High printing quality is maintained by a simple cleaning procedure.

D. Laser beam safety is designed into the printer. The printer is approved by the US Center for Devices and Radiological Health (CDRH).

E. Paper can be fed in two ways, by the multi-purpose paper feed tray and paper cassette.

F. Maintenance is easy with print component units which are directly detachable, and they require no adjustment after reassembly.

2. SPECIFICATIONS

(1)	Type	Desktop page printer
(2)	Printing method	Electrophotography (single-component dry toner)
(3)	Printing speed	
	Cassette feed	12 pages/minute (A4/Letter size by cassette feed) 10.2 pages/minute (Legal size)
(4)	First print time	Approx. 20 seconds (A4 size by face-down print delivery from the paper cassette)
(5)	Warm-up (WAIT) time	Max. 1 minute at 20°C (68°F)
(6)	Optical system	
	Laser	Semiconductor laser Output power : 5mW max. Wave length : 780 nm
	Scanning system	Rotating six-faced polygon mirror
(7)	Resolution	
	Horizontal	600 dots/inch and high resolution control (HRC)
	Vertical	600 raster lines/inch

(8) Printing system

Photosensitive drum	OPC
Charging	Charging Roller
Exposure	Laser scanning system
Development	Toner projection development system
Paper feed	Cassette or manual feed
Image transfer	Roller method
Separation	Natural(utilizing a small drum radius), Static charge eliminator
Fixing	Heated fixing roller
Toner supply	Included in the replaceable EP-ED cartridge
Life expectancy	6000 pages/cartridge

(9) Paper

Cassette feed	Plain paper for Letter, Legal, A4, ISO B5, A5, ISO B6, A6, Executive (A4 or letter size paper with the print density set at level 8 with 4% coverage, recommended: 60 g/m^2 —105 g/m^2) and Envelope (com10, monarch, C5, DL, ISO B5)
Multi-purpose Tray	Plain paper of 90 x 148 mm — 216 x 356 mm (recommended: 60g/m^2 — 135 g/m^2, overhead projector (OHP) film, postcards, label stock and envelopes (specified sizes)

(10) Cassette (Tray 1)

Universal cassette	A4, Letter, Legal, ISO B5, Executive, A5, ISO B6, and A6
Maximum load height	55 mm (500 sheets of 80 g/m^2 paper)
Feedable paper type	60 — 105 g/m^2
Envelopes	40 envelopes

(11) Print delivery Face-down or (face-up)

(12) Print delivery tray capacity

Face-down	250 sheets (80 g/m^2)
Face-up	Discharge only

(13) Effective printing area

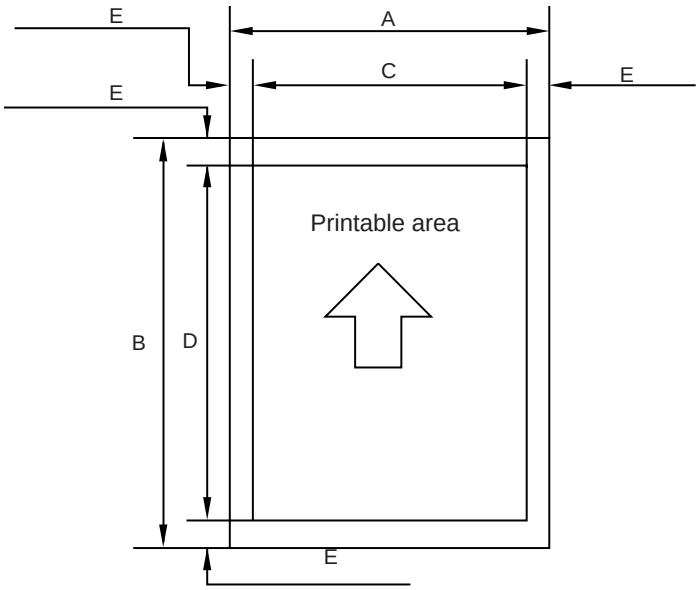

Figure 1.1 Printable Area

Effective printable area is referred to as a area within which is guaranteed the printing of all interface signal data on a hard copy without any omission.

The tables below shows the effective printable area for each paper size.

Table 1.1 Plain Paper

SIZE	A (mm)	B (mm)	C (mm)	D (mm)	E (mm)
A 4	210.0	297.0	203.2	288.5	3.39 ± 1.0
Letter	215.9	279.4	207.4	270.9	4.23 ± 1.0
Legal	215.9	355.6	207.4	347.1	4.23 ± 1.0
B 5 (ISO)	176.0	250.0	167.5	241.5	4.23 ± 1.0
Executive	184.2	266.7	175.7	258.2	4.23 ± 1.0
A 5	148.0	210.0	139.5	201.5	4.23 ± 1.0
B 6 (ISO)	125.0	176.0	116.5	167.5	4.23 ± 1.0
A 6	105.0	148.0	96.5	139.5	4.23 ± 1.0

Table 1.2 Envelope

SIZE	A (mm)	B (mm)	C (mm)	D (mm)	E (mm)
COM-10	104.8	241.3	96.3	232.8	4.23 ± 1.0
MONARCH	98.4	190.5	89.9	182.0	4.23 ± 1.0
DL	110.1	221.0	101.6	212.5	4.23 ± 1.0
C5	162.2	228.6	154.1	220.1	4.23 ± 1.0
B5 (ISO)	176.0	250.0	167.5	241.5	4.23 ± 1.0

(The sizes above are nominal sizes according to ISO.)

An A4 sheet accepts 80 PICA-pitch characters (203.2mm).

(14) Standard interfaces	Automatic interface selection • Centronics, Bi-directional parallel • RS-232C serial Baud rate : 150, 300,1200, 2400, 4800, 9600 19200, 38400, 57600 bps Stop bit : 1 bit Start bit : 1 bit or 2 bits Data length : 7 bits or 8 bits Parity : Odd, Even, or None Protocol : Xon/Xoff or DTR
(15) Emulation	Automatic emulation selection • HP Laser Jet 4 (PCL Level 5^{e}) • EPSON FX-850 • IBM Proprinter XL • BR-Script level 2 (PostScript language emulation interpreter) • HP- GL
(16) CPU	79R3041 (20MHz)
(17) Resident fonts	75 scalable fonts and 12 bitmapped fonts

■ HP Laser Jet 4, EPSON FX-850, IBM Proprinter XL

Scalable Fonts:

Intellifont Compatible Fonts:
- Albertville, Extrabold
- Antique Oakland, Oblique, Bold
- Brougham, Oblique, Bold, Bold Oblique
- Cleveland Condensed
- Connecticut
- Guatemala Antique, Italic, Bold, Bold Italic
- Letter Gothic, Oblique, Bold
- Maryland
- Oklahoma, Oblique, Bold, Bold Oblique
- PC Brussels Light, Light Italic, Demi, Demi Italic
- PC Tennessee Roman, Italic, Bold, Bold Italic
- Utah, Oblique, Bold, Bold Oblique
- Utah Condensed, Oblique, Bold, Bold Oblique

Windows 3.1 Compatible Fonts:
- Tennessee Roman, Italic, Bold, Bold Italic
- Helsinki, Oblique, Bold, Bold Oblique
- BR Symbol
- W Dingbats

BR-Script Fonts:
- Atlanta Book, Book Oblique, Demi, Demi Oblique
- Copenhagen Roman, Italic, Bold, Bold Italic
- Portugal Roman, Italic, Bold, Bold Italic
- Calgary Medium Italic

Brother Original Fonts:
- Bermuda Script
- Germany
- San Diego
- US Roman

Bitmapped Fonts (Portrait and Landscape):
- Letter Gothic 16.66 Medium, Italic, Bold, Bold Italic
- OCR-A
- OCR-B

■ BR-Script Level 2 Mode

Scalable Fonts:

- Atlanta Book, Book Oblique, Demi, Demi Oblique
- Brussels Light, Light Italic, Demi, Demi Italic
- Brougham, Oblique, Bold, Bold Oblique
- Helsinki, Oblique, Bold, Bold Oblique
- Helsinki Narrow, Oblique, Bold, Bold Oblique
- Copenhagen Roman, Italic, Bold, Bold Italic
- Portugal Roman, Italic, Bold, Bold Italic
- Tennessee Roman, Italic, Bold, Bold Italic
- Calgary Medium Italic
- BR Symbol
- BR Dingbats
- Albertville, Extrabold
- Antique Oakland, Oblique, Bold
- Cleveland Condensed
- Conecticut
- Guatemala Antique, Italic, Bold, Bold Italic
- Letter Gothic, Oblique, Bold
- Maryland
- Oklahoma, Oblique, Bold, Bold Oblique
- Utah, Oblique, Bold, Bold Oblique
- Utah Condensed, Oblique, Bold, Bold Oblique
- Bermuda Script
- Germany
- San Diego
- US Roman

(18)	RAM	2M bytes (expandable to 26M bytes)
(19)	Font cartridge/card slots	Two slots One font cartridge slot and one font card slot
(20)	Power souse	USA and Canada : AC 110 to 120 V, 60 Hz Europe and Australia : AC 220 to 240 V, 50 Hz
(21)	Power consumption	Printing : 500 WH or less Stand-by : 80 WH or less Sleep : 20 WH
(22)	Noise	Printing : 49 dB A or less Stand-by : 40 dB A or less
(23)	Dimensions (W x H x D)	371.6 x 326.5 x 393 mm (14.6 x12.9 x 15.5 inches)
(24)	Weight	Approx. 15 kg (32.6 lbs)
(25)	Environmental conditions	

Operating environment	Temperature	10 ~ 32.5°C
	Relative humidity	20 ~ 80%RH (No condensation allowed)
	Air pressure	613 ~ 1013 hPa (0 ~ 2,500 m above sea level)
Non-operating environment	Temperature	0 ~ 35°C
	Relative humidity	10 ~ 80%RH (No condensation allowed)

Storage conditions

• Printer

Temperature

Normal (total storage time x 9/10)

0 ~ 35°C

Severe (total storage time x 1/10)

High	Low
35°C ~ 60°C	-20°C ~ 0°C

Temperature change (within 3 minutes)

High	Low
60°C → 15°C	-20°C → 25°C

Relative humidity

Normal (total storage time x 9/10)

35 ~ 85%RH

Severe (total storage time x 1/10)

High	Low
85 ~ 95%RH	10 ~ 35%RH

Air pressure 613 ~ 1013 hPa

Total storage time 0.5 years

• EP-ED cartridge

Temperature

Normal (2.45 years max.)

0 ~ 35°C

Severe (0.05 years max.)

High	Low
35°C ~ 40°C	-20°C ~ 0°C

Temperature change (within 3 minutes)

High	Low
40°C → 15°C	-20°C → 25°C

Relative humidity

Normal (2.45 years max.)

35 ~ 85%RH

Severe (0.05 years max.)

High	Low
85 ~ 95%RH	10 ~ 35%RH

Air pressure 613 ~ 1013 hPa

Maximum total storage time: 2.5 years including used time

3. SAFETY INFORMATION

3.1 Laser Safety (110 ~ 120V Model only)

This printer is certified as a Class 1 laser product under the US Department of Health and Human Services (DHHS) Radiation Performance Standard according to the Radiation Control for Health and Safety Act of 1968. This means that the printer does not produce hazardous laser radiation,

Since radiation emitted inside the printer is completely confined within the protective housings and external covers, the laser beam cannot escape from the machine during any phase of user operation.

3.2 CDRH Regulations (110 ~ 120V Model only)

The center for Devices and Radiological Health (CDRH) of the US Food and Drug Administration implemented regulations for laser products on August 2, 1976. These regulations apply to laser products manufactured from August 1, 1976. Compliance is mandatory for products marketed in the United States. The label shown below indicates compliance with the CDRH regulations and must be attached to laser products marketed in the United States.

MANUFACTURED :
BROTHER INDUSTRIES, LTD.
15-1, Naeshiro-cho, Mizuho-ku Nagoya 467, Japan.
This product complies with FDA radiation
performance standards , 21 CFR chapter 1
subchapter J.

Figure 1.2

Caution: Use of controls, adjustments or performance of procedures other than those specified in this manual may result in hazardous radiation exposure.

3.3 Additional Information

When servicing or adjusting the optical system of the printer, be careful not to place screwdrivers or other reflective objects in the path of the laser beam. Be sure to take off any personal accessories such as watches and rings before working on the printer. A reflected beam, though invisible, can permanently damage the eyes.

Since the beam is invisible, the following label is attached to the inside of covers where danger of exposure to laser radiation exist.

Figure 1.3

4. PARTS OF THE PRINTER

4.1 External Views

1. Upper cover
2. Control panel
3. MP tray
4. Tray 1
5. Tray 2 (Option)
6. Font card slot
7. Font cartridge slot
8. Power switch
9. AC inlet
10. Face-up print delivery port
11. Fan outlet port
12. Rating label
13. Optional I/O slot
14. RS-232C interface connector
15. Centronics interface connector
16. Optional interface connector

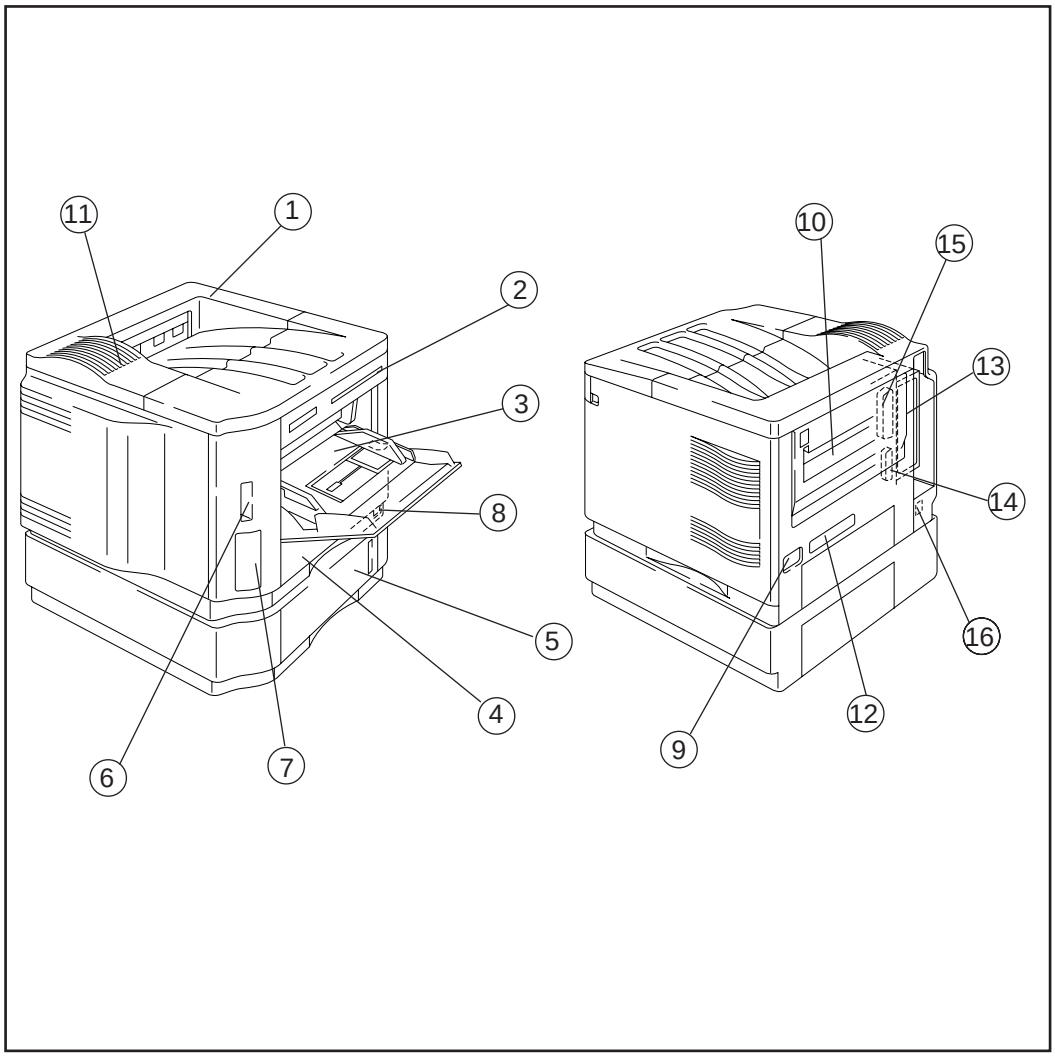

Figure 1.4

4.2 Cross Sectional View

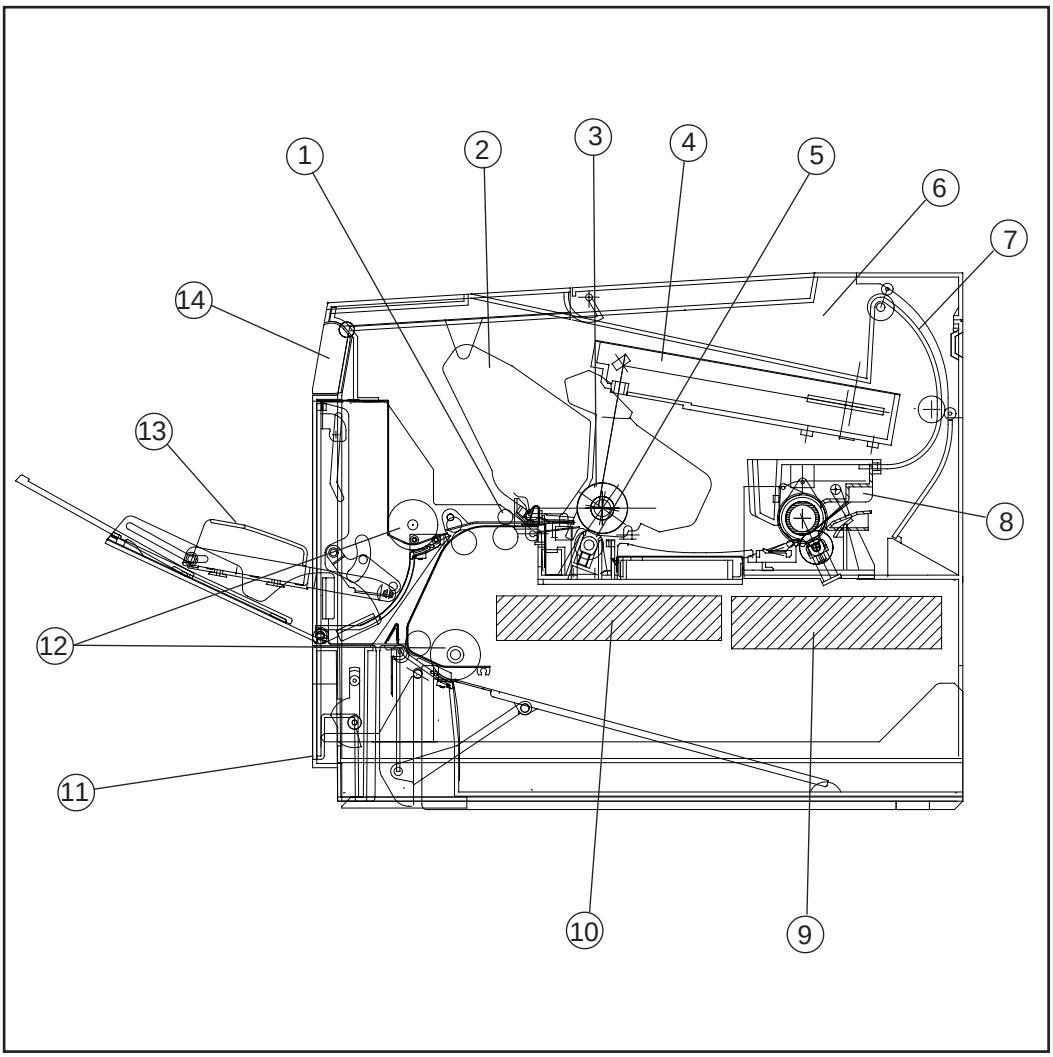

1. Registration rollers
2. EP-ED cartridge
3. Photosensitive drum
4. Laser scanner unit
5. Transfer unit
6. Face-down tray
7. Print-delivery path
8. Fixing unit
9. Low-voltage power supply assy
10. High-voltage power supply assy
11. Paper cassette (Tray 1)
12. Pick-up rollers
13. MP tray
14. Control panel

Figure 1.5

5. STORAGE AND HANDLING OF EP-ED CARTRIDGES

An EP-ED cartridge is influenced by the storage conditions even if it is sealed in its package, so its life depends on the way in which it is used or stored. EP-ED cartridges should be handled carefully.

5.1 Storage of Sealed EP-ED Cartridges

When storing sealed EP-ED cartridges in a warehouse or workshop, the storage conditions shown in (25) Environmental conditions on Page 1-5 must be met. Follow the instructions below:

1) Avoid direct sunlight.
2) Do not store cartridges on a surface that is subject to vibration.
3) Do not hit or drop the packages containing cartridges.
4) The cartridges should be stored horizontal when they are removed from the body (with their label side upside).
5) Avoid putting the cartridges near a CRT screen, a disk or a floppy disk (to keep their data from being destroyed).

5.2 Storage of Unsealed EP-ED Cartridges

Each EP-ED cartridge contains a photosensitive drum that has an organic photoconductor (OPC) which deteriorates when exposed to strong light. It also contains toner. The user, therefore, should be fully informed about the correct storage and handling of EP-ED cartridges.

(1) Storage requirements

1) Avoid places exposed to direct sunlight or near a window. Do not leave an EP-ED cartridge in a car in warm or hot weather even if it is in its storage box.
2) Avoid places with a too-high or too-cool temperature and/or humidity. Also avoid places exposed to sudden temperature or humidity changes (such as near an air conditioner outlet).
3) Avoid dusty places or places exposed to ammonia fumes or other harmful fumes.
4) Do not store an EP-ED cartridge in a temperature above 40°C.

(2) EP-ED cartridge life

The effective life of an EP-ED cartridge is 2.5 years from the date of manufacture (printed on the cartridge.) The expiry year and month (date of manufacture plus 2.5 years) is shown on the EP-ED cartridge box. An EP-ED cartridge used after the expiry may produce low-quality printing, so a cartridge should be used within the stated period.

CHAPTER II THEORY OF OPERATION

This chapter describes the printer functions, the relationship between the electrical systems and mechanical systems, and the timing of operations. Striped conduits (▮▮▮) indicate mechanical linkages; solid thin arrows (⟶) appearing with a signal name indicate the transmission of single control signals and outlined thick arrows (⇨) indicate the transmission of groups of signals.

1. BASIC OPERATIONS

1.1 Mechanical Configuration

The printer functions can be divided into four blocks: the laser/scanner system, the image formation system, the paper pick-up/feed system and the control system.

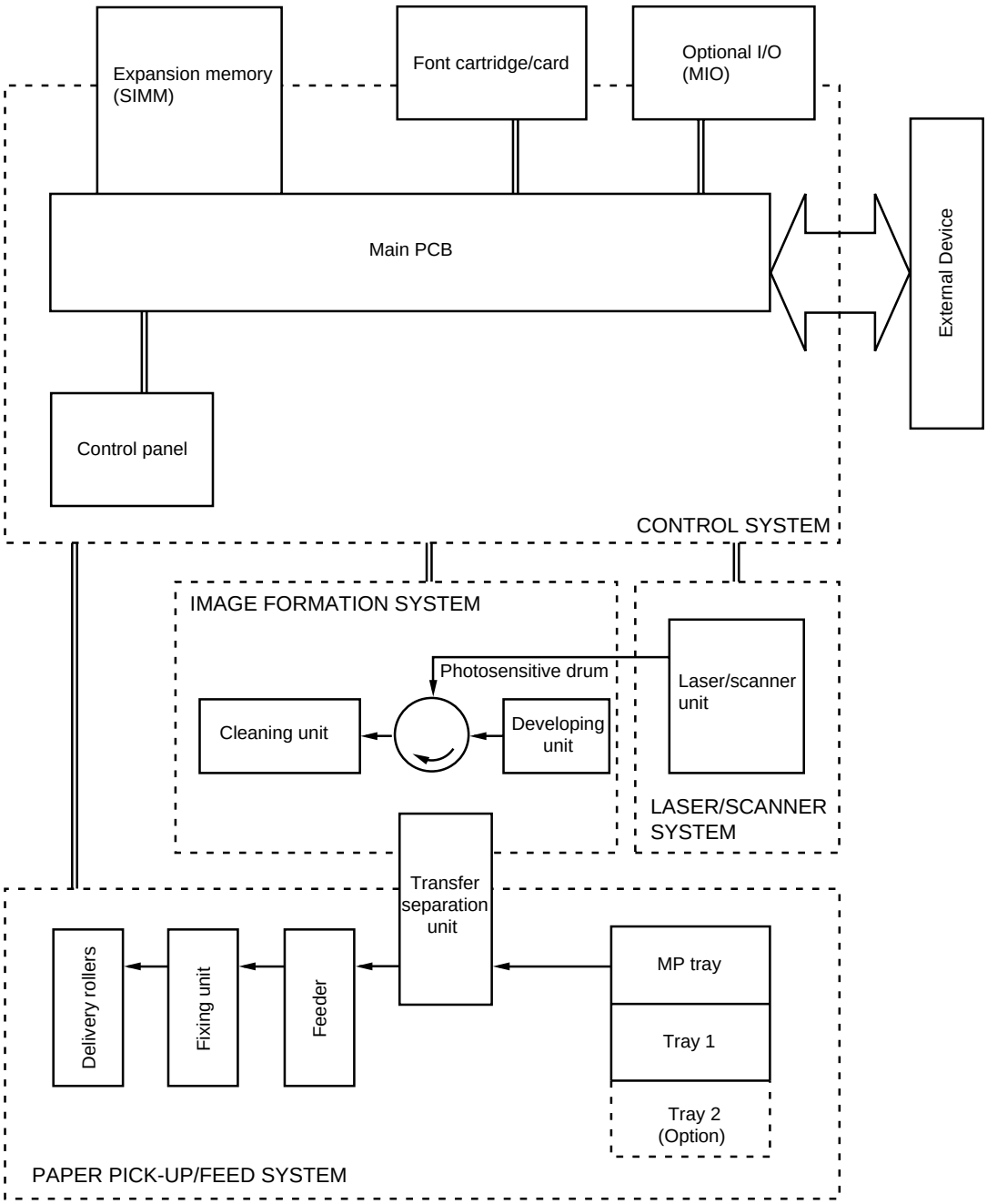

Figure 2.1

1.2 Main Drive

The power necessary for driving the printer is supplied by the main motor, the paper feed motor and the scanner motor.

The main motor is controlled by the main motor drive signal ($\overline{\text{MDRIVE}}$) output from the main PCB, and the paper feed motor is controlled by the paper feed motor drive signal output from the main PCB, and the scanner motor is controlled by the scanner motor drive signal ($\overline{\text{SDRIVE}}$) output from the main PCB.

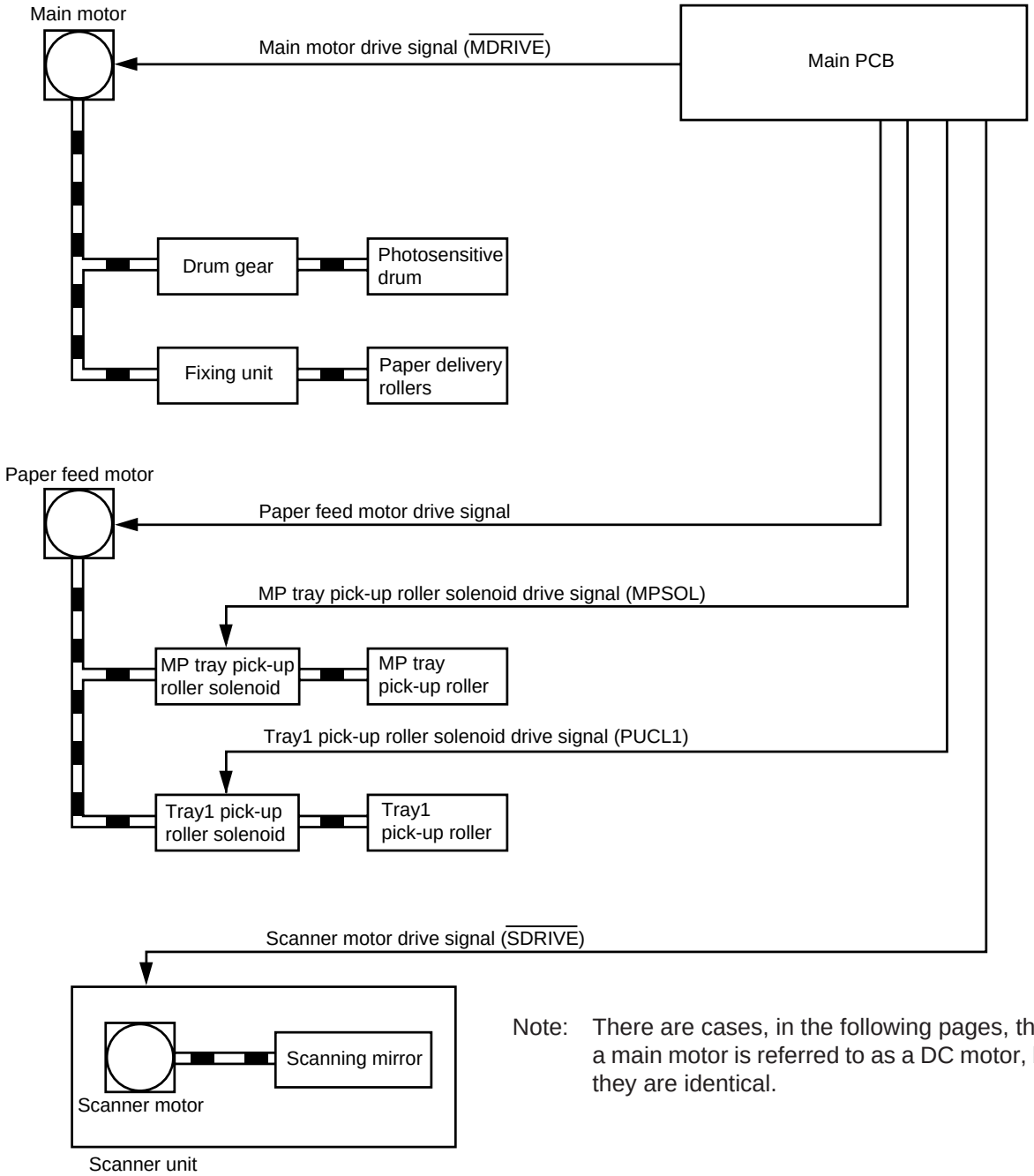

Note: There are cases, in the following pages, that a main motor is referred to as a DC motor, but they are identical.

Figure 2.2

1.3 Basic Sequence of Operations

Timing for two consecutive prints on A4 paper.

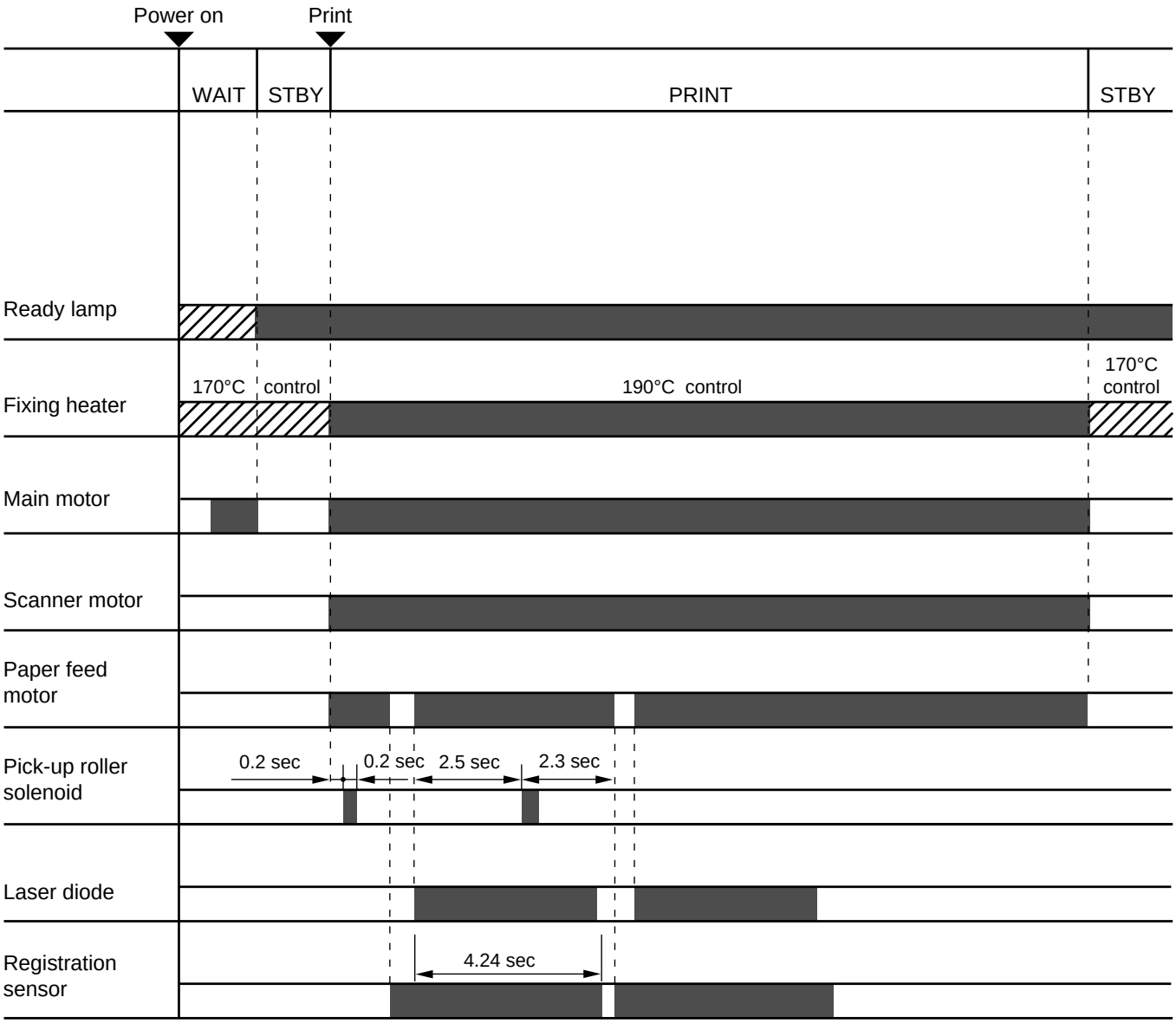

Figure 2.3

2. LASER/SCANNER SYSTEM

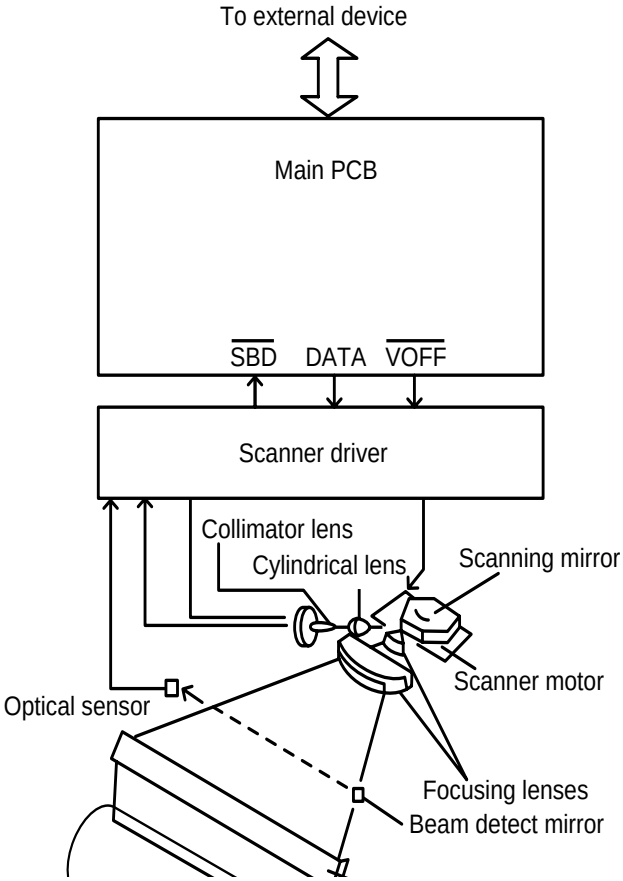

Figure 2.4

In response to the print signal transmitted from the external device, the main PCB generates the drive signals (DATA,$\overline{\text{VOFF}}$) for the laser diode and sends the signals to the scanner unit.

The laser diode in the scanner unit generates a laser beam modulated by DATA.

The modulated laser beam is aligned into a parallel beam by a collimator lens and a cylindrical lens and then brought to the scanning mirror which is rotating at a constant speed.

The laser beam reflected by the scanning mirror focuses on the photosensitive drum via the focusing lenses arranged in front of the scanning mirror.

The path of the beam coming through the focusing lenses is reflected by the reflective mirror.

As the scanning mirror rotates at a constant speed, the laser beam scans the photosensitive drum at a constant speed.

As the photosensitive drum rotates at a constant speed and the laser beam scans the drum, an images is formed on the drum.

3. IMAGE FORMATION SYSTEM

3.1 Outline

The image formation system is the main part of the printer. The print information, after input from the video controller circuit into the engine controller circuit as a TVDO signal, forms a toner image on the photosensitive drum.

Then the toner image is transferred onto the paper by the transfer charging roller. The image formation system is composed of the photosensitive drum the charging unit, the developing unit and the cleaning unit.

3.2 Printing Process

The major part of the image formation system is contained in the cartridge, as shown in Figure 2.5.

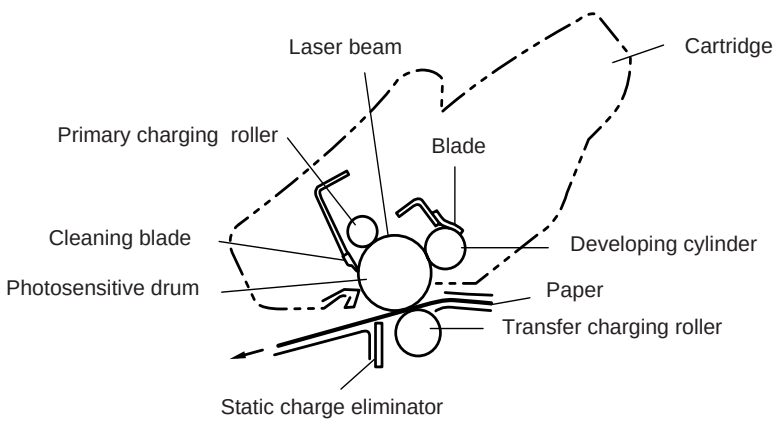

Figure 2.5

The cartridge used by the printer has a seamless photosensitive drum with the structure shown in Figure 2.6. The outer layer of the drum consists of an organic photoconductor (OPC); the base is aluminum.

The printing process can be divided into five major stages:

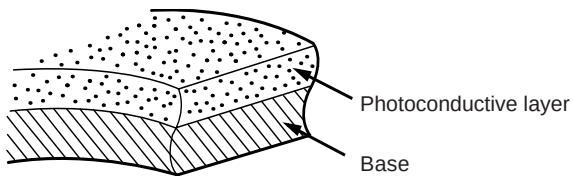

Figure 2.6

1. Electrostatic latent image formation stage
   Step 1 Primary charge (-)
   Step 2 Scanning exposure

2. Developing stage
   Step 3 Development

3. Transfer stage

   Step 4 Transfer (+)

   Step 5 Separation

4. Fixing stage

   Step 6 Fixing

5. Drum cleaning stage

   Step 7 Drum cleaning

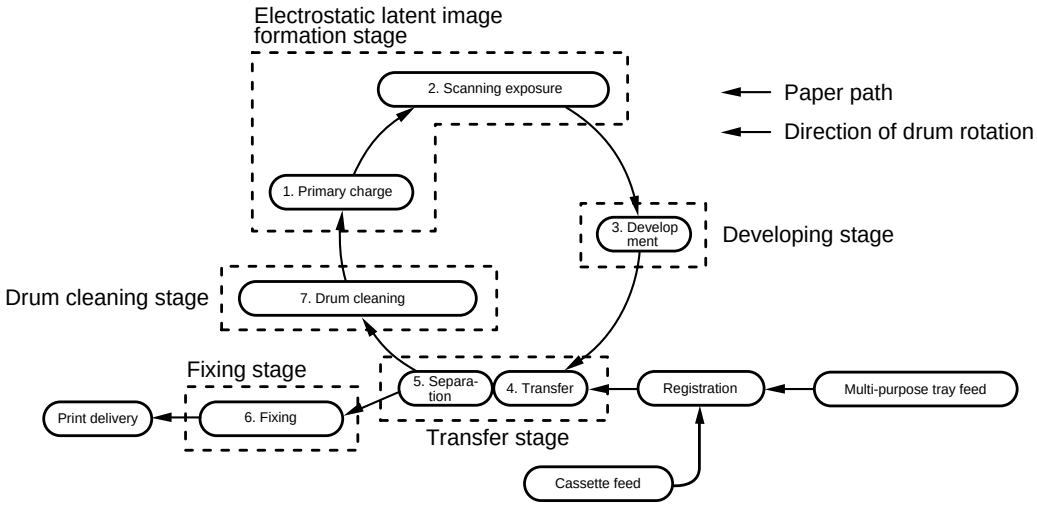

Figure 2.7

3.2.1 Electrostatic latent image formation stage

This stage has two steps, which together produce a pattern of electrical charges on the photosensitive drum.

At the end of the stage, negative charges remain in the unexposed ”dark” area. Charges are absent from the ”light” areas, where the laser beam struck (exposed) the drum surface.

Since this image of negative charges on the drum is invisible to the eye, it is called an ”electrostatic latent image”.

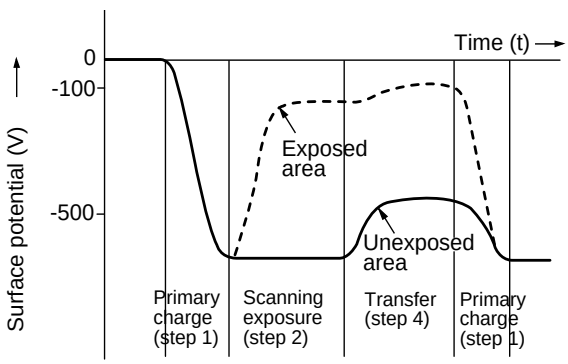

Figure 2.8

Step 1 Primary charge

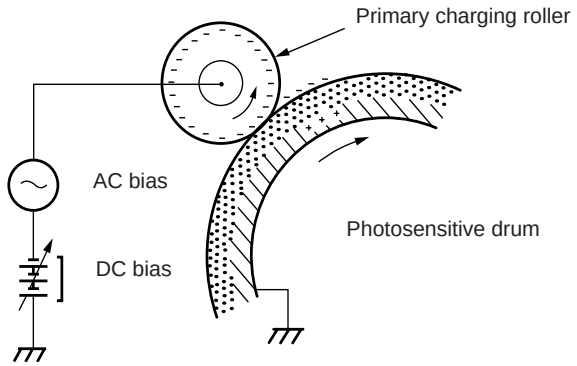

Figure 2.9

As preparation for latent image formation, a uniform negative potential is applied to the photosensitive drum surface. The printer uses the charging method that directly charges the drum for the primary charge.

The primary charging roller consists of conductive rubber. In addition to DC bias, AC bias is applied to the primary charging roller to keep the potential on the drum surface uniform. This DC bias is changed with the developing DC bias.

This charging method has advantages such as lower applied voltage, less ozone generation, etc., compared with the corona charge system.

Step 2 Scanning exposure

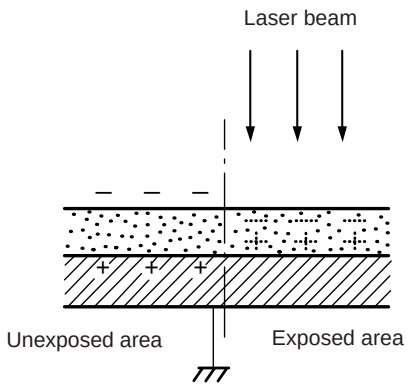

Figure 2.10

When the laser beam scans the drum surface, it causes the charge to be neutralized in the areas struck by the beam. Areas on the drum with no charge form the electrostatic latent image.

3.2.2 Developing stage

Development places particles of toner onto the areas of the drum that have been cleared of charge by the laser beam. This makes a visible image. This printer uses the toner projection development method with a single-component toner.

Step 3 Development

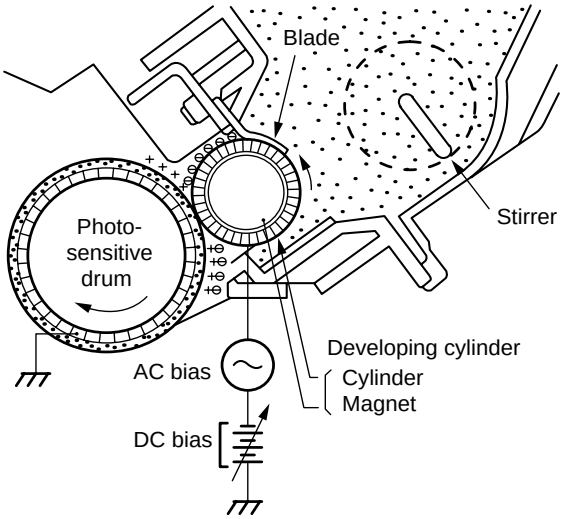

Figure 2.11

Note: The charges on the light areas on the photosensitive drum are shown as positive in this figure. Actually they are negative, but they are more positive than the developing cylinder and explanation is simplified by regarding them as positive.

As shown in Figure 2.11, the developing unit consists of a developing cylinder and rubber blade. The developing cylinder rotates around a fixed internal magnet. The single-component toner consists of magnetite and a resin binder, and is held to the cylinder by magnetic attraction. The toner is an insulator, and acquires a negative charge by friction due to the rotation of the cylinder.

The areas on the drum that were exposed to the laser beam have a higher potential (are less negative) than the negatively charged toner particles on the developing cylinder. When these areas approach the cylinder, the potential difference projects the toner particles onto them. This is called toner projection, and the latent image on the drum becomes visible.

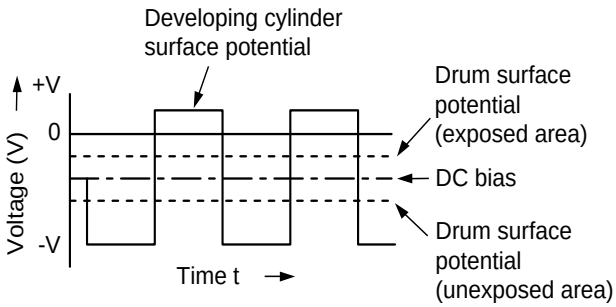

Figure 2.12

An AC bias is applied to the developing cylinder to help project the toner particles to the drum surface and improve the contrast of the printed image. The center voltage of the AC bias (1600 Vp-p) varies with the DC bias voltage.

The IMAGE DENSITY ADJUSTMENT signal (sent from the Engine CPU to the high-voltage power supply) changes the DC bias, and thus the potential difference between the cylinder and drum. This changes the density of the print.

This printer has a stirring mechanism to supply toner in the cartridge smoothly to the cylinder.

3.2.3 Transfer stage

In the transfer stage, the toner image is transferred from the drum surface to the paper.

Step 4 Transfer

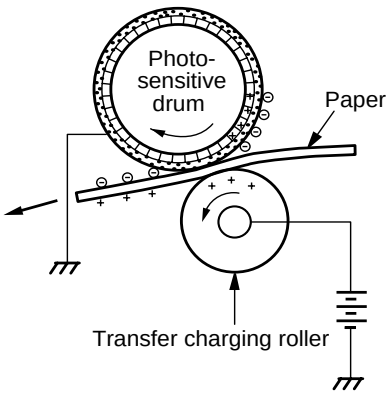

Figure 2.13

A positive charge applied to the back of the paper attracts the negatively charged toner particles to the paper. The printer accomplishes transfer by using the charging roller method. Advantages compared with the corona transfer method are as follows:

- Low transfer voltage that is less than half that for corona transfer.
- Less ozone generation.
- The paper is supported by the transfer charging roller and photosensitive drum, so feed is more stable.

Reference:

If the image on the photosensitive drum is not completely transferred to the paper due to jamming, etc., the toner may adhere to the transfer charging roller. The printer removes the toner from the transfer charging roller by switching the transfer voltage between positive and negative in sequence. During wait, initial rotation, and last rotation, the printer sets the primary DC voltage to zero, and sets the charge on the drum to zero. In this case, the transfer voltage is made negative to remove the negatively-charged toner on the transfer charging roller to the drum. The transfer charging roller is thus cleaned.

Step 5 Separation

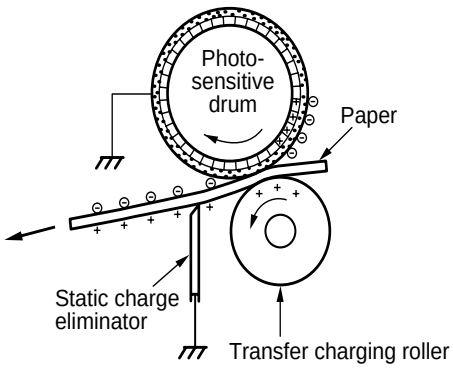

Figure 2.14

The stiffness of the paper causes it to separate from the drum. (Curvature separation)

To stabilize the paper feed and prevent small white circles from appearing in the printed image at low temperature and humidity, the charge on the back of the paper is reduced by the static charge eliminator after transfer.

3.2.4 Fixing stage

The toner image transferred to the paper in the transfer stage is held only by electrostatic attraction and slight physical adhesion, so even a light touch will smear the image.

In the fixing stage, the toner image is fixed by heating the paper and applying pressure. This fuses the toner particles to the paper to make a permanent image.

Step 6 Fixing

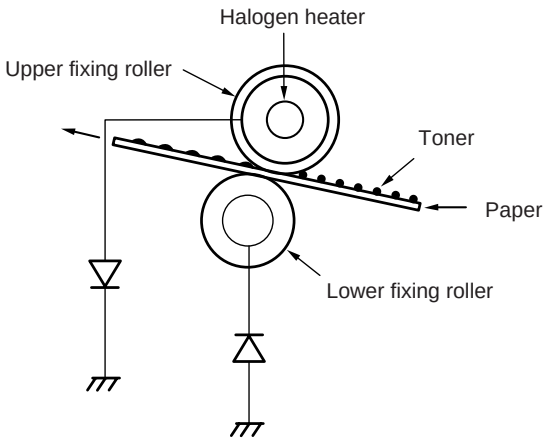

Figure 2.15

The upper roller surface is PFA-coated. The upper and lower roller surfaces are grounded via a diode to prevent the negative potential of the upper roller becoming higher than that of the lower roller, resulting in the toner being drawn to the lower roller, and adhering to the lower roller surface.

3.2.5 Drum cleaning stage

In the transfer stage, not all the toner is transferred to the paper. Some remains on the photosensitive drum. This residual toner is cleaned off in the drum cleaning stage so that the next print image will be clear.

Step 7 Drum cleaning

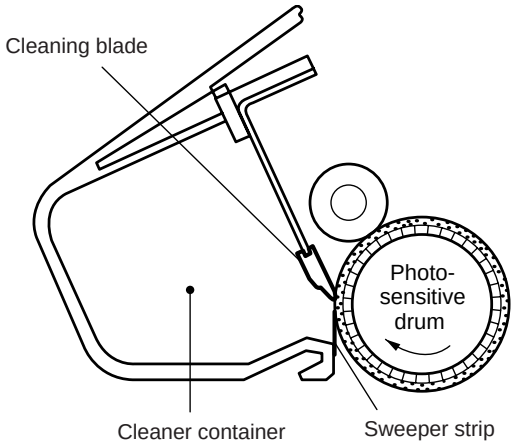

Figure 2.16

Prior to the next printing, the residual toner on the drum surface is scraped away by the cleaning blade to clean the drum surface. The removed toner is collected in the cleaner container.

3.3 Operation

When the engine controller circuit receives a print signal ($\overline{\text{PRINT}}$) or a pre-feed signal ($\overline{\text{PRFD}}$) from the video controller circuit, the engine controller circuit drives the main motor to rotate the photosensitive drum.

After the drum surface is charged negatively by the primary charge roller, the laser beam modulated by a DATA signal scans the drum surface to from a latent image on the drum.

The latent image formed on the drum surface is converted into a visible image by the toner on the developing cylinder and then image is transferred onto the paper by the transfer roller unit. Then the residual toner is removed from the drum surface with the cleaner blade.

The cartridge also has a toner sensor. When the output from this sensor falls below a certain level, it warns that the EP-ED cartridge will be out of toner with an alarm.

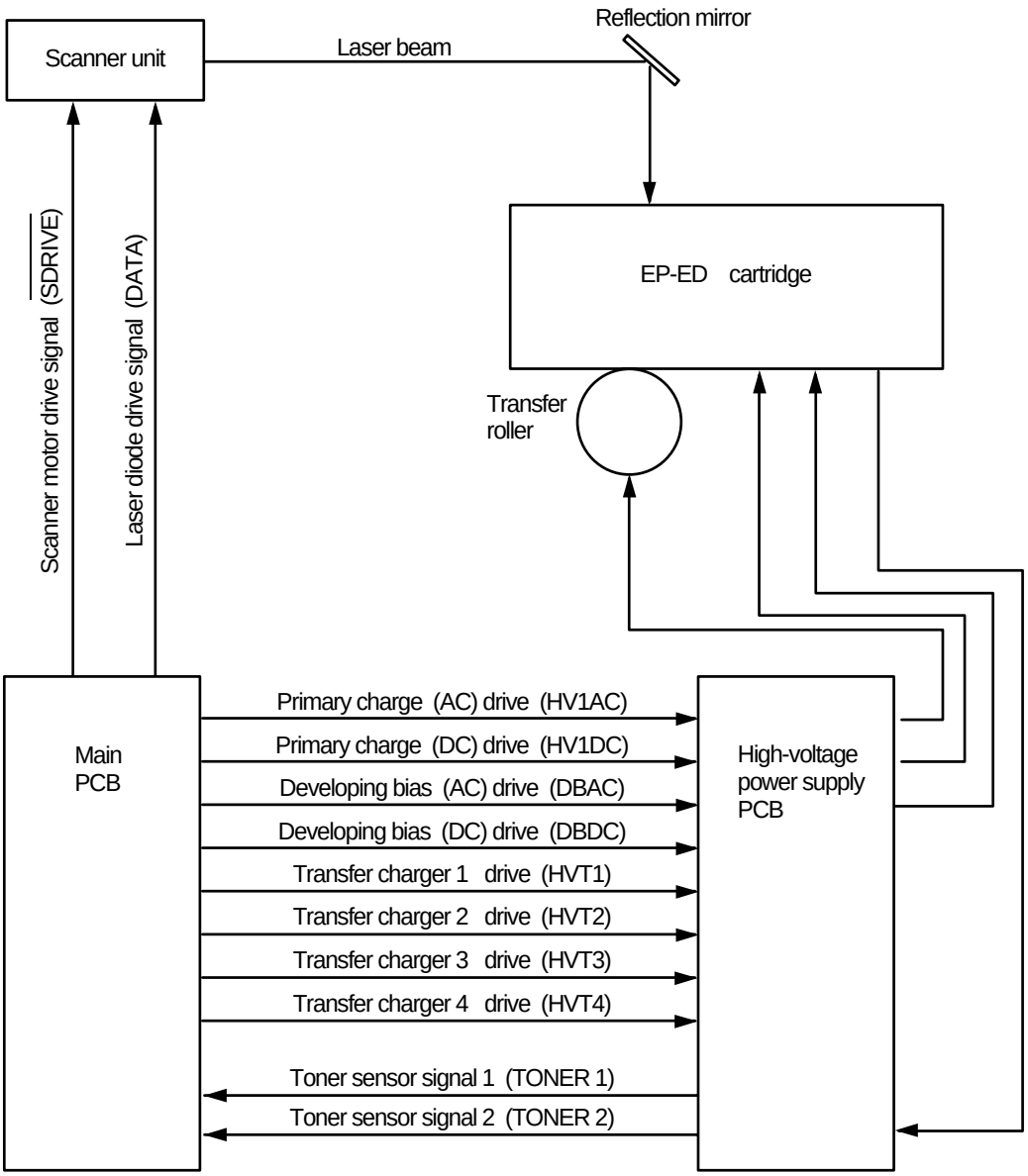

Figure 2.17

4. PAPER PICK-UP/FEED SYSTEM

4.1 Outline

If a tray1 paper pick-up roller solenoid drive signal (PUCL1) is input to the circuit while the paper feed motor is rotating, the paper pick-up solenoid comes on and the paper pick-up roller solenoid is engaged. As a result, the paper pick-up roller rotates to feed paper down to the photosensitive drum.

The paper position is controlled by the registration sensor so that the leading edge of the paper is aligned with the leading edge of the image on the photosensitive drum. After this operation, the paper is deliveried to the face down tray via the fixing unit. Paper ejection is detected by the paper ejection sensor; if printed paper has not reached or not cleared the paper ejection sensor in a specified time, the printer judges that a paper jam has occurred. In this case a paper jam is noticed to the external devise by a status signal.

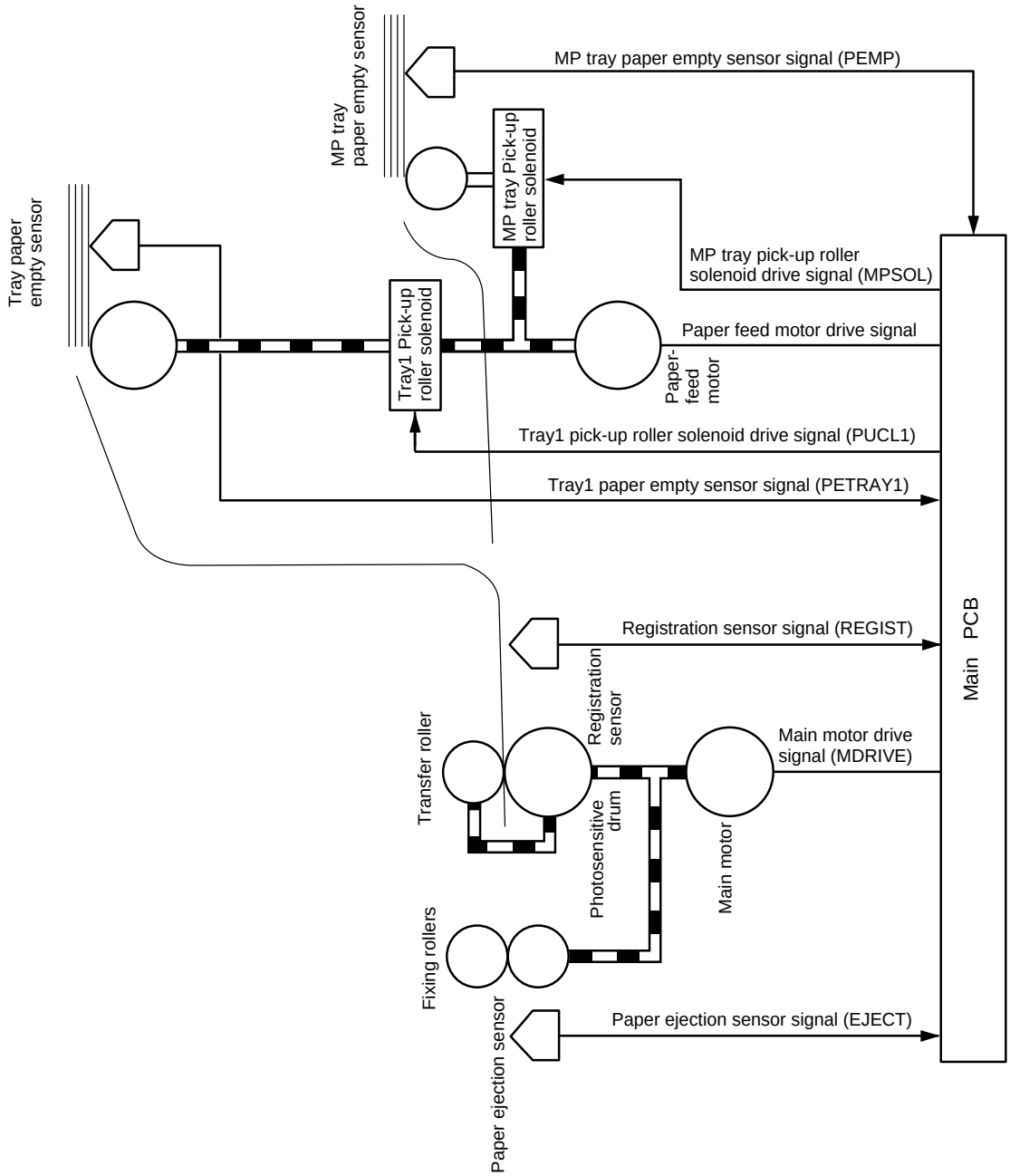

Figure 2.18

4.2 Cassette Feed

When the fixing rollers reach the specified temperature while a cassette with paper is in the printer, the READY lamp changes from flashing to lighting.

When the engine controller circuit receives $\overline{\text{PRNT}}$ or $\overline{\text{PRFD}}$ signal from the video controller circuit, the paper feed motor starts rotation. About 0.2 seconds later, the printer actuates the tray1 pick-up roller solenoid and the pick-up roller makes one rotation. This feeds paper to the photosensitive drum.

Timing chart for the pick-up one sheet

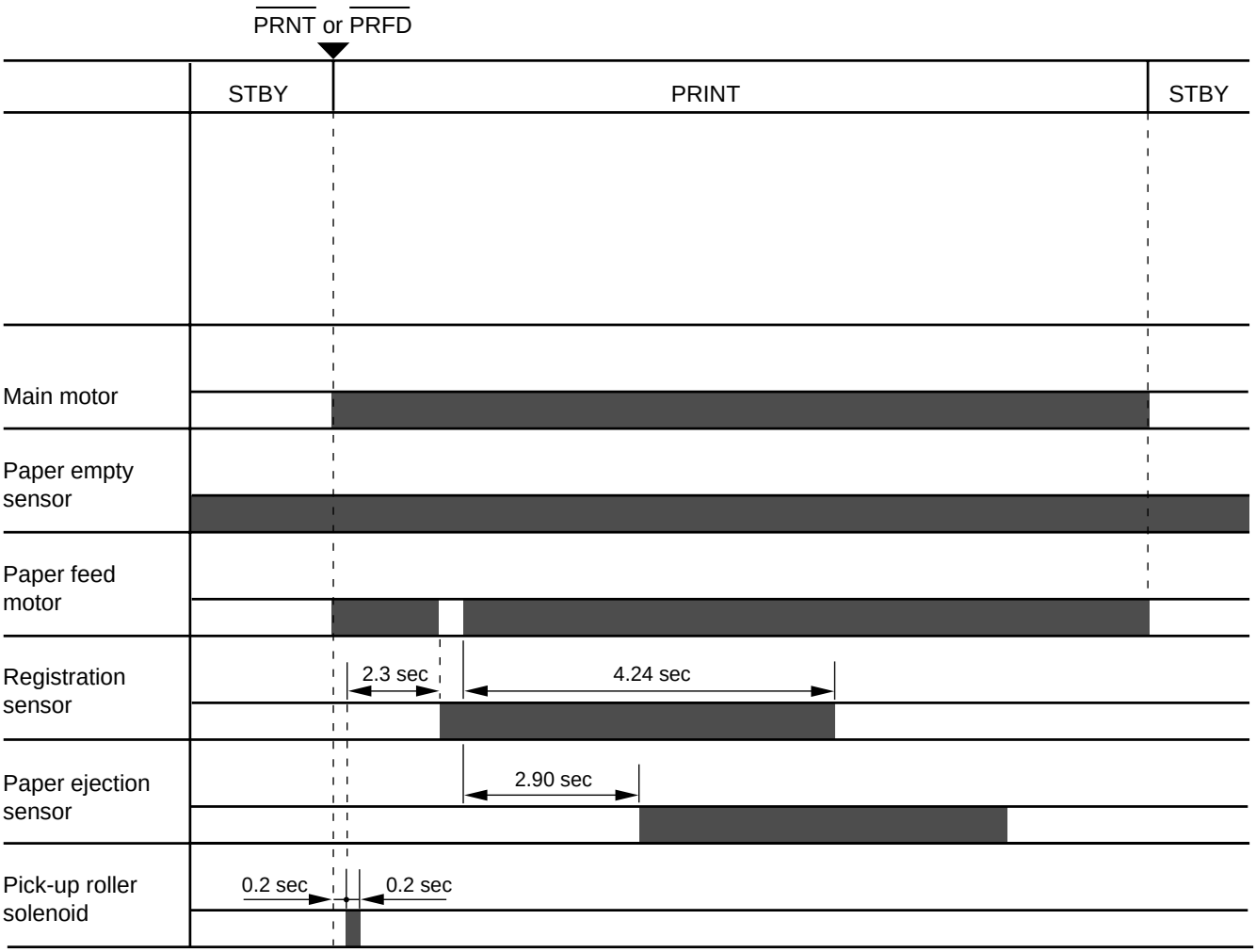

Figure 2.19

4.3 MP Tray Feed

The timing of the MP tray feed is identical to the timing of the cassette paper feed except for the following points:

(1) The paper empty sensors are different.

Cassette feed : Tray1 paper empty sensor

MP tray feed : MP tray paper empty sensor

(2) The pick-up roller solenoids are different.

Cassette feed : Tray1 pick-up roller solenoid

MP tray feed : MP tray pick-up roller solenoid

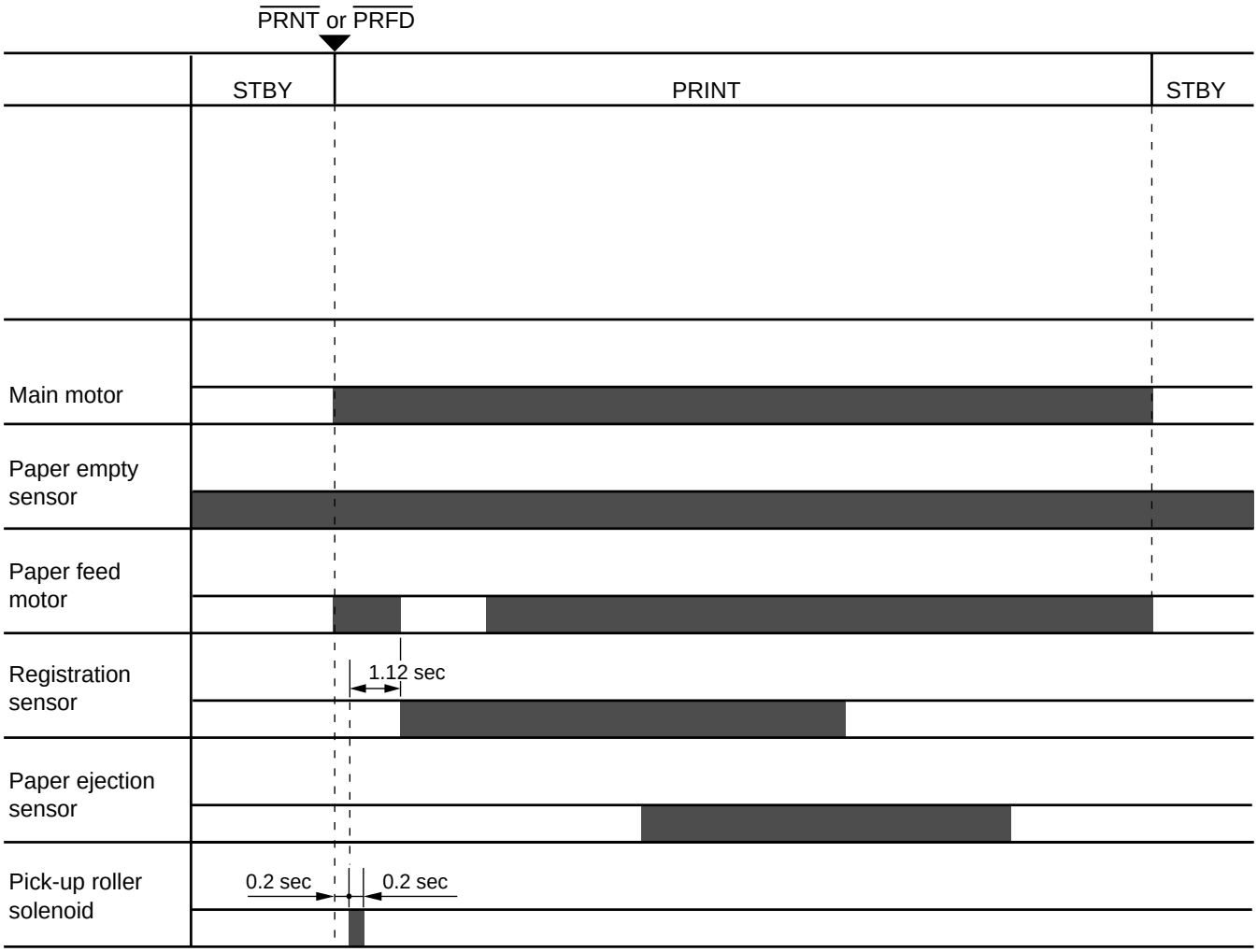

Figure 2.20

4.4 Paper Jam Detection

The printer has a registration sensor and a paper eject sensor at the paper outlet to detect whether the printed paper has been fed correctly. A paper jam is detected by whether the paper is present at the sensor at the check periods programmed in the engine CPU memory. If the engine CPU detects a paper jam, the main motor, paper feed motor and scanner motor is turned off immediately and the jam status is transmitted to the video controller circuit.

A paper jam is detected in any of following conditions:

1) Paper exists at the paper ejection sensor or the registration sensor when power is switched on. (JAM REAR or JAM INSIDE)
2) Paper has not reached the registration sensor within a specified time (JAM TRAYS).
3) Printed paper has not passed through the registration sensor within a specified time (JAM INSIDE (1)).
4) Printed paper has not reached the paper ejection sensor within a specified time (JAM INSIDE (2)).
5) Printed paper has not passed through the paper ejection sensor within a specified time (JAM REAR).

Jam tray

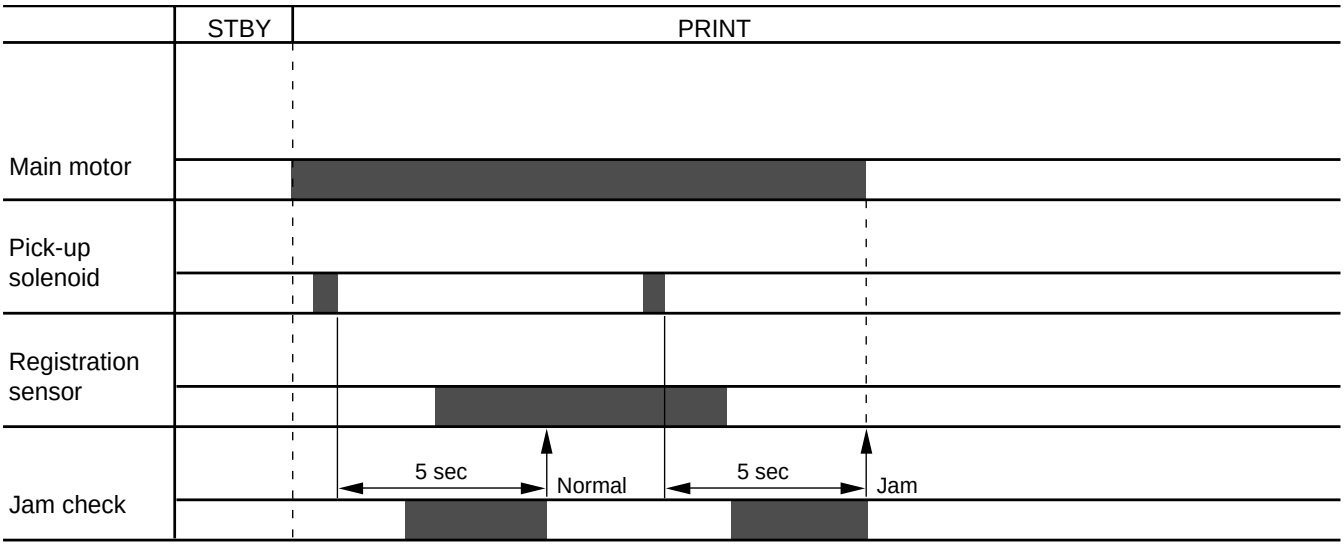

Figure 2.21

Jam inside (1)

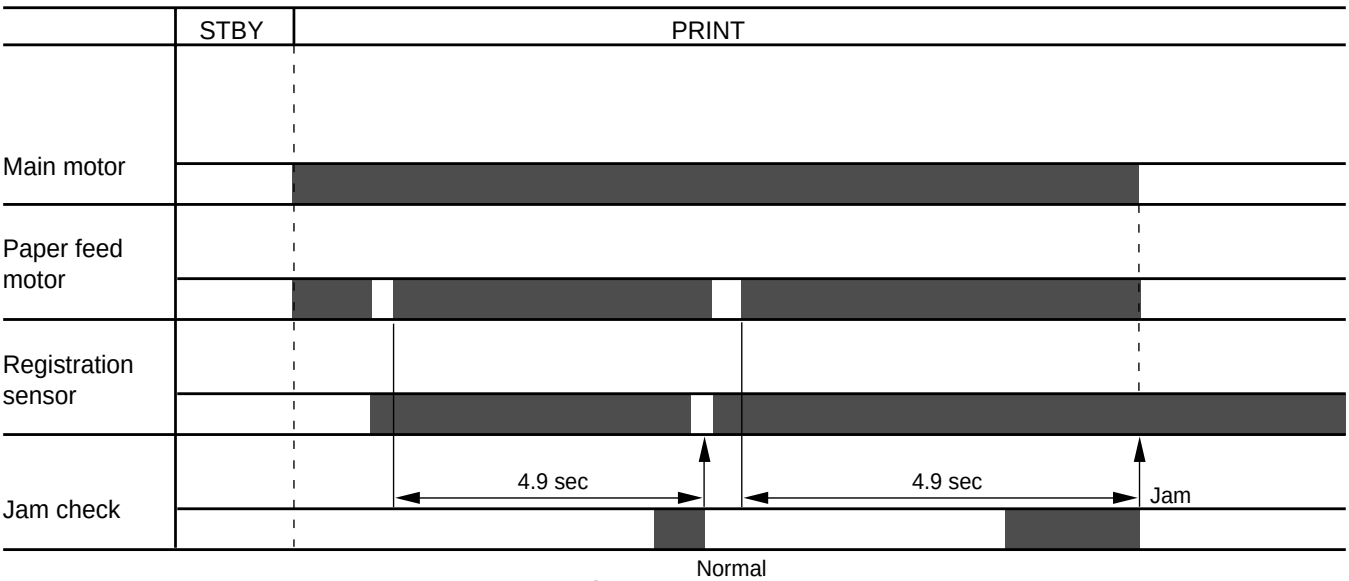

Figure 2.22

Jam inside (2)

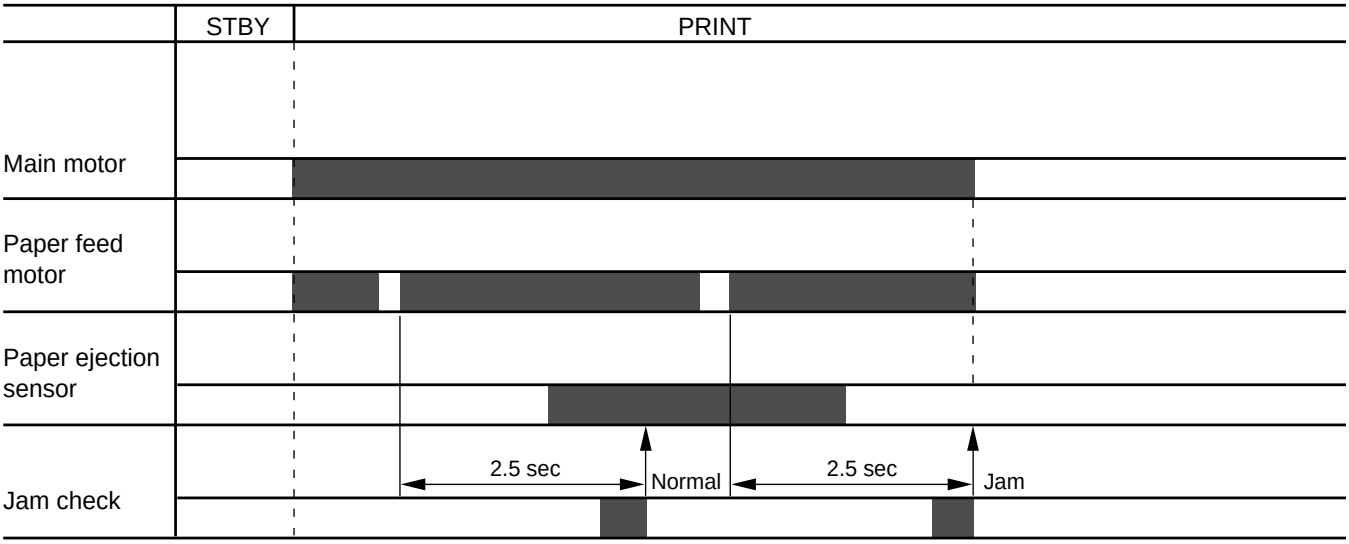

Figure 2.23

Jam rear

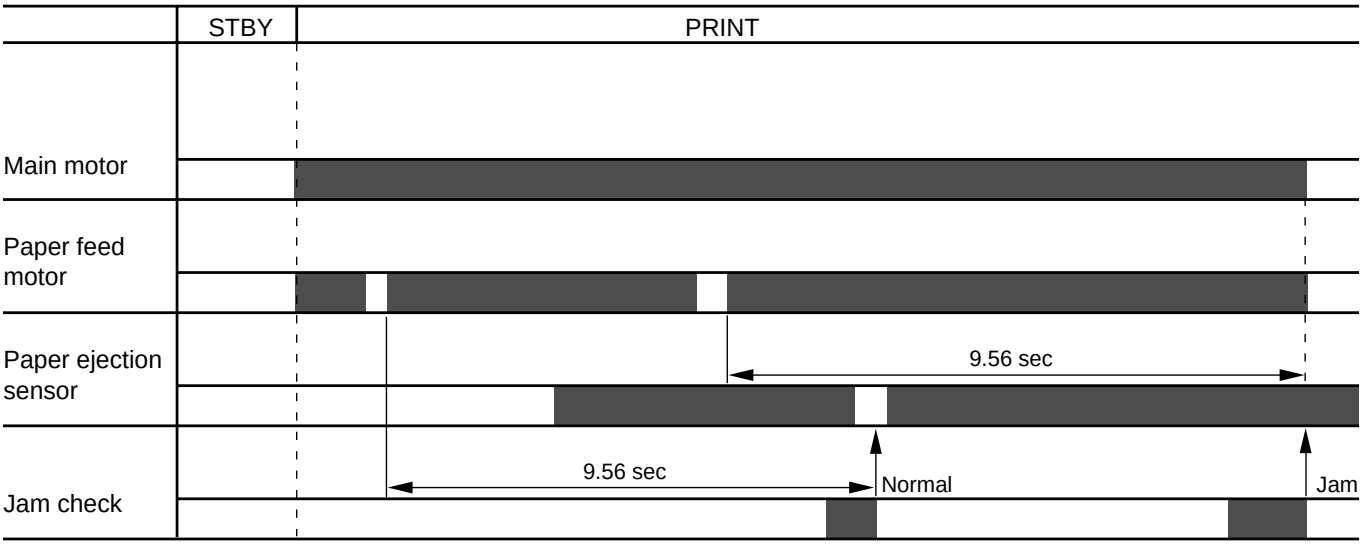

Figure 2.24

CHAPTER III ELECTRICAL SYSTEM

Electric signal levels are expressed by ”High” (approximate the supply voltage) or ”Low” (approximate 0V). Signals with hyphen or slash, such as -FSRD or FSRD/, are low-active and signals without hyphen or slash, such as FSRD, are high-active signals.

1. MAIN PCB

1.1 Outline

The Main PCB consists of the Video Controller Circuit and the Engine Controller Circuit.

The Video Controller Circuit performs the following functions.

(1) Converts data received from an external device, such as a personal computer, through Centronics parallel interface or RS-232C serial interface into video data and transfers it to the Engine controller circuit.

(2) Displays the current printer status in LED and LCD, and enables settings from the control panel.

The operation sequence of the printer controlled by a microprocessor in the Engine Controller Circuit. The Engine Controller Circuit outputs signals to drive the various loads on the laser diode, scanner motor, main motor, etc. according to the print commands and image data from the external device.

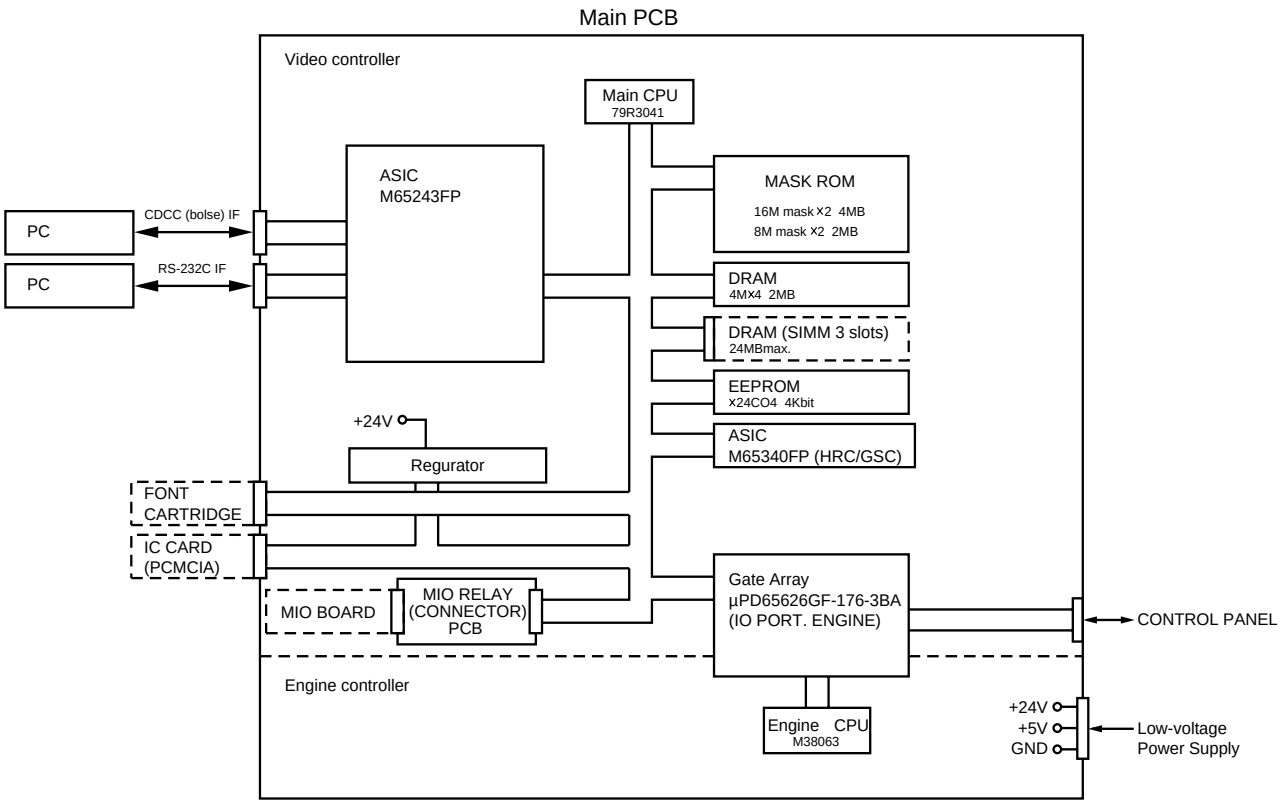

Figure 3.1 Main PCB Block Diagram

1.2 Video Controller Circuit

(1) CPU block

CPU(#26) IDT79R3041-20J manufactured by Integrated Device Technology

RISC chip

Clock speed: 19.6608 MHz

Appearance: 84-pin PLCC

(2) ASIC/Gate Array Block

- #32 M65243FP(Mitsubishi) - 208-pin QFP

  Controls the address decoder, timers and interfaces (Centronics and RS-232C).
- #6 M65340FP(Mitsubishi) 80-pin QFP

  Controls HRC(High Resolution Control), GSC(Gray Scale Control) and economy mode.
- #3 µPD65626GF-176-3BA(NEC) - 100-pin QFP

  Controls the I/O ports and others.

(3) Font Cartridge/Card Block

- Font cartridge (option)

  The font cartridge has a 32MB memory area and is controlled by the 16-bit bus.

  The address bus a buffer LS244 and the data bus, a buffer LS245.
- Font Card (option)

  The font card has a 32MB memory area and is controlled by the 16-bit bus.

  The card is supplied with 12V power because the flash card requires 12V power supply when writing or erasing data.

  The address bus is buffered by LS244 and the data bus, is buffered by LS245.

(4) Centronics/RS-232C interface block

- Centronics parallel interface

  Data transmission and reception are controlled by the M65243FP (#32).
- RS-232C

  Data transmission and reception are controlled by the M65243FP (#32).

  The ADM202JRN (#38) serves as driver/receiver.

(5) SIMM block

- SIMM (Single-Inline-Memory-Module) allows memory extension up to 26MB
- 3 SIMM sockets are available.
- SIMM should be of 72-pin type and its access time should be less than 70 ns.
- 4 types of SIMM (1MB, 2MB, 4MB and 8MB) can be combined:

  1MB MH25632BJ-7 (MITSUBISHI), HB56D25632B-7A (HITACHI)

  2MB MH51232BJ-7 (MITSUBISHI), HB56D51232B-7A (HITACHI)

  4MB MH1M32EJ-7 (MITSUBISHI), HB56A132BT-7A (HITACHI)

  8MB MH2M32EJ-7 (MITSUBISHI), HB56A232BT-7A (HITACHI)

1) The SIMMs have its printed marking on the PCB by silk screen: SLOT1, SLOT2 and SLOT3, respectively. The SIMMs should be set in the order of SLOT1 - SLOT3.

2) SIMMs should be set in the order of its memory size and in the order of SLOT No.

   Example: 3 SIMMs: 1MB, 2MB and 4MB

   SLOT1 - 4MB

   SLOT2 - 2MB

   SLOT3 - 1MB

3) The attached Printer SIMM map shows the memory map for 4 SIMMs combined.

(6) ROM block

ROMs store the CPU control program and font data. ROMs are two 16Mbit masked ROMs and two 8Mbit masked ROMs.

Optional sockets are available for two 8Mbit EPROM (µPD27C8000DZ-120 - NEC or equivalent) for expansion.

ROM access time should be less than 120nsec.

8Mbit EPROMs can be used instead of a 16Mbit masked ROM. To allow this substitution, the soldering points SP5, SP6 and SP7 should be soldered and the cutting points CP2, CP3 and CP4 should be cut.

(7) DRAM block

DRAMs are used for receiving buffer or working area of the CPU. The DRAM block contains four 4Mbit DRAMs, thus having 2MB memory capacity in total.

The refreshing method is CBR (Cas Before Ras).

DRAM access time should be less than 80nsec.

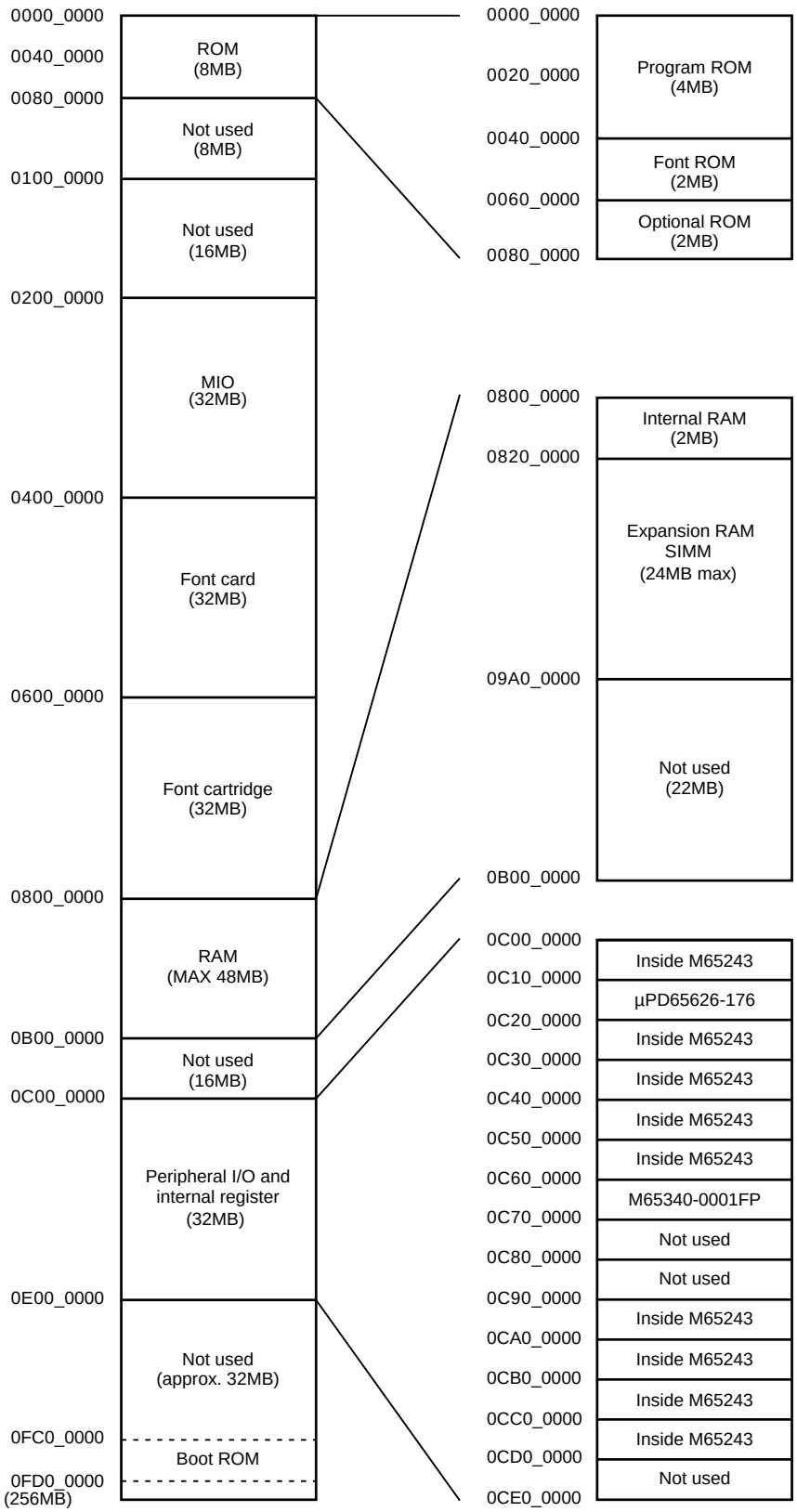

Figure 3.2 Memory map

ADDRESS	1	2	3	4	5	6	7	8	9	10	11	12	13	14	15	16	17	18	19	20	21
0820 0000	NONE																				
		1MB																			
0830 0000																					
		1MB	2MB	2MB	2MB																
0840 0000																					
		1MB	1MB			4MB	4MB	4MB	4MB	4MB	4MB										
0850 0000																					
			1MB	2MB	2MB																
0860 0000																					
				1MB		1MB							8MB	8MB	8MB	8MB	8MB	8MB	8MB	8MB	8MB
0870 0000																					
					2MB	1MB	2MB	2MB													
0880 0000																					
							1MB		4MB	4MB	4MB										
0890 0000																					
								2MB													
08A0 0000																					
									1MB			1MB									
08B0 0000																					
										2MB			2MB	2MB							
08C0 0000												1MB									
											4MB				4MB	4MB	4MB				
08D0 0000													1MB								
														2MB							
08E0 0000																					
																		8MB	8MB	8MB	8MB
08F0 0000															1MB						
																2MB					
0900 0000																					
																	4MB				
0910 0000																					
0920 0000																					
																		1MB			
0930 0000																					
																			2MB		
0940 0000																					
																				4MB	
0950 0000																					
0960 0000																					
																					8MB
0970 0000																					
0980 0000																					
0990 0000																					
09A0 0000																					

Figure 3.3 SIMM map

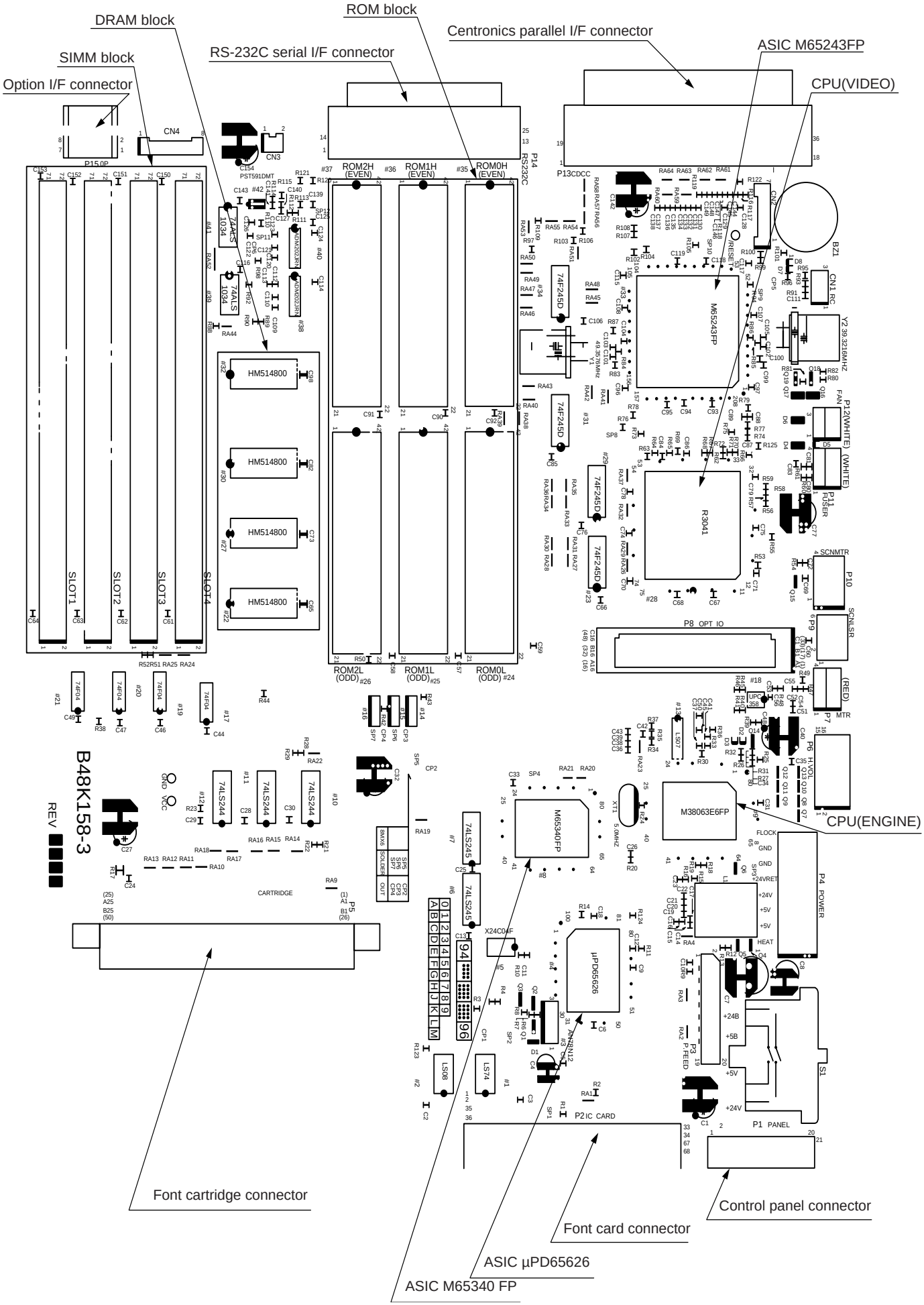

Figure 3.4 Main PCB

1.3 Engine Controller Circuit

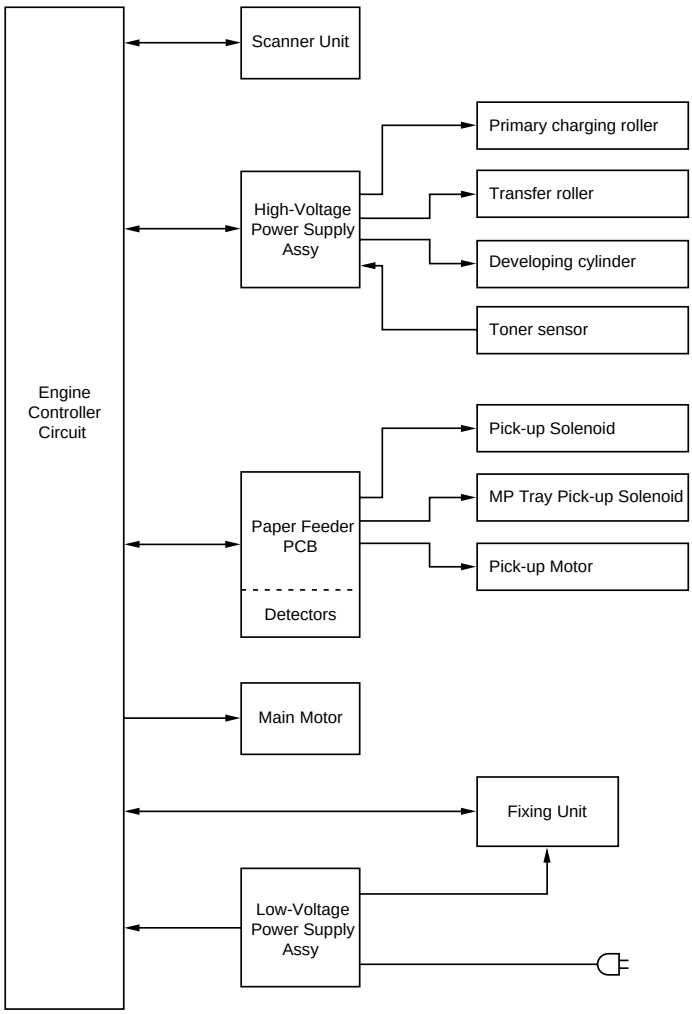

Figure 3.5 Engine Controller Block Diagram

Components in the Circuit (refer to the next page)

A. Engine Control CPU
B. Low-Voltage Power Supply Connector
C. Fuser Unit Control
   C-1. Heater Drive Circuit
   C-2. Heater Temperature Input Signal
   C-3. Paper Eject Input Signal
D. Paper Feeder PCB Control Signals and Connector
E. Option Interface Circuit and Connector
F. High-Voltage Power Supply Control Circuit and Connector
G. Scanner Unit Control
   G-1. Scanner Motor Control Circuit
   G-2. Laser Diode Drive PCB Control Circuit
H. Fan Motor Drive Circuit
I. Main Motor Control Circuit
J. Cover Open Detect Circuit
K. Safety Door Switch Circuit

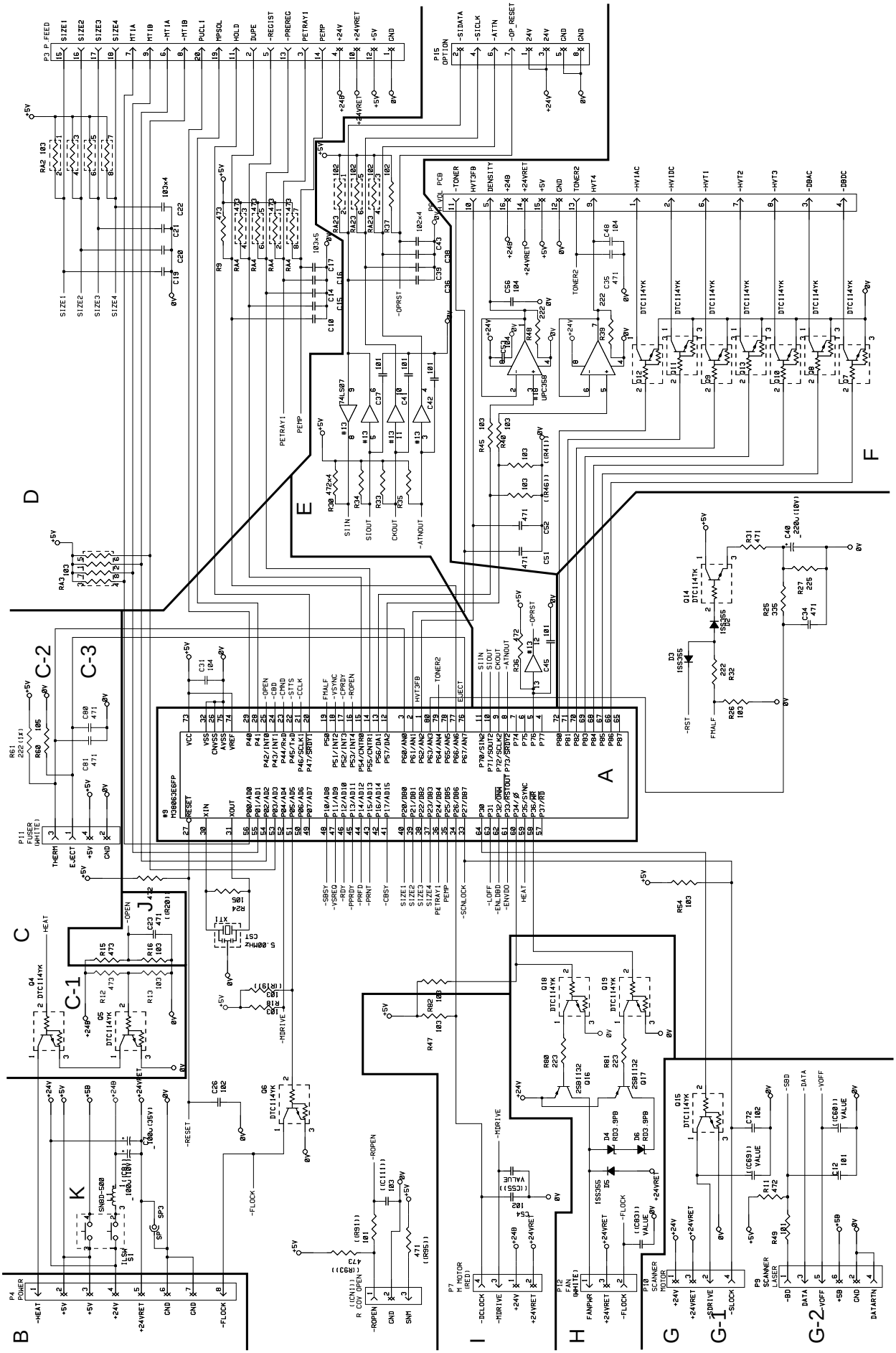

Figure 3.6 Main PCB Circuit

2. PAPER FEED DRIVE CIRCUIT

A. Connector to Main PCB
B. Pick-up Motor Drive Circuit and Connector
C. Pick-up Solenoid Drive Circuit and Connector
D. Multi Purpose Tray Pick-up Solenoid Drive Circuit and Connector
E. Sensors
   E-1. Tray1 Paper Empty Sensor
   E-2. Multi Purpose Tray Paper Empty Sensor
   E-3. Regist Sensor
   E-4. Pre-Regist Sensor
   E-5. Paper Detect Sensor in Duplex Unit
F. Tray1 Paper Size Detect Switches

Refer to the next page.

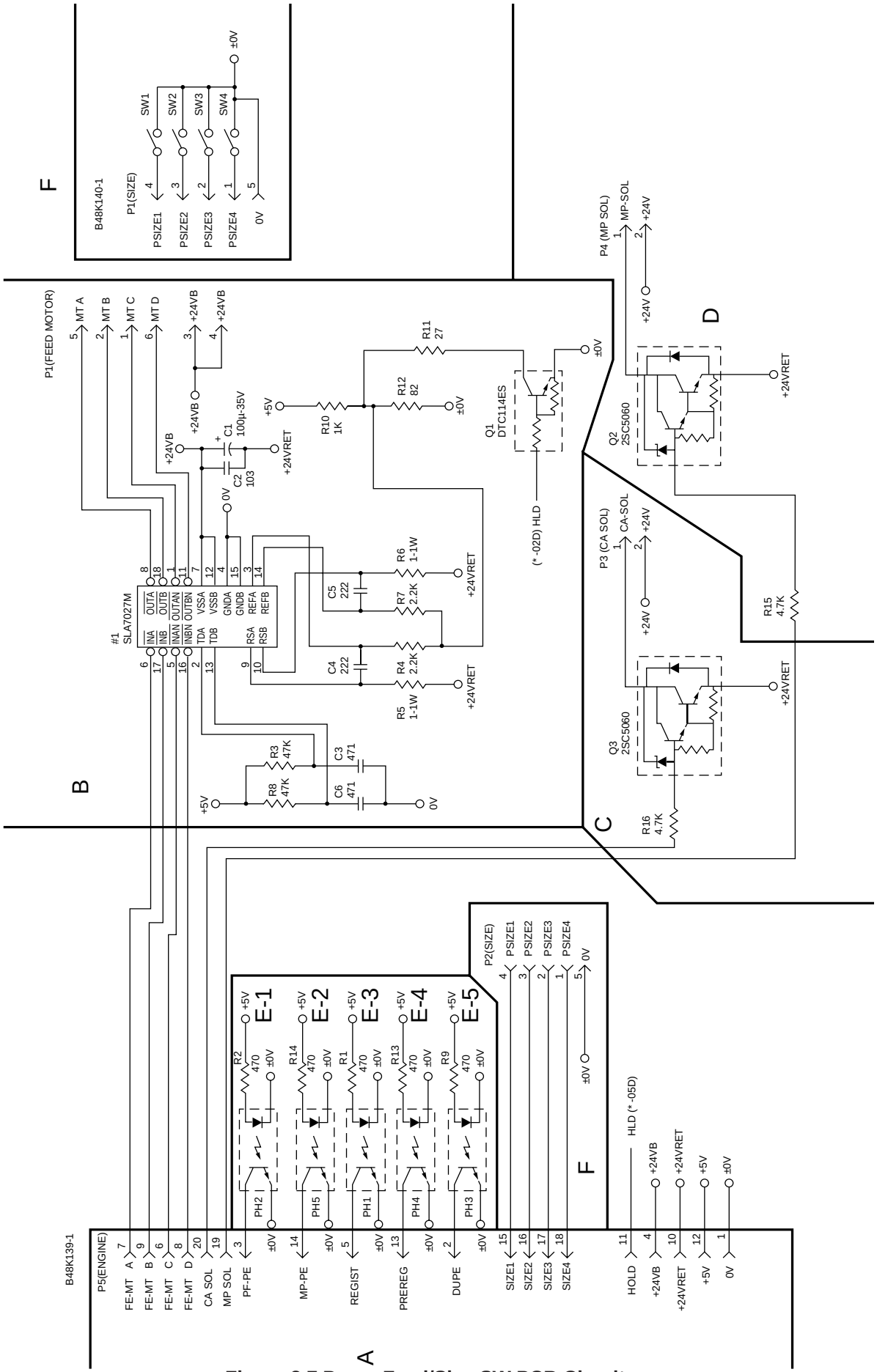

Figure 3.7 Paper Feed/Size-SW PCB Circuit

3. DISPLAY CIRCUIT

3.1 Outline

The control panel of this printer has four LED lamps, one LCD display, and eight switches. The control panel is connected to the Main PCB and its functions are as follows:

(1) The LCD shows the printer status and error message in alpha-numeric characters.

(2) The LED lamps indicate the operating conditions of the printer.

(3) The printing mode and LCD brightness can be changed by switches.

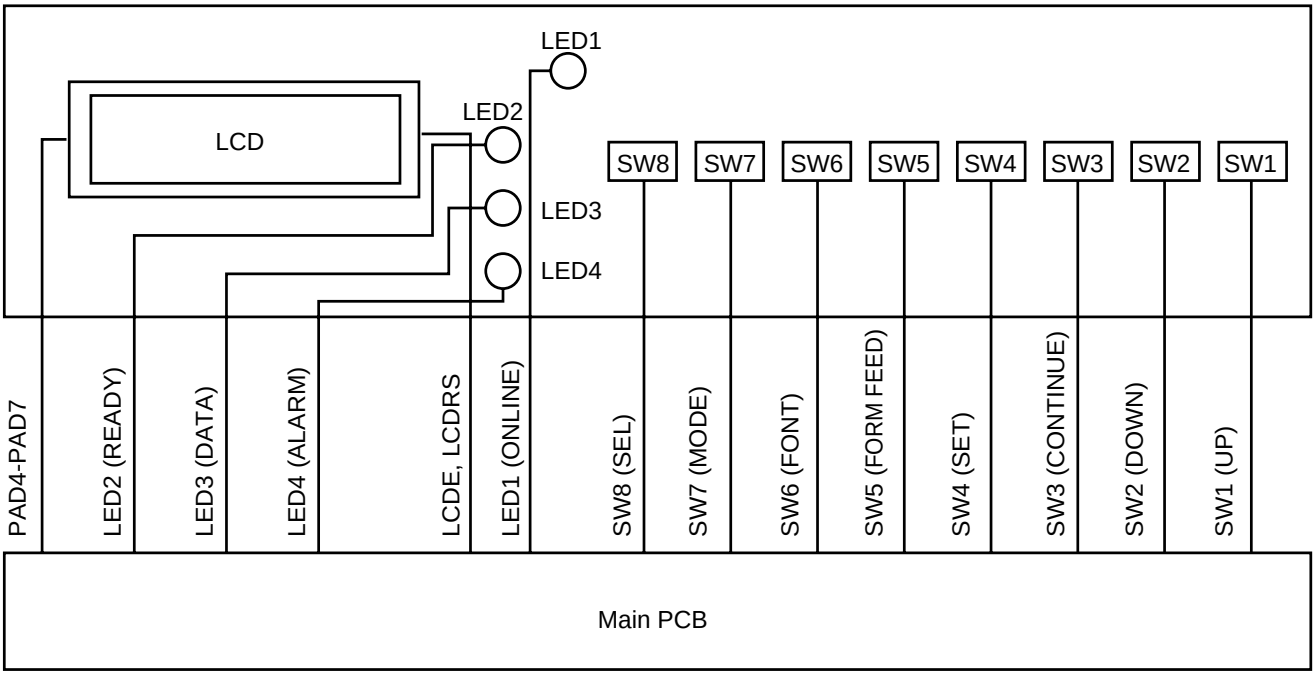

Figure 3.8 Display Circuit

3.2 Operation

Indicators on the control panel (LED lamps and LCD) are controlled by the video controller circuit.

All the switch signals are input to the video controller circuit.

Signals Descriptions:

LED1 - LED4	On-off control for the respective LED lamps.
	Illuminating when Low and extinguished when High.
PAD4 - PAD7	LCD control signal.
LCDRS	A signal to distinguish PAD4 - PAD7 into command and data.
LCDE	A signal to start the operation.
SW1 - SW8	Input signals from the switches.
	Going Low when each switch is pressed.

4. LOW-VOLTAGE POWER SUPPLY ASSY

4.1 Outline

The low-voltage power supply assy consists of the low-voltage generating block (hereinafter the DC block) and the heater drive circuit block to turn the heater on (hereinafter the AC block).

When the power switch (SW1) is turned on, AC power is supplied to the low-voltage power supply assy.

The DC block generates +5 VDC, and +24 VDC.

When the heater is turned on, AC power is supplied to the AC block under control of the heater on-off signal from the engine controller.

+24V output is reserved in the DC block, for the cooling fan for the low-voltage power supply assy.

4.2 Protection Functions

Each of the power supply circuits, +5V, and +24V, has a protection function to prevent the circuit from accident by automatically cutting off the power supply in the case of a over-voltage or over-current of the load.

When the cooling fan stops to rotating, an over-voltage protection or a short-circuit protection function is activated, and all the DC power supplies are cutoff.

In this case check and clear the cause on the load after turning the power switch (SW1) off, and then switch the power on again at least one minute after the power shut-down.

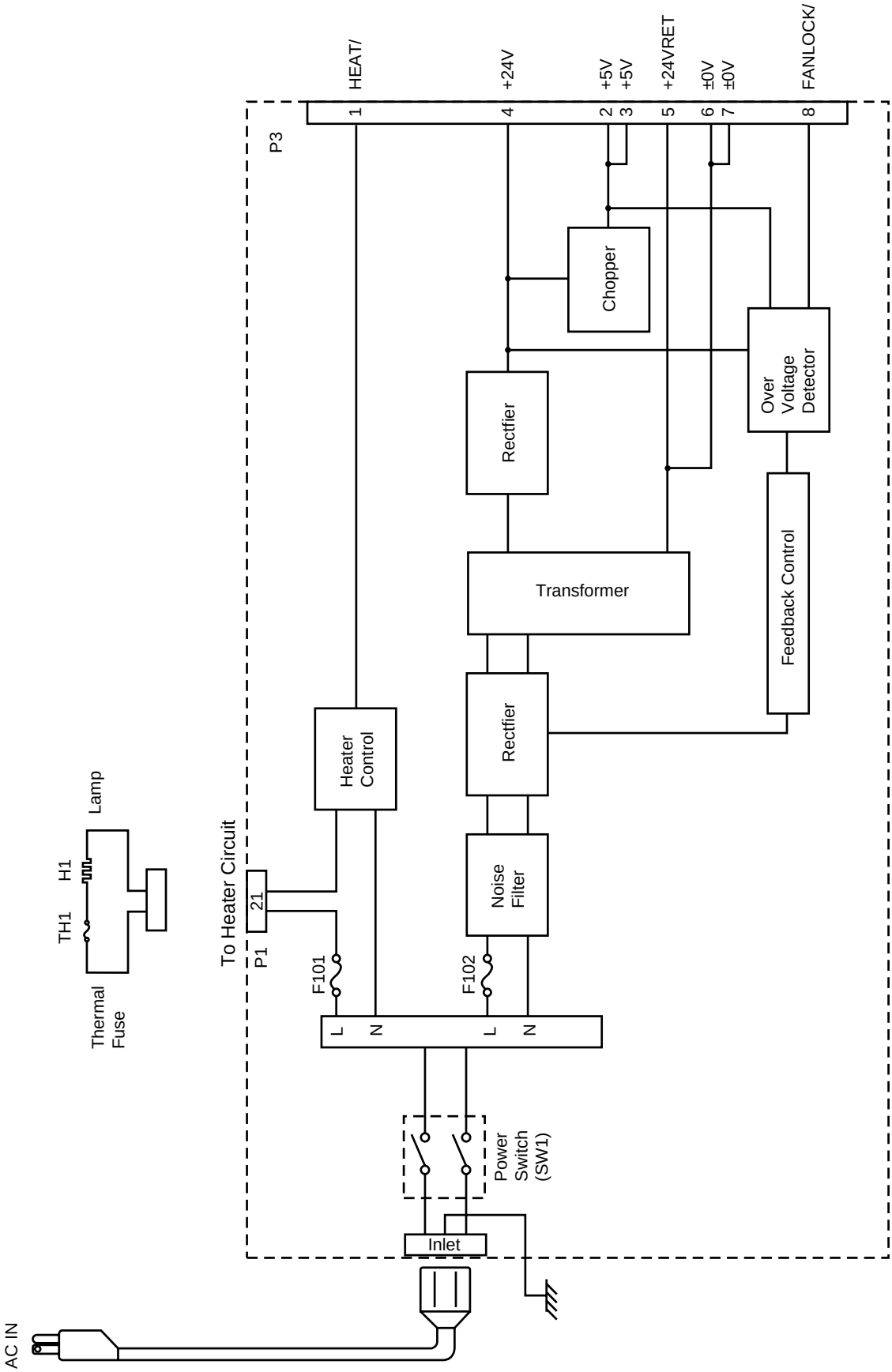

Figure 3.9 Low-Voltage Power Supply PCB Block Diagram

5. HIGH-VOLTAGE POWER SUPPLY ASSY

5.1 Outline

The High-Voltage Power Supply Assy supplies the high-voltage for the charging roller, the developer cylinder and the transfer roller according to the engine CPU's control signals.

The block diagrams are shown Fig 3.10 and 3.11.

5.2 Operation of the Components of the High-Voltage Power Supply Assy

(1) Primary charging

When input signal/HV1AC gets the Low level, the primary high-voltage AC is applied to the primary charging roller. And when input signal/HV1DC gets the Low level, the primary high-voltage DC is applied to the primary charging roller. The primary high-voltage DC changes with developer bias DC according to values of the input signal DNSTY which is for print density adjustment.

(2) Developer bias

When input signal/DBAC gets the Low level, the developer bias AC is applied to the developer cylinder. And when input signal/DBDC gets the Low level, the developer bias DC is applied to the developer cylinder. The developer bias DC changes according to values of the input signal DNSTY which is for print density adjustment, like the primary high-voltage DC.

(3) Transfer charging

Transfer bias is controlled by the input signals HVT1 - 4 and HVTFB. When the input signal/HVT1 gets the Low level, negative high-voltage is applied to the transfer roller. When the input signal/HVT2 gets the Low level, positive high-voltage is applied to the transfer roller. When the input signal/HVT3 gets the Low level, positive high-voltage about 1100 times that of the input signal HVT4 is applied to the transfer roller. The input signal HVTFB has voltage about 1/1100 times the positive voltage generated on the transfer roller. Once the engine CPU is informed of this voltage, the bias applied to the transfer roller can be known.

Note: The HVT2 signal generates high-voltage irrespective of the HVT4 signal.

(4) Toner sensing

Voltage levels of the input signals TONER1 and TONER2 allow the engine CPU to check if the cartridge is set or not and if toner is empty. The TONER1 carries the voltage generated at the toner sensor and the TONER2 carries the developing bias output value.

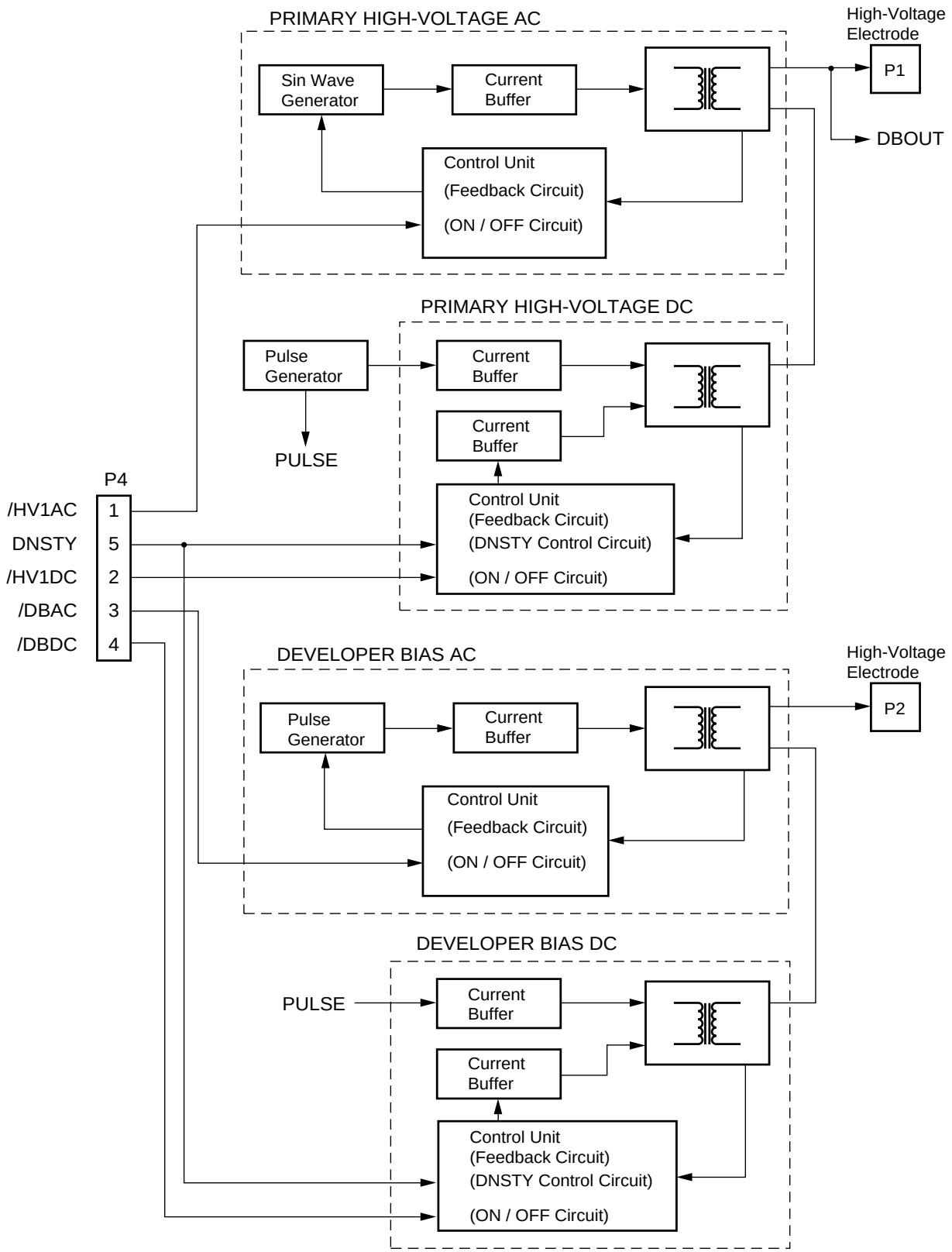

Figure 3.10 High-Voltage Power Supply Block Diagram 1

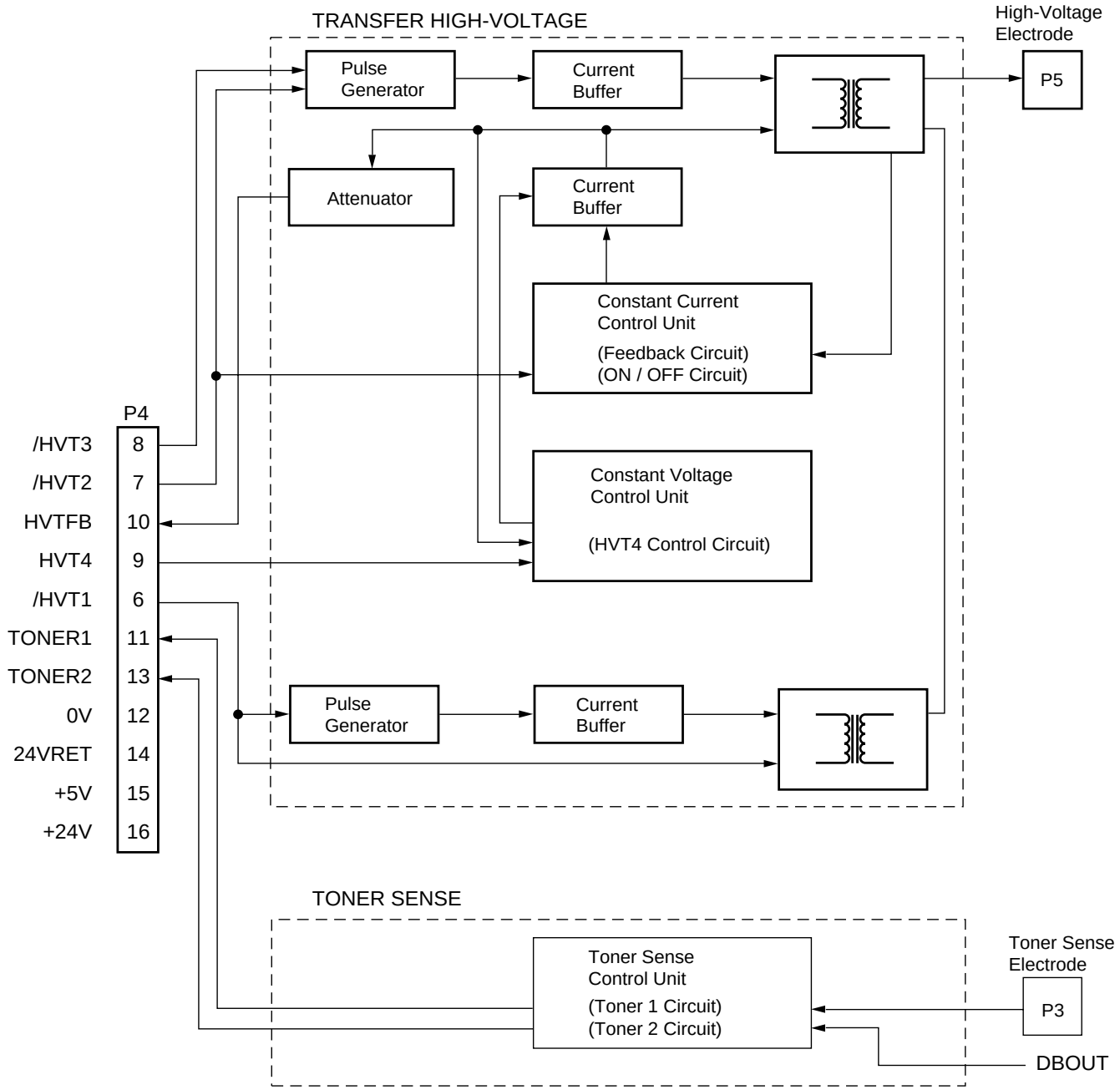

Figure 3.11 High-Voltage Power Supply Block Diagram 2

CHAPTER IV MECHANICAL SYSTEM

■ Safety Precautions

To prevent the creation of secondary problems by mishandling, observe the following precautions during maintenance work.

(1) Always turn off the power before replacing parts or units. When having access to the power supply, be sure to unplug the power cord form the power outlet.

(2) Be careful not to lose screws, washers, or other parts removed for parts replacement.

(3) Be sure to apply grease to the teeth of gears.

(4) When using soldering irons and other heat-generating tools, take care not to damage the resin parts such as wires, PCBs, and covers.

(5) Before handling the PCBs, touch a metal portion of the equipment to discharge static electricity, or the electronic parts may be damaged due to the electricity charged in your body.

(6) When transporting PCBs, be sure to wrap them in conductive sheets such as aluminum foil.

(7) Be sure to reinsert self-tapping screws correctly, if removed.

(8) Unless otherwise specified, tighten screws to the torque values listed below.

- Tapping screws

S tight	M3	:	7kgf・cm
B tight	M3 x 6	:	5kgf・cm
	M3 x 8	:	7kgf・cm

- Stepped screws

M3	:	7kgf・cm
M4	:	10kgf・cm

(9) When connecting or disconnecting cable connectors, hold the connector bodies not the cables. If the connector has a lock, always slide the connector lock to unlock it.

(10) After repairs, check not only the repaired portion but also that the connectors and other related portions function properly before operation checks.

■ Notes

- On the next page is a disassembly order flow which helps you access the object component.
- Unless otherwise specified, the disassembled parts or components should be reassembled in the reverse order of removal.

■ PRINNTER DISASSEMBLING PROCEDURE

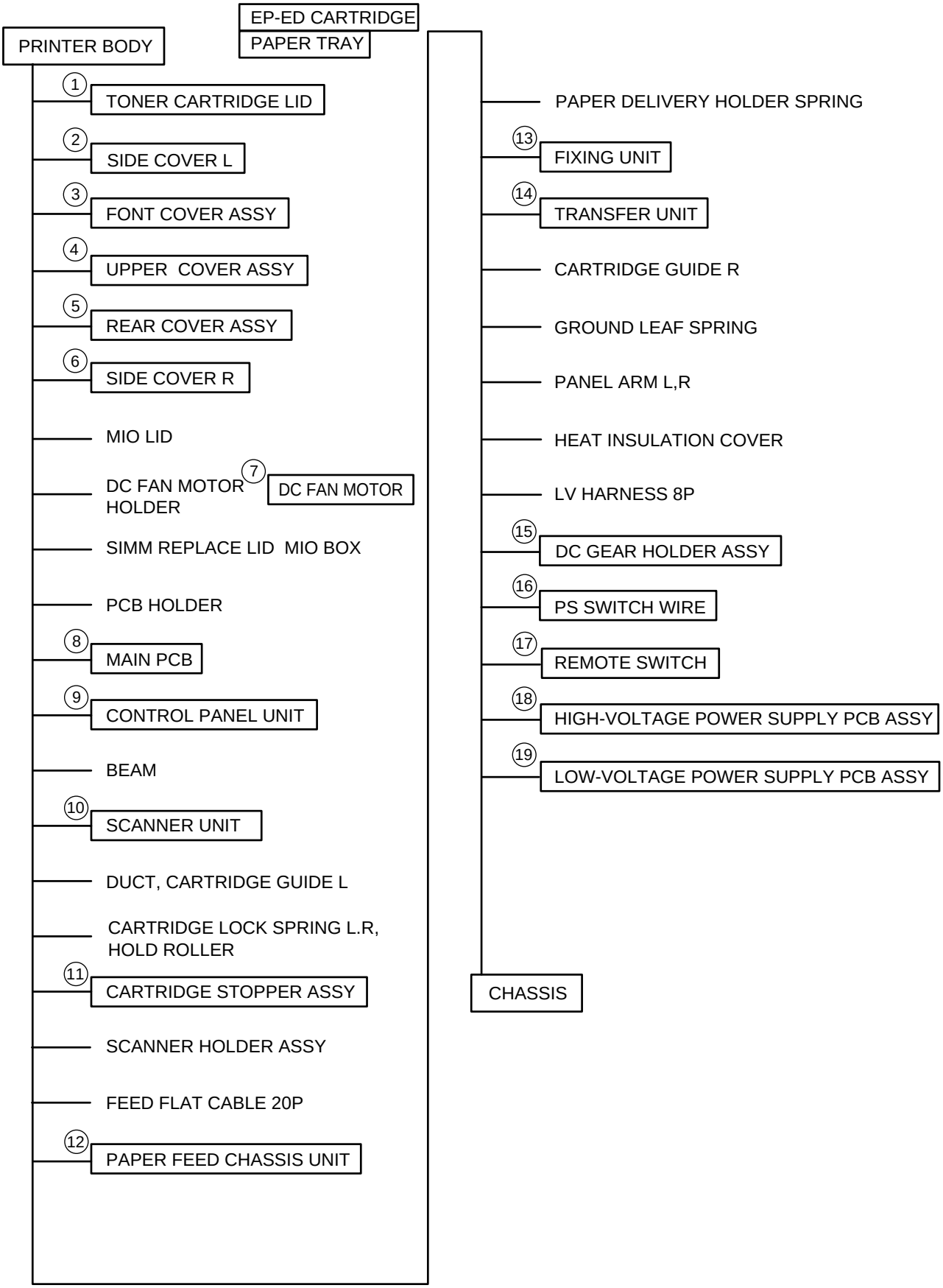

PRINTER BODY

1.1 Configuration

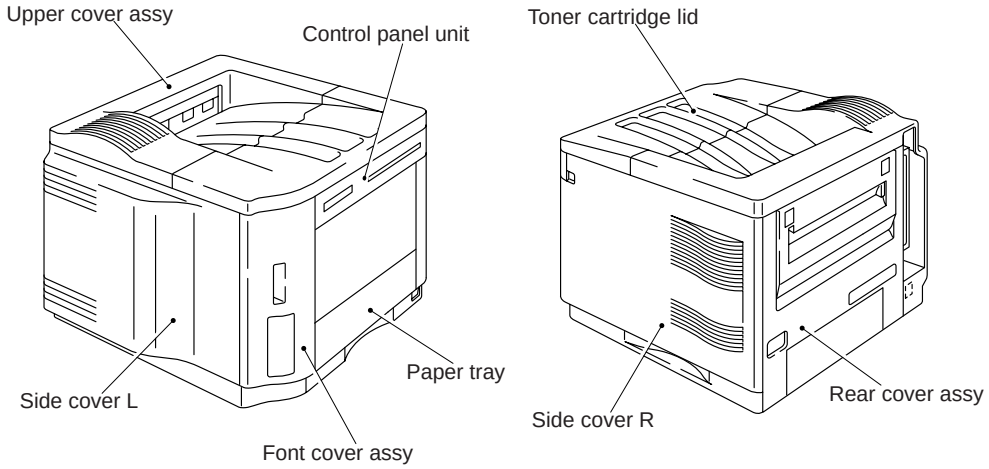

Figure 4.1

1.2 Toner Cartridge Lid

(1) Remove the supporter from the toner cartridge lid.

(2) Remove the toner cartridge lid from the upper cover.

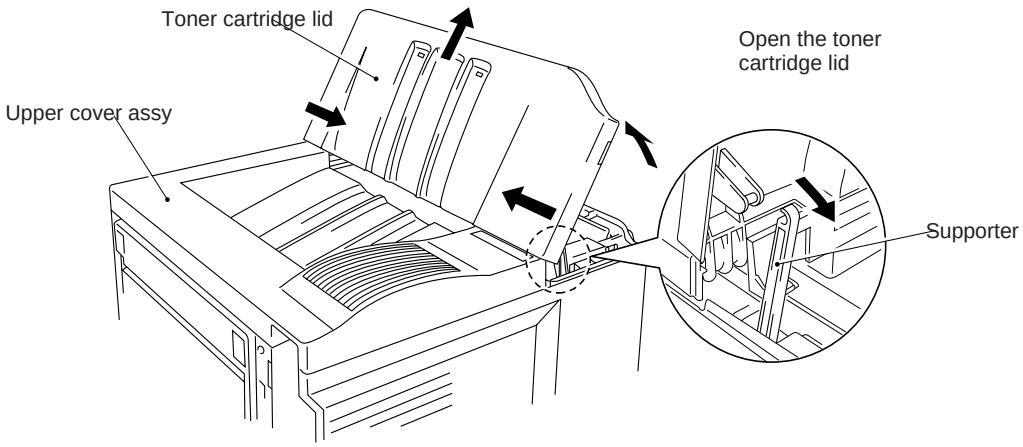

Figure 4.2

1.3 Side Cover L

(1) Release the lock by pinching the lever on the left top surface (Ⓐ) and remove the cover by pulling it rearward (Ⓑ).

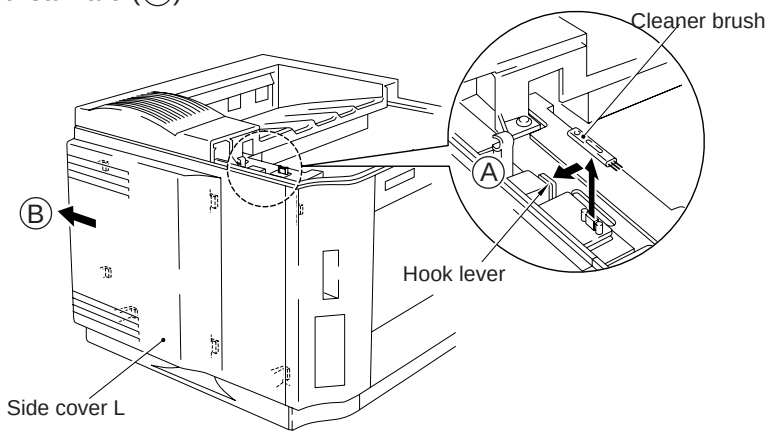

Figure 4.3

1.4 Font Cover Assy

(1) Remove the font cover assy by loosening the screw on the top and releasing the hooks on the bottom and the side.

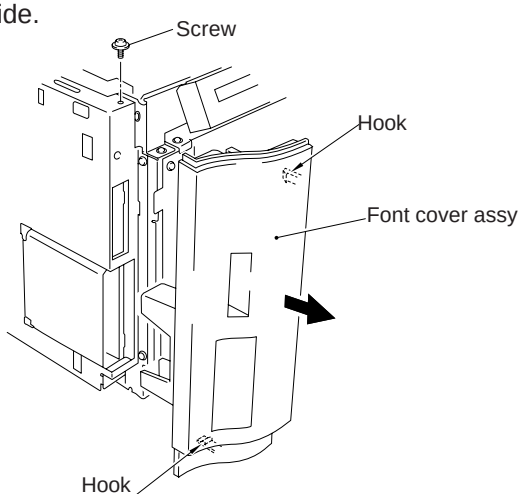

Figure 4.4

1.5 Upper Cover Assy, Rear Cover Assy

1.5.1 Upper cover assy, rear cover assy

(1) Loosen the 4 screws on the rear (the upper 2 screws secure also the upper cover).

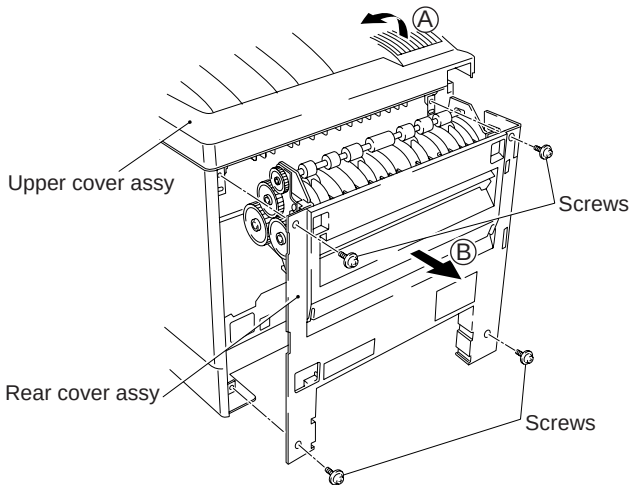

Figure 4.5

(2) Loosen the top left screw.

(3) Remove the upper cover assy (Ⓐ) (Refer to Figure 4.5).

(4) Remove the rear cover by pulling it rearward (Ⓑ) (Refer to Figure 4.5).

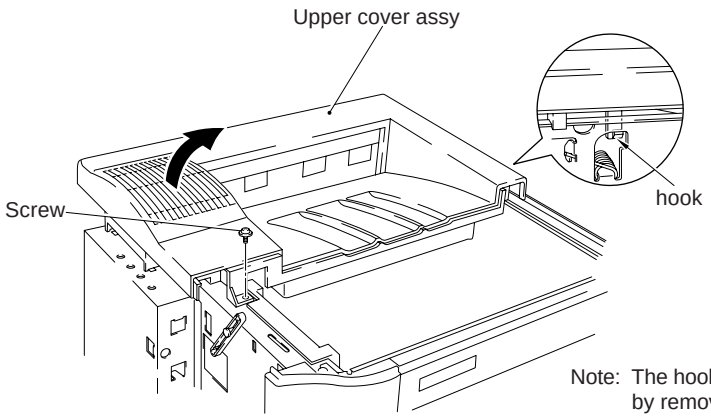

Note: The hook is released automatically by removing the upper cover assy in the direction of the arrow.

Figure 4.6

1.5.2 Changeover guide, jam remove cover

(1) Open the jam remove cover by hooking your finger on 2 dents (Ⓐ).

(2) Remove the jam remove cover with its center part opened by bending the arm of the boss both on sides (Ⓑ) toward the front (Ⓒ).

(3) Remove the changeover guide from the boss by bending the right hook (viewed from the rear) of the rear cover (Ⓓ), then remove the changeover guide (Ⓔ).

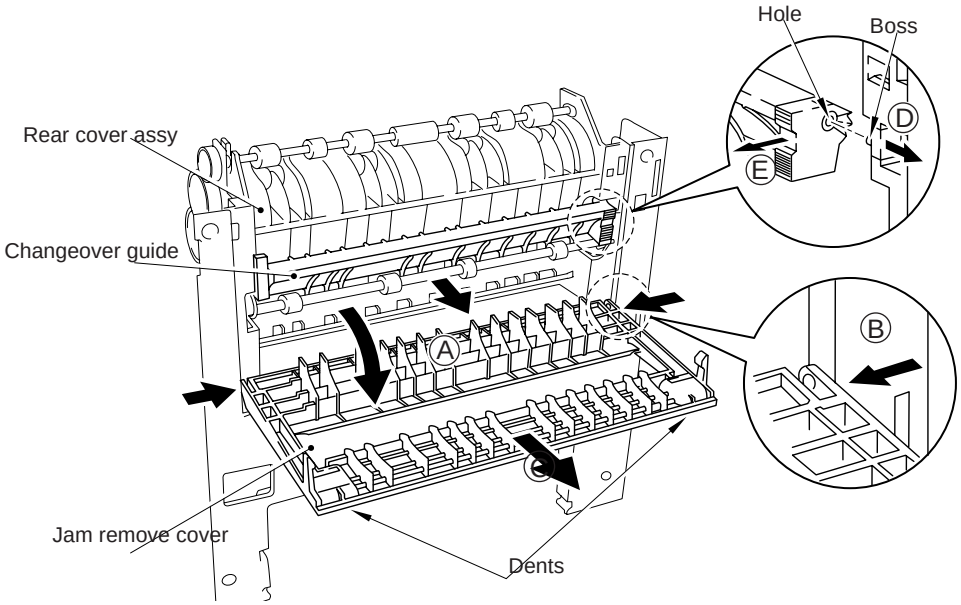

Figure 4.7

1.6 Side Cover R

(1) Remove the side cover R by releasing the 4 hooks.

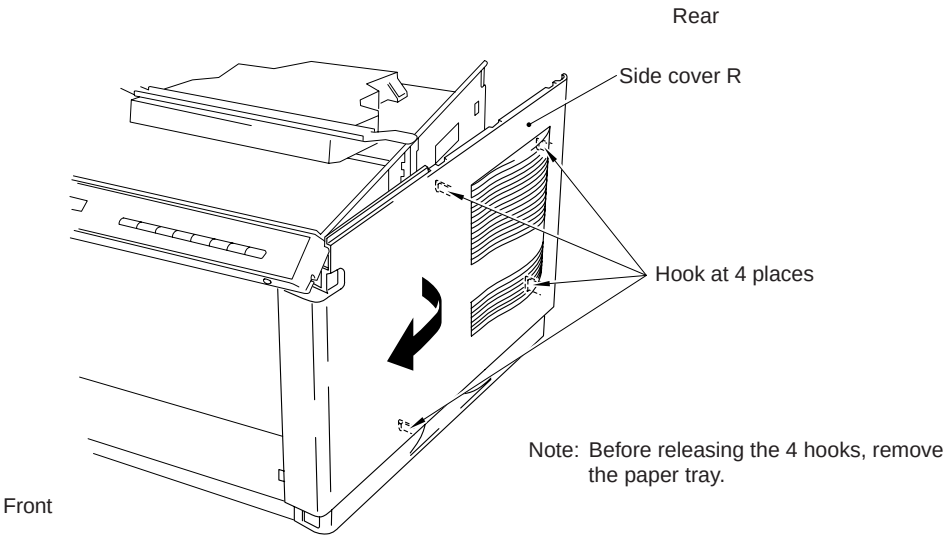

Figure 4.8

1.7 DC Fan Motor

(1) Remove the DC fan motor from the DC fan motor holder by loosening the two screws.

(2) Loosen the screws securing the PCB holder and remove the entire DC fan motor holder.

(3) Remove the fan harness connector from the main PCB assy.

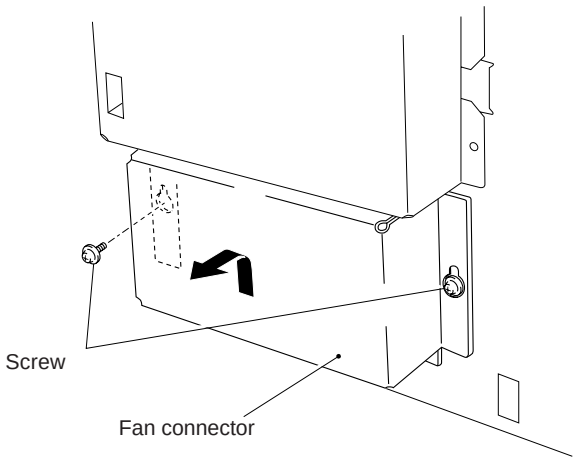

Figure 4.9

1.8 Main PCB

Note: If replacing the main PCB with a new one, follow the step in the attached insertion sheet with the new main PCB to install it.

(1) Remove the SIMM replace lid.

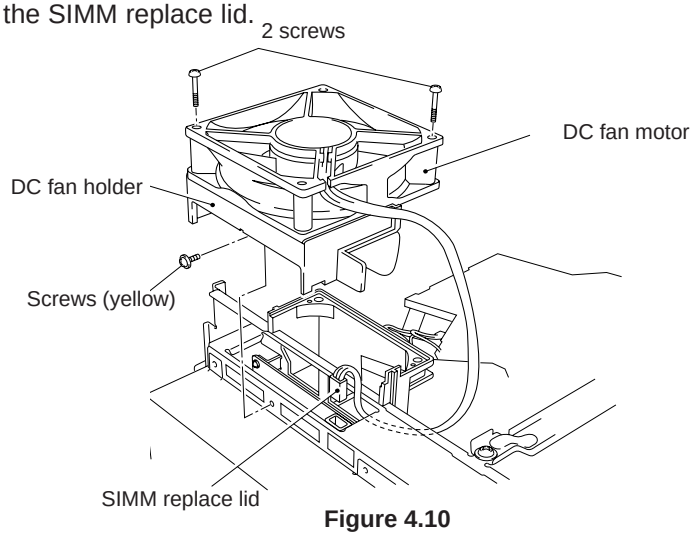

Figure 4.10

(2) Remove the MIO box.

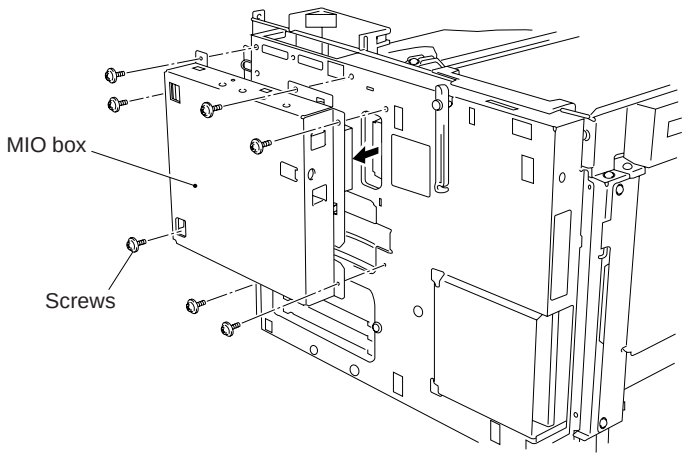

Figure 4.11

(3) Remove the PCB holder by loosening PCB holder fixing screws, 2 centronics connector screws and 2 RS-232C connector screws.

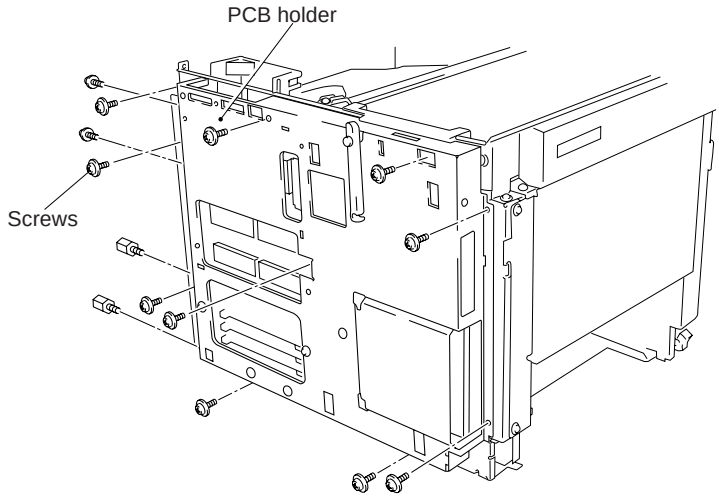

Figure 4.12

(4) Remove the switch flat cable 21P and the feed flat cable 20P.

(5) Remove the fan harness 3P, the fuser harness 4P, the SCN harness 4P, the SCN flat cable 6P, the DC motor harness 4P, the HV harness 16P and the LV harness 8P.

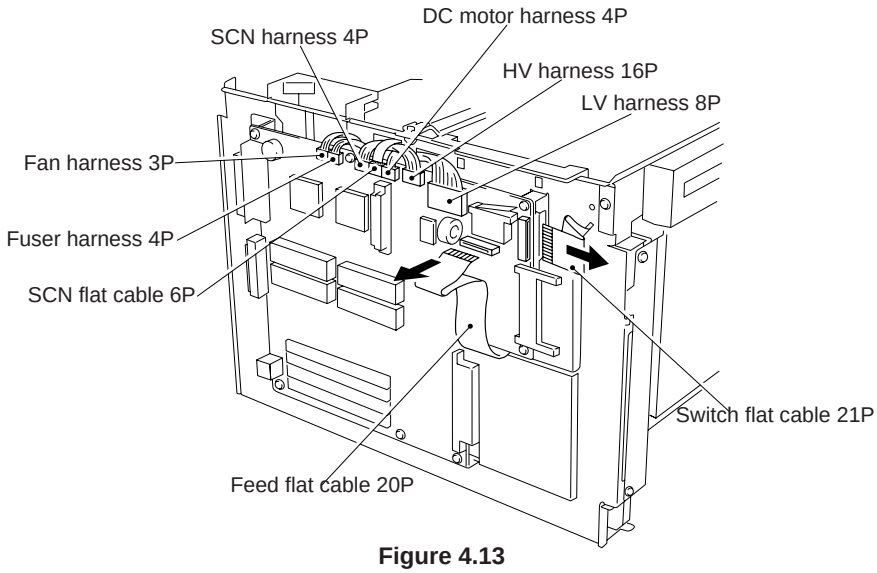

Figure 4.13

(6) Remove the main PCB assy.

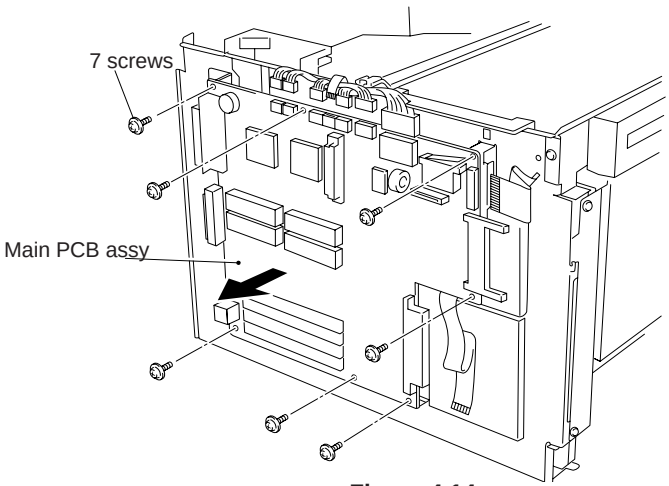

Figure 4.14

1.9 Control Panel Unit

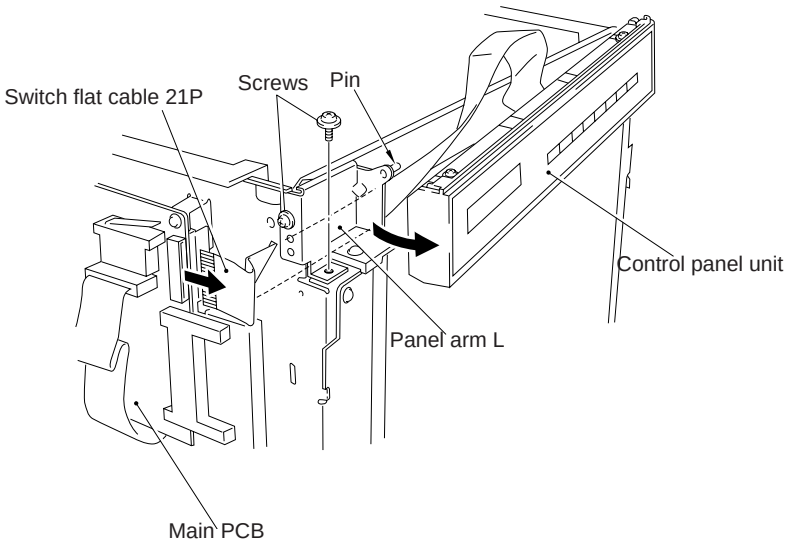

Figure 4.15

(1) Remove the left side the control panel from the arm L by loosening the screws of the panel arm L.

(2) Remove the switch flat cable 21P from the main PCB.

(3) Remove the control panel from the right panel arm R pin by sliding the control panel to the right.

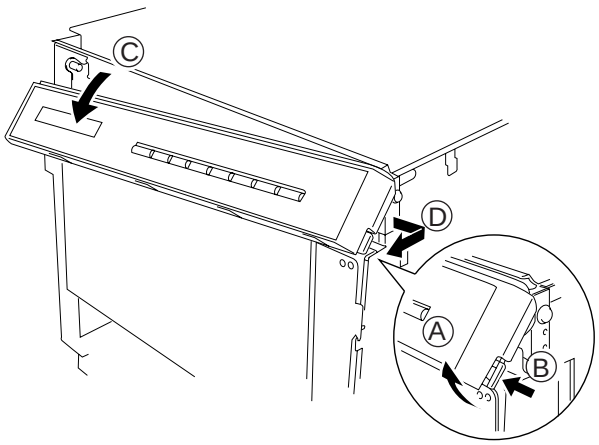

Ⓐ Tilt the control panel unit.
Ⓑ Pinch the lever.
Ⓒ While pinching the lever, rotate, downward toward you, the control panel unit on the right pin taken as a fulcrum.
Ⓓ Remove the control panel unit.

Figure 4.16

(4) Release the panel sheet 8 hooks to remove the panel sheet from the control panel.

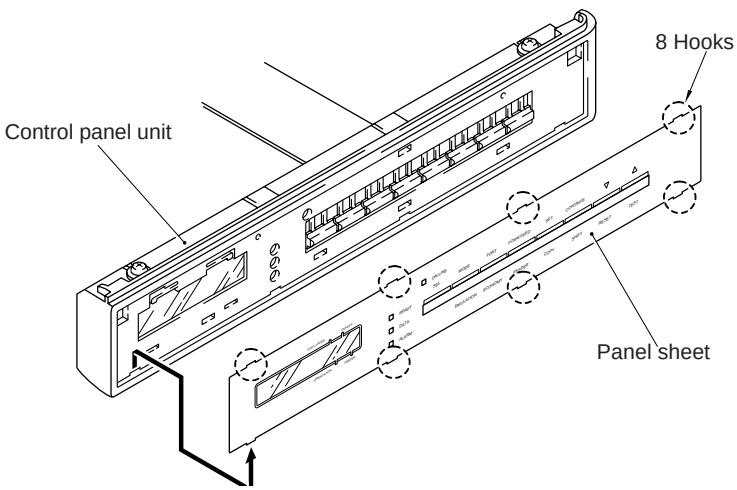

Figure 4.17

1.10 Scanner Unit

(1) Unplug the LD PCB harness (scanner flat cable) connector (6P), and SCN harness connector (4P).

(2) Remove the beam from the body by loosening the screws.

(3) Remove the scanner unit from the body by loosening the screws.

Caution: Do not disassemble the scanner unit, it can be only adjusted at the factory.

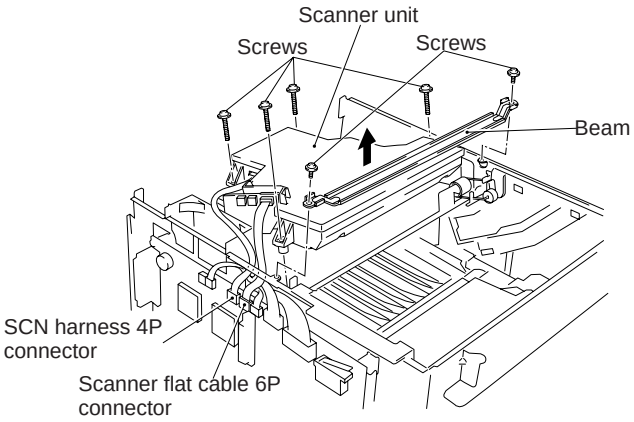

Figure 4.18

1.11 Cartridge Stopper Assy

(1) Loosen 4 screws and remove the scanner mount plate in the direction of the arrow (the ground leaf spring is also released at the same time.)

(2) Release the hook by bending the arm of the cartridge stopper assy (Ⓐ), slide the cartridge stopper assy to the left (Ⓑ) and the remove the cartridge stopper assy (Ⓒ).

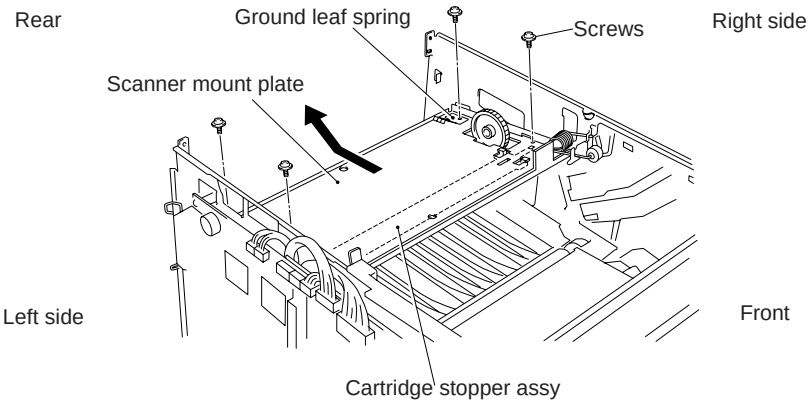

Figure 4.19

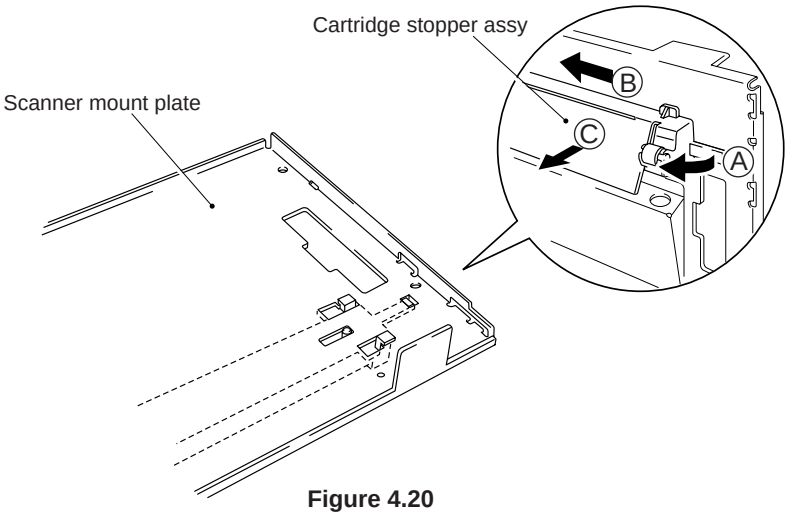

Figure 4.20

1.12 Paper Feed Chassis Unit

(1) Pull out the unit by loosening the 8 screws (4 screws for front and 4 screws for bottom).

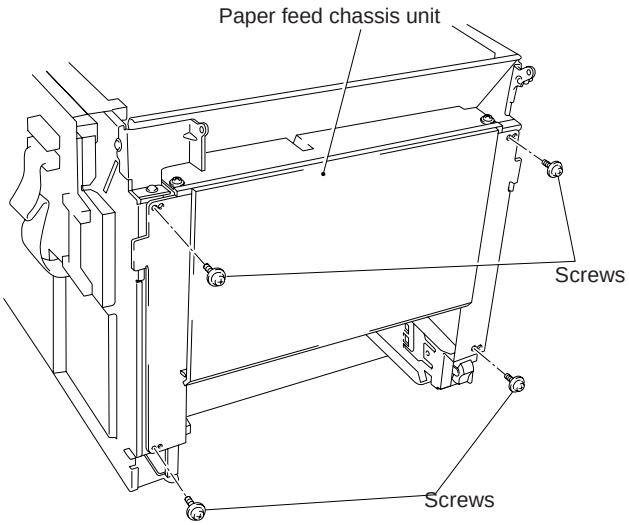

Note: When installing the paper feed chassis unit, screw the left chassis of this paper feed chassis unit, set the paper tray, displace the right chassis of this unit up to the paper tray and screw them.

(2) Remove the paper hold front and paper hold rear by pinching the pawl of the paper hold front with pliers.

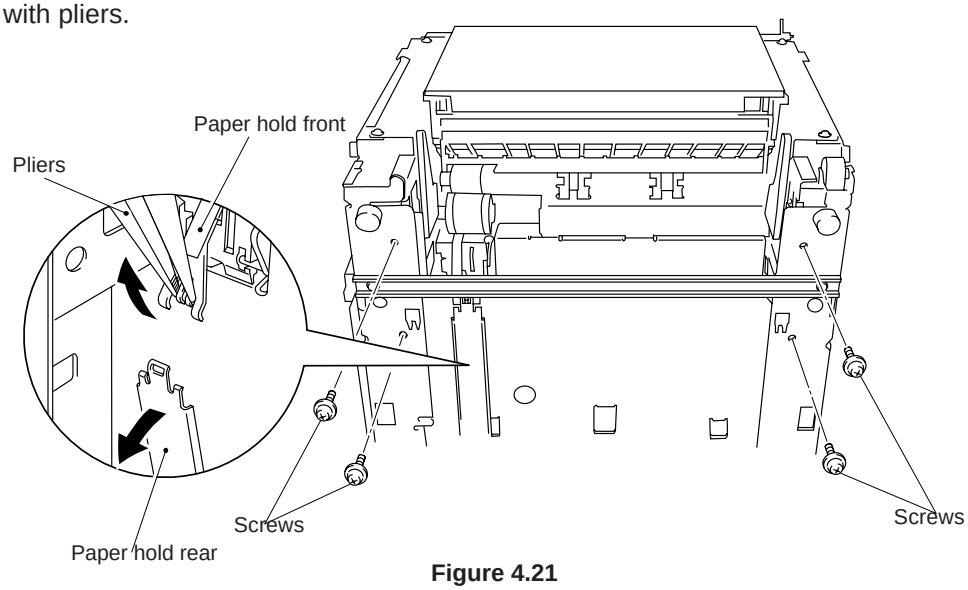

Figure 4.21

(3) Release the left cartridge hold roller and remove the cartridge guide L (by loosening the screw and releasing the hook) then pull out feed flat cable 20P.

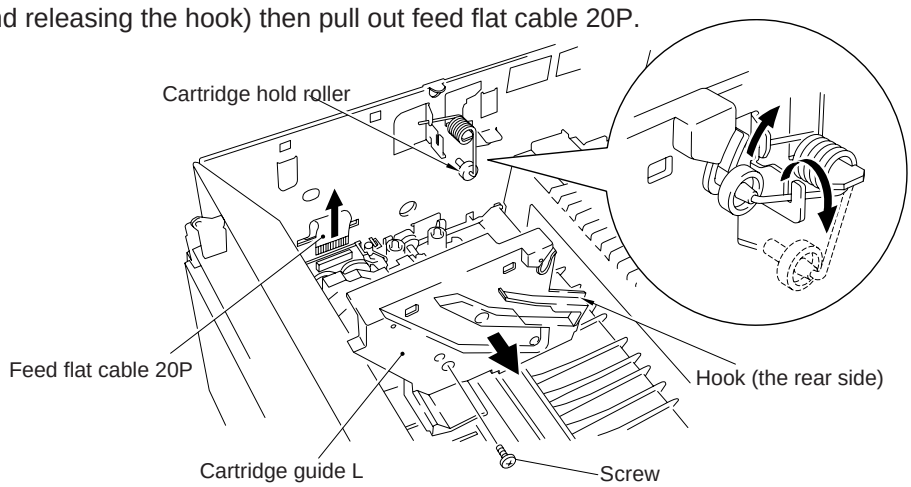

Figure 4.22

(4) Remove the paper feed chassis unit.

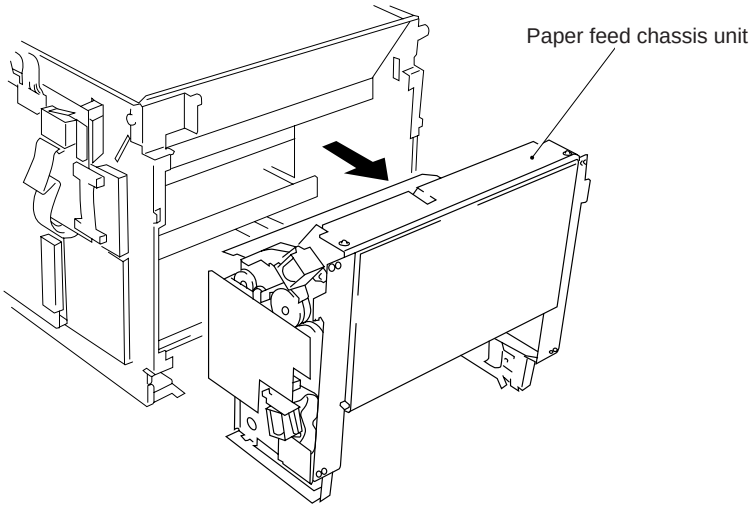

Figure 4.23

1.13 Separation Pad Assy

(1) Remove the paper pick-up roller assy and roller collar. (Refer to subsection 1.22)

(2) Remove the separation pad assy by pulling it out from the paper feed guide upper.

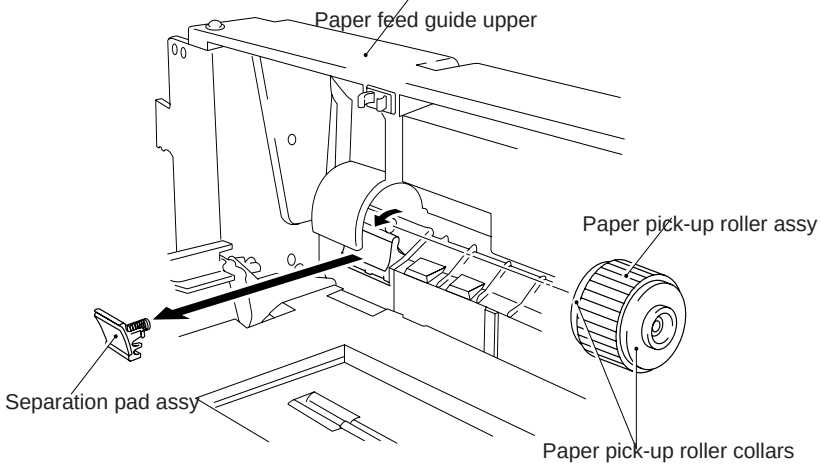

Figure 4.24

(3) Remove the spring from the separation pad assy.

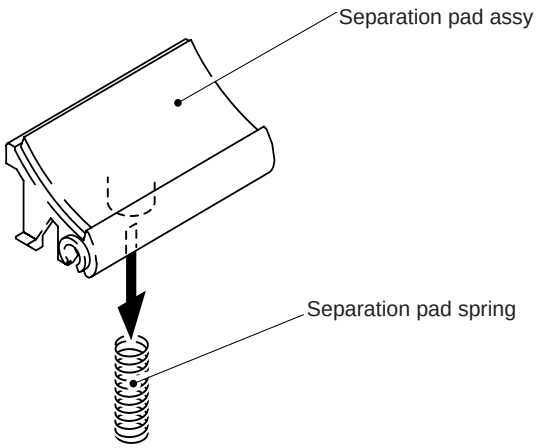

Figure 4.25

1.14 MP PE Sub Actuator

(1) Pull out the actuator upward from the MP tray assy (pay attention to the hook because it is fragile).

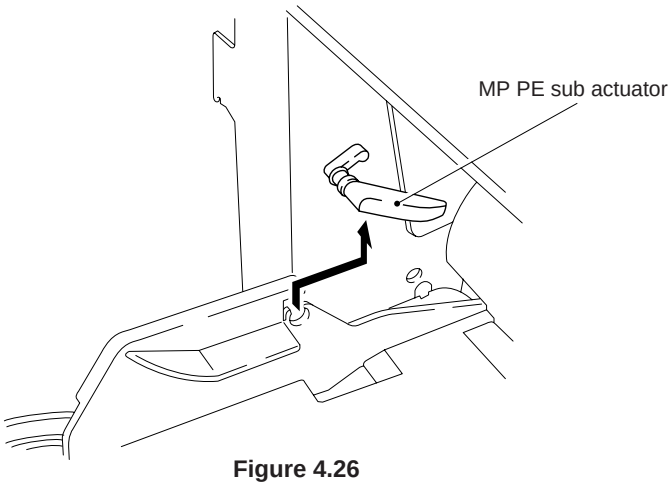

Figure 4.26

1.15 P Feed /Size-SW PCB Assy

(1) Put the 3 chassis L tabs to their original position.

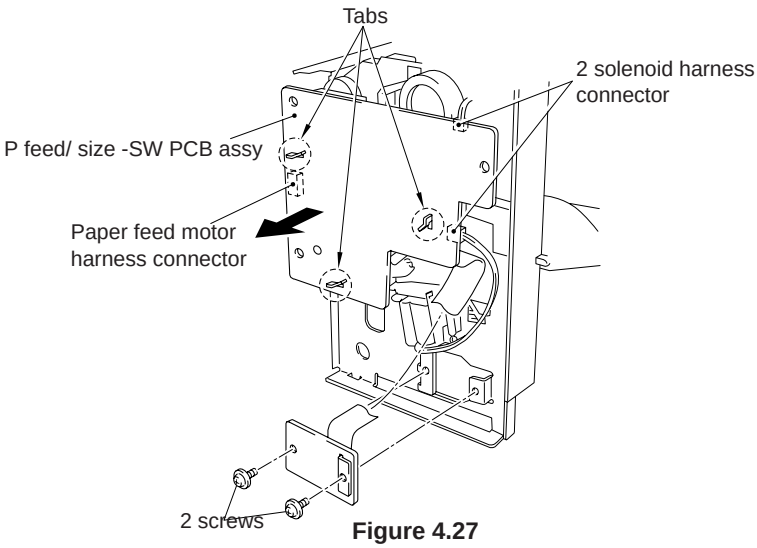

Figure 4.27

(2) Unplug the 2 solenoid connector and the paper feed motor harness connector.

(3) Loosen the 2 screws of the size-sw PCB.

1.16 Side-Switch Spring

(1) Pull out the size-switch spring.

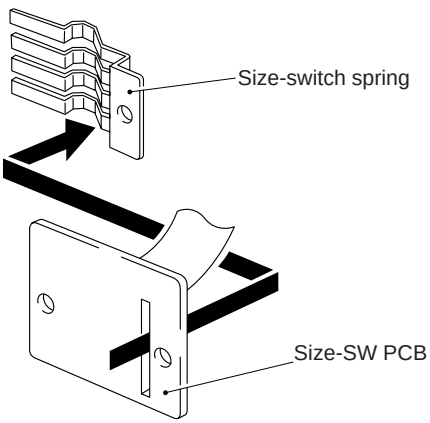

Figure 4.28

1.17 Regist sensor actuator

(1) Remove the actuator by shifting it to the left from the chassis hole.

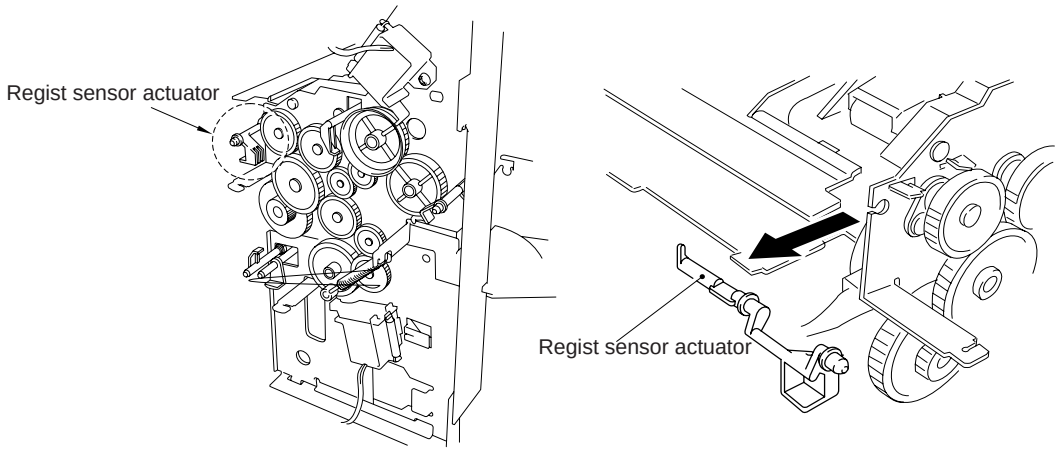

Figure 4.29

1.18 MP Paper Detection Actuator

(1) Remove the actuator by removing the 2 bearings from the roller holder.
This operation should be carried out with the PCB removed.

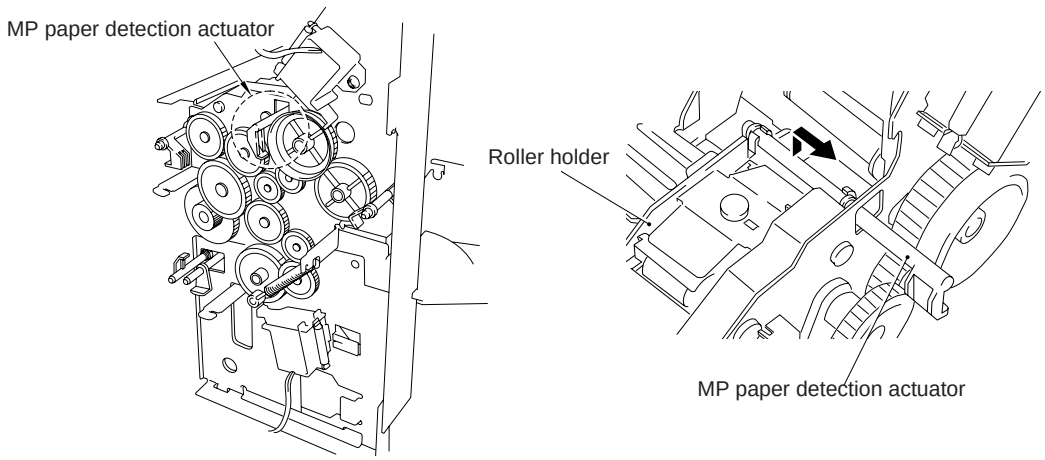

Figure 4.30

1.19 PE Sensor Actuator MP

(1) Pull out the actuator by shifting it to the right from the chassis hole.

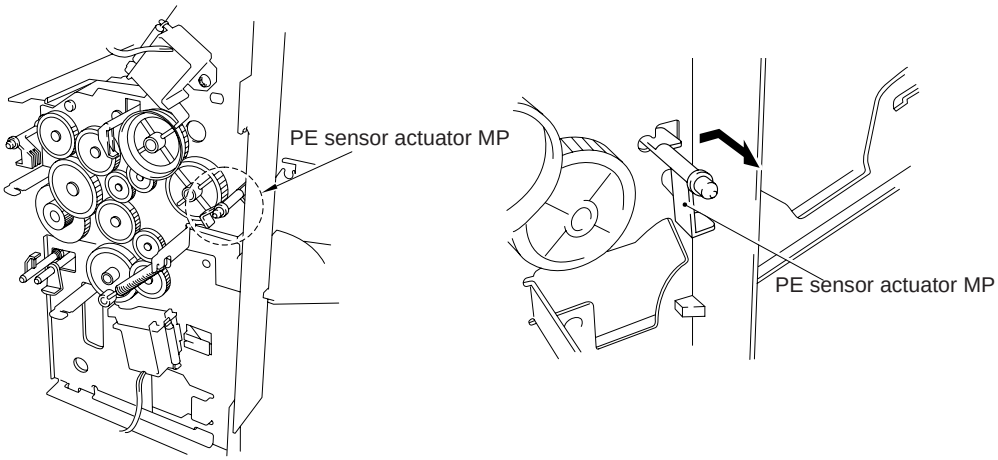

Figure 4.31

1.20 Tray Sensor Holder

(1) Disengage the DU (Duplex) detection actuator from the hook and slide it to the outside.

(2) Loosen the screw and remove the holder by lifting it from the chassis.

PE sensor actuator tray, PE actuator link, DU detection actuator

1) Remove the PE actuator link from the PE sensor actuator tray.
2) Remove the PE actuator link from the tray sensor holder.
3) Remove the PE sensor actuator tray from the tray sensor holder.
4) Remove the DU detection actuator from the tray sensor holder.

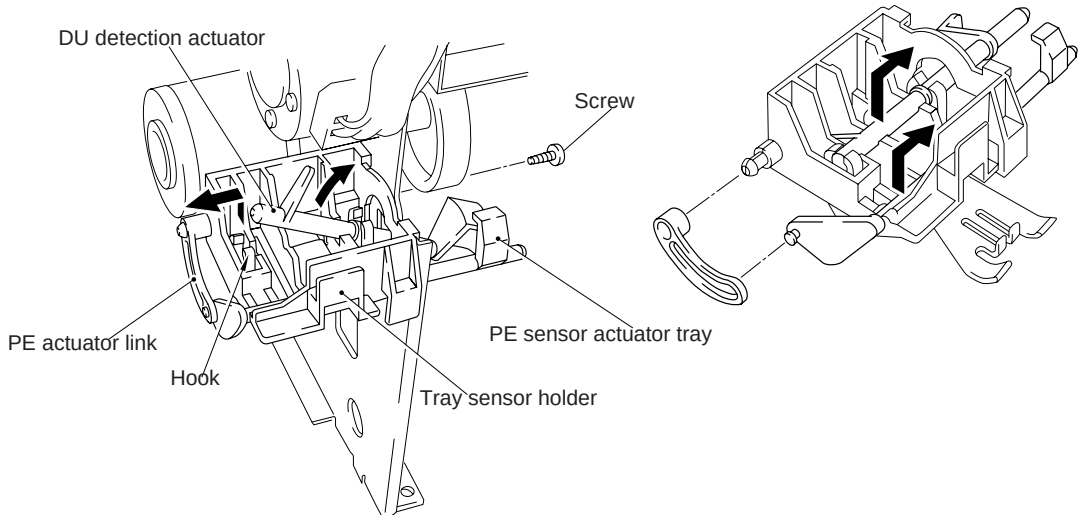

Figure 4.32

1.21 Roller Holder

(1) Remove the gear 28.

(2) Loosen and pull out the 2 screws.

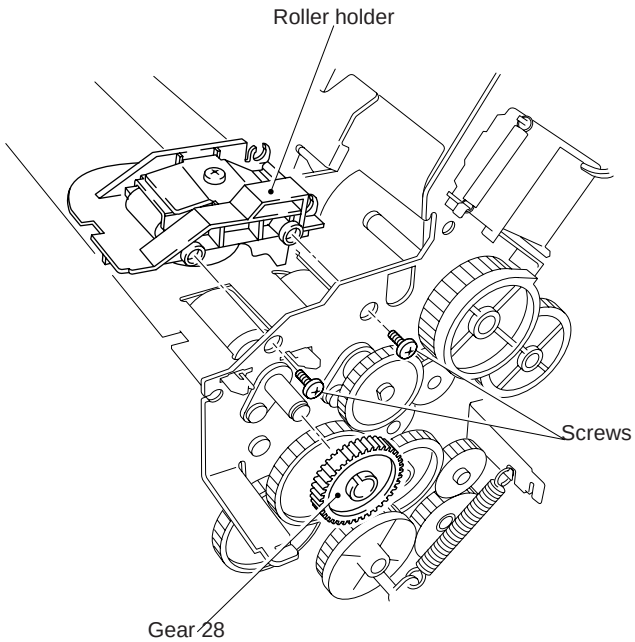

Figure 4.33

1.22 Paper Pick-up Roller Assy, Bearing

(1) Pull out the MP paper pick-up gear 35 and the tray paper pick-up gear 35, from the paper pick-up roller shafts.

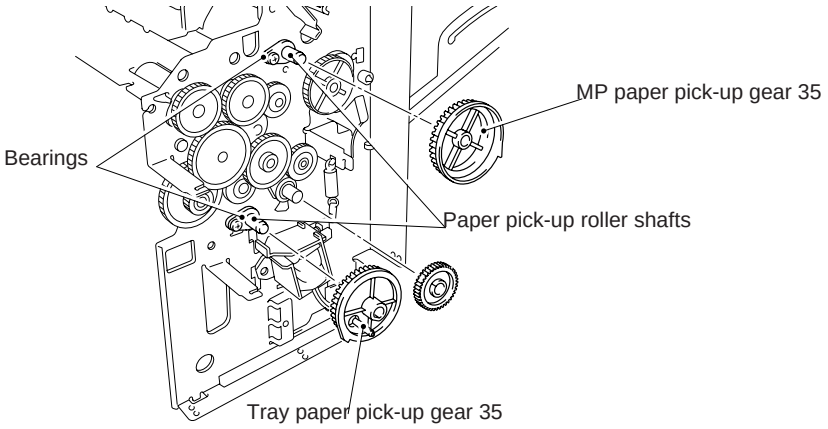

Figure 4.34

(2) Loosen the bearing screws and pull out the paper pick-up rollers.

*When only the paper feed rollers are to be replaced, they can be replaced without removing the paper feed unit (with the body assembled).

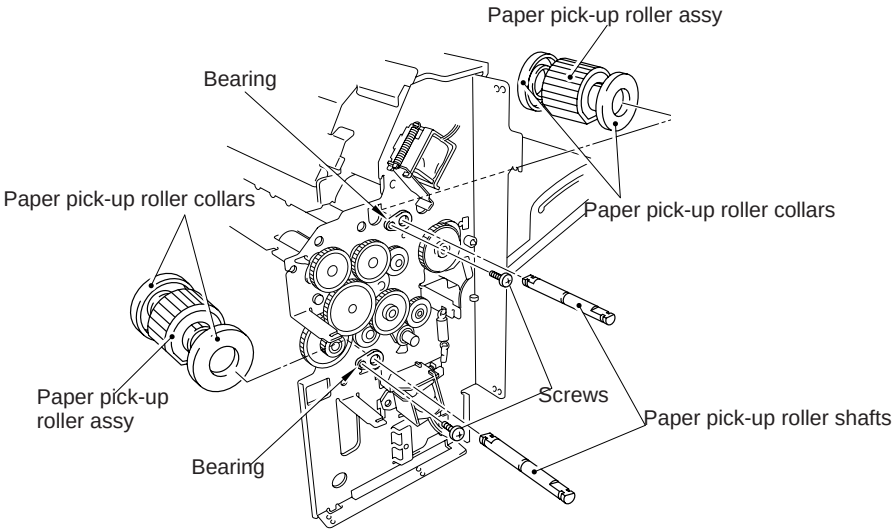

Figure 4.35

(3) Pull out the paper pick-up roller shafts.

(4) Remove the paper pick-up roller collars from the paper pick-up rollers assy.

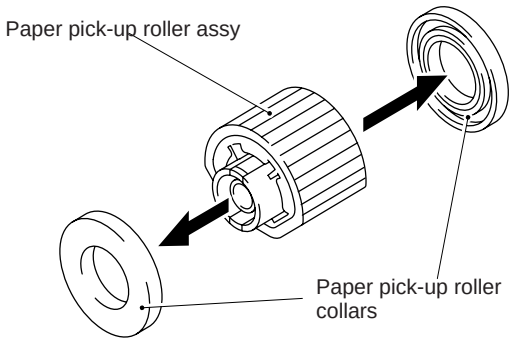

Figure 4.36

1.23 Paper Pick-up Solenoid

(1) Remove each solenoid by loosening their screw.

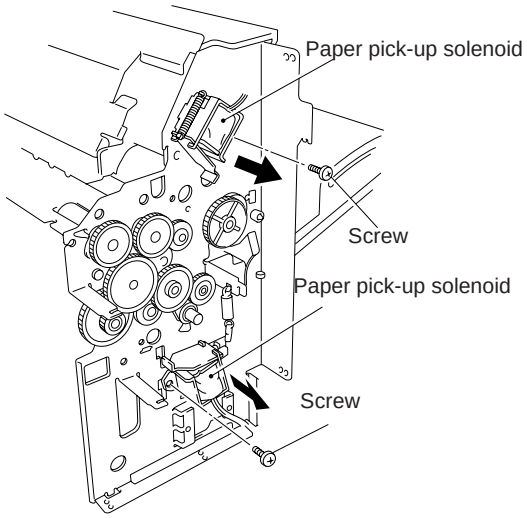

Figure 4.37

1.24 Paper Feed Motor Assy

(1) Pull out the paper feed motor assy by loosening its 2 screws.

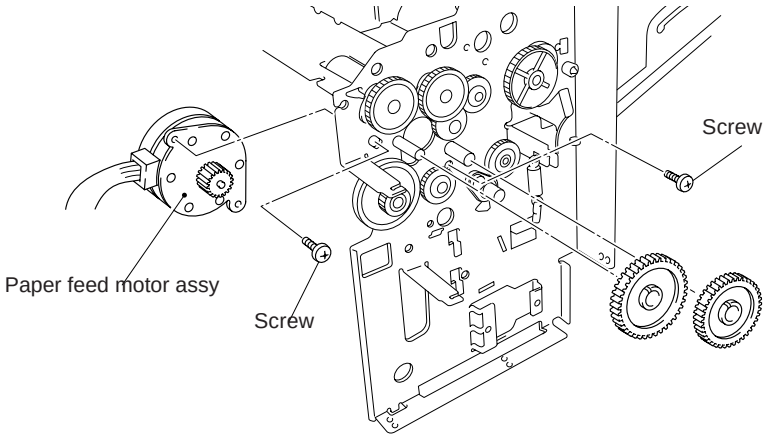

Figure 4.38

(2) For each assy, loosen a screw and pull out the bearing and the 6 washers.

See the picture below.

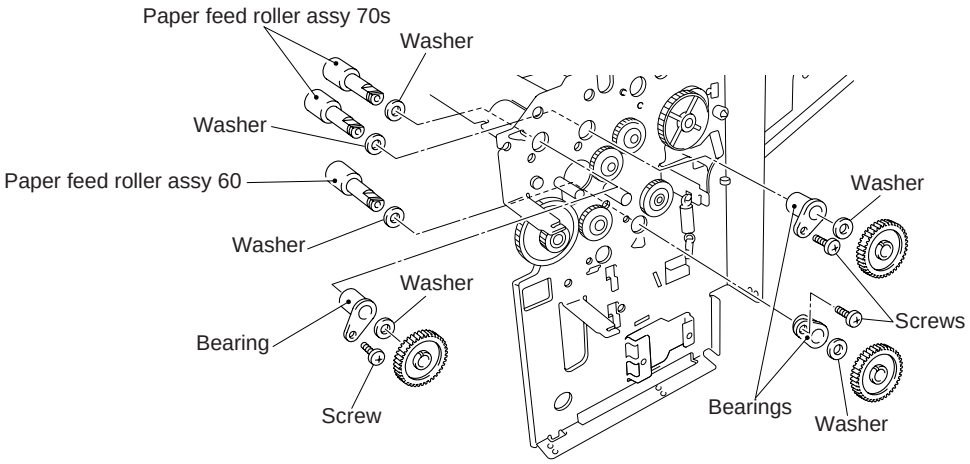

Figure 4.39

1.25 MP Tray Cover

(1) Remove the MP tray cover from the paper feed chassis unit by bending its hook on both sides.

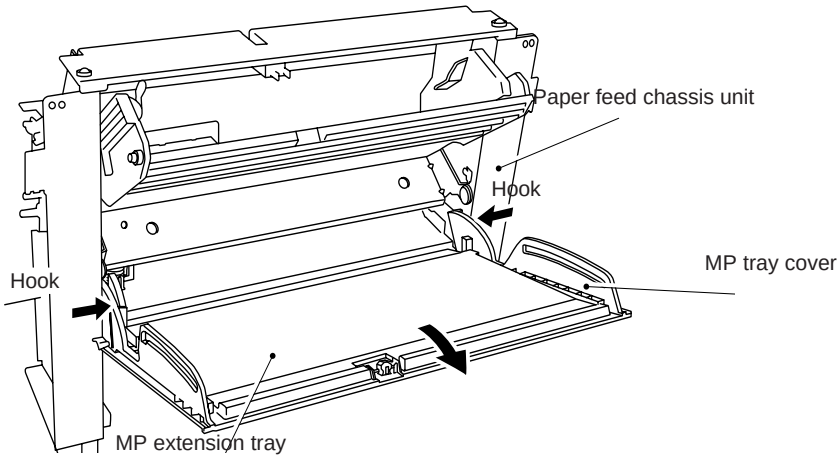

Figure 4.40

(2) Remove the MP extension tray from the MP tray cover by bending the former.

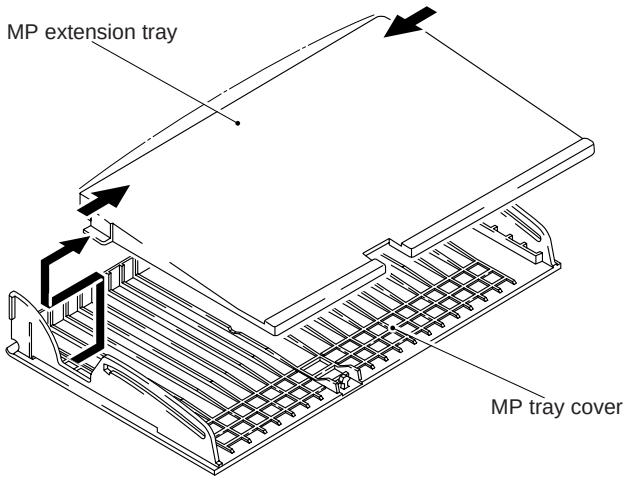

Figure 4.41

1.26 MP Tray Assy

(1) Remove the MP tray assy from the MP tray cover by bending its bosses.

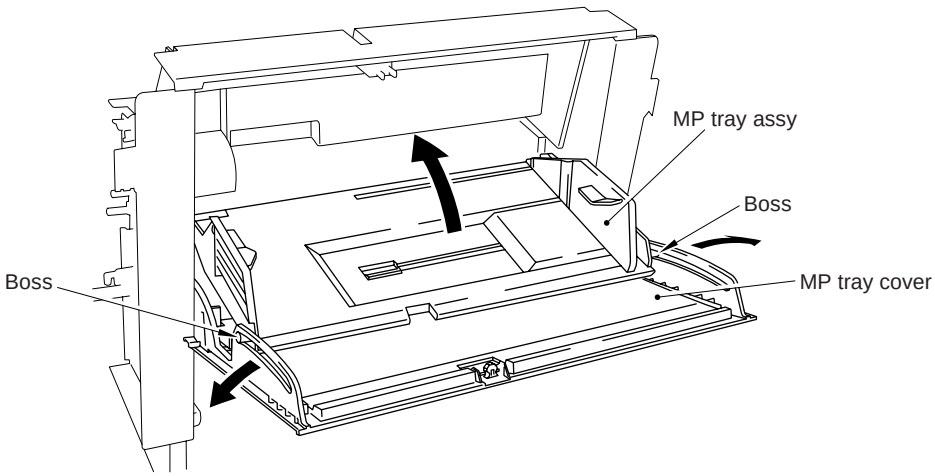

Figure 4.42

(2) Remove the 2 fixing bushes.

(3) Remove the MP tray assy.

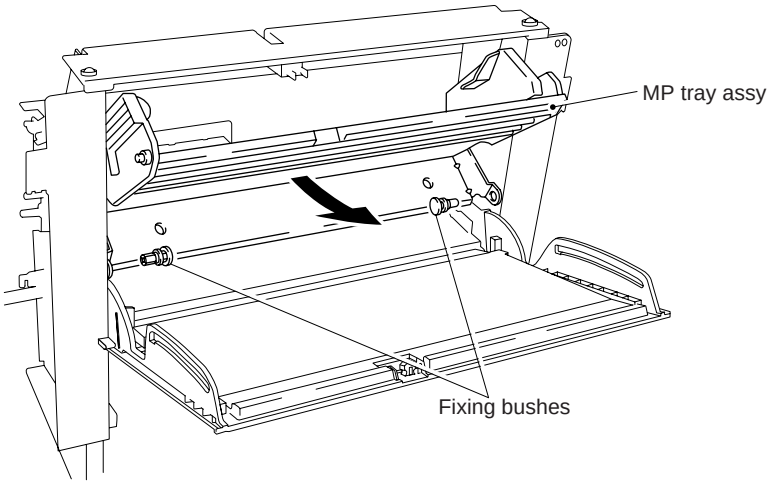

Figure 4.43

(4) Remove the MP tray assy from the MP release plate bending its bosses.
The MP tray can be easily removed if it is slanted.

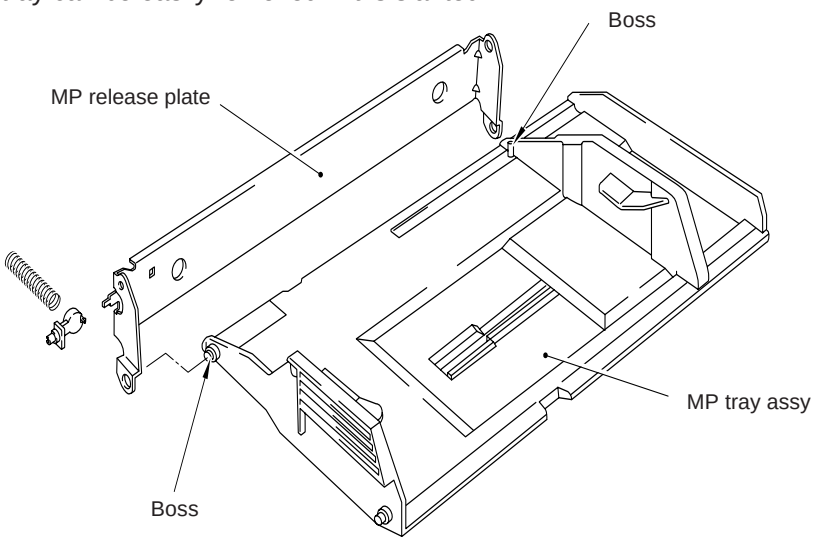

Figure 4.44

1.27 Paper Path Separation Plate, Paper Path Separation Film

(1) Remove them from the paper feed guide lower by bending them.

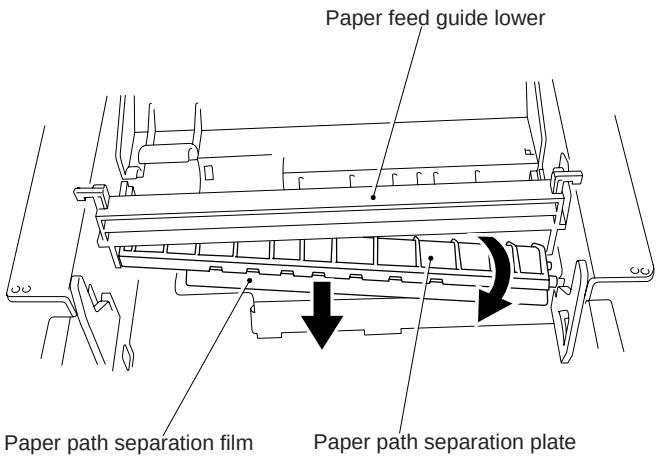

Figure 4.45

1.28 Latch

(1) Remove the latch from the paper feed guide upper by releasing the 2 hooks.

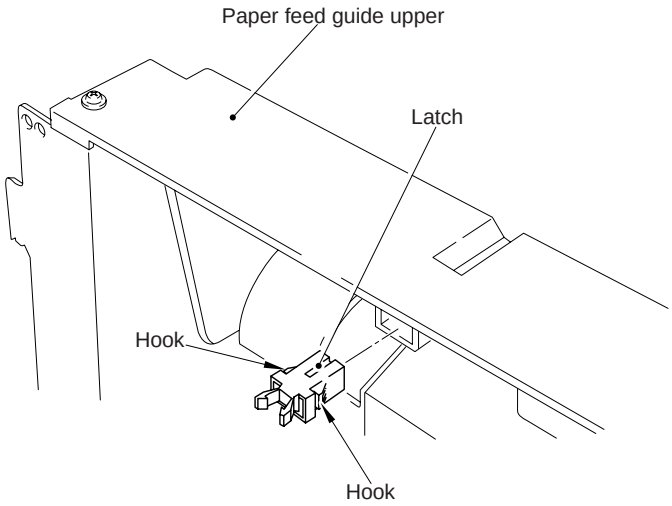

Figure 4.46

1.29 Fixing unit (for both 120V and 230V, the only difference is the halogen heater)

(The fixing unit can be disassembled even after removing the rear cover in section 1.6).

(1) Release the hook of the heater lead wire connector (2P) by pinching the connector and pull it out upward (to remove it from the low-voltage power supply assy).

(2) Pull out the fixing PCB connector (4P) to the rear (Ⓐ).

(3) Loosen the 2 screws which are securing from the rear, and remove the fixing unit by pulling it to the rear.

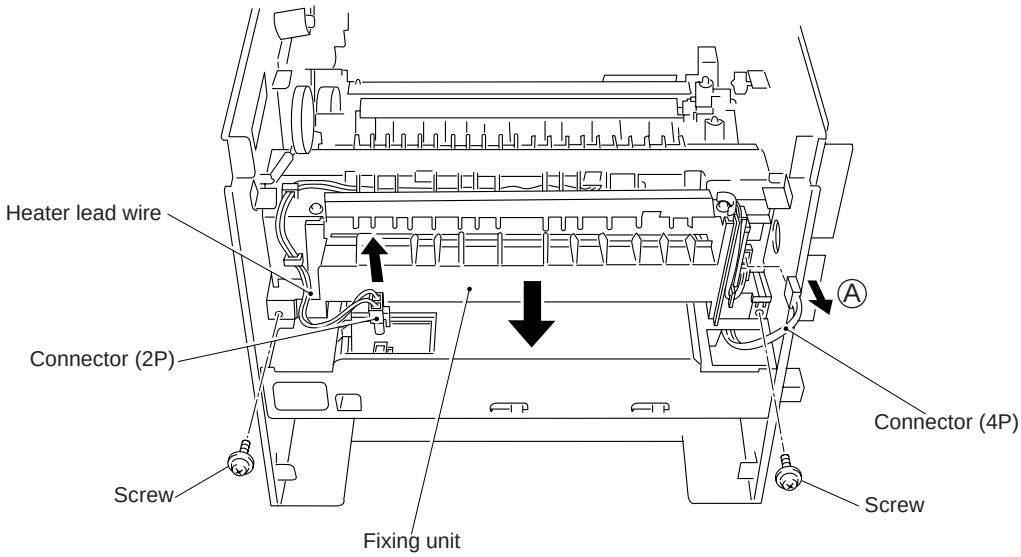

Figure 4.47

(4) Take off the halogen heater from the heater support spring, remove the halogen heater by pushing it and pulling the heater support spring at the same time (Ⓐ).

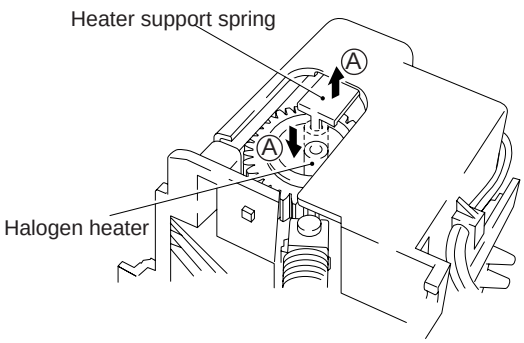

Figure 4.48

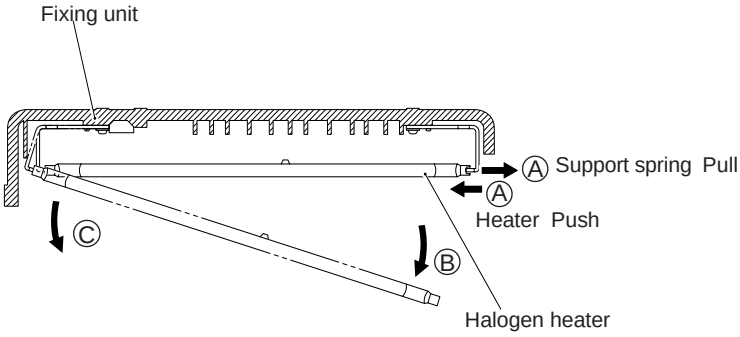

Figure 4.49

(5) Loosen 4 screws and remove the thermistor lead wire connector (2P) of the fixing PCB (see Figure 4.51), and remove the fixing unit cover by detaching the wire from the hooks of the fixing unit chassis.

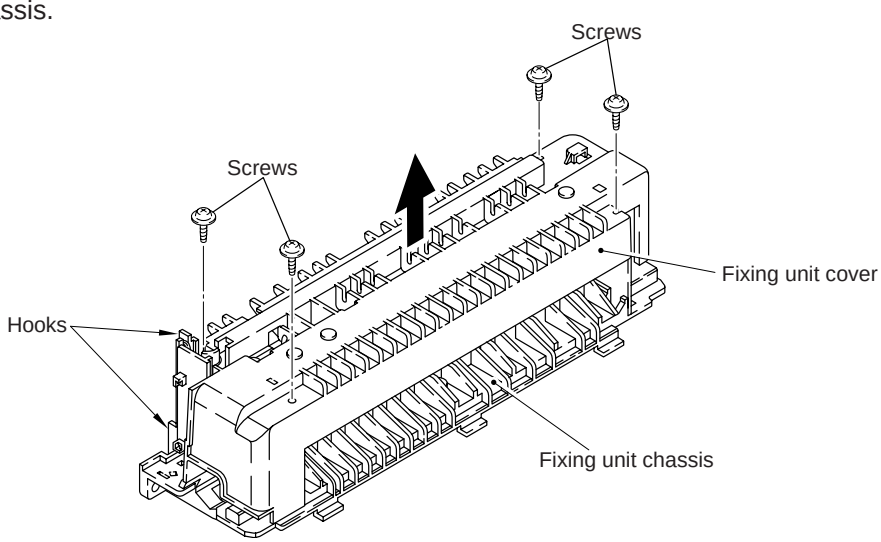

Figure 4.50

(6) Loosen a screw and remove the fixing PCB assy.

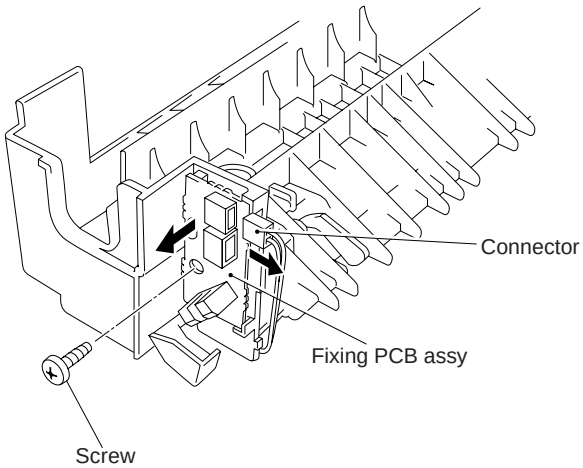

Figure 4.51

(7) Release the left hook and take off the paper delivery actuator.

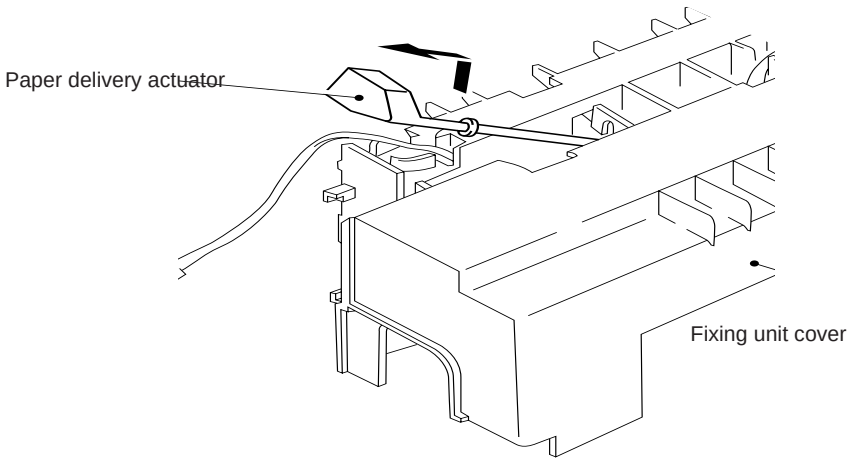

Figure 4.52

(8)

1) Remove the fixing heat insulation cover (by loosening the 2 screws), the pressure roller spring and pressure roller bearing on both sides, and the pressure roller.

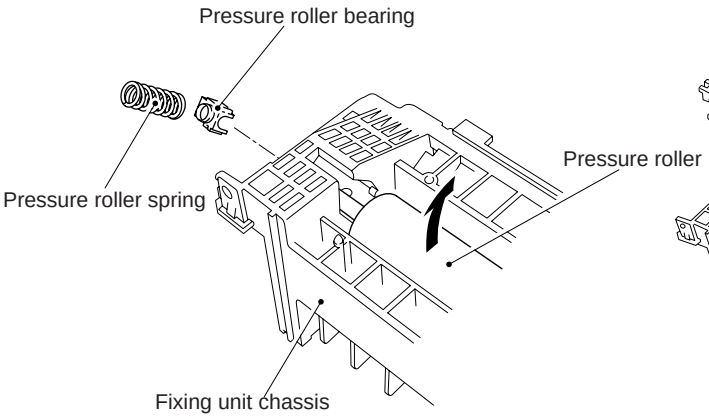

Figure 4.53

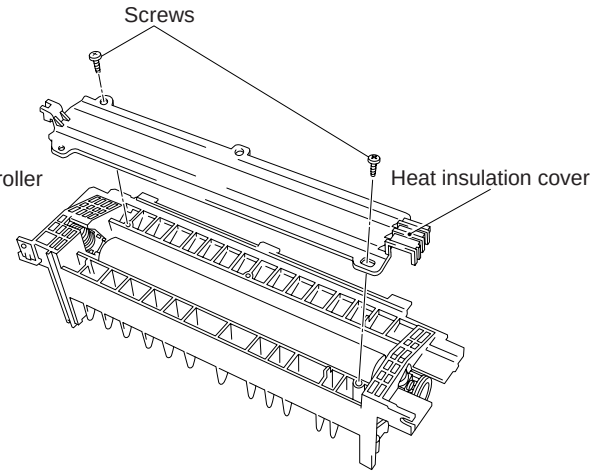

Figure 4.54

2) Remove the retaining rings (on both sides).

3) Remove the HR gear, loosen the screw and remove the spring washer, remove the left and right HR bearings and the heat roller by sliding it.

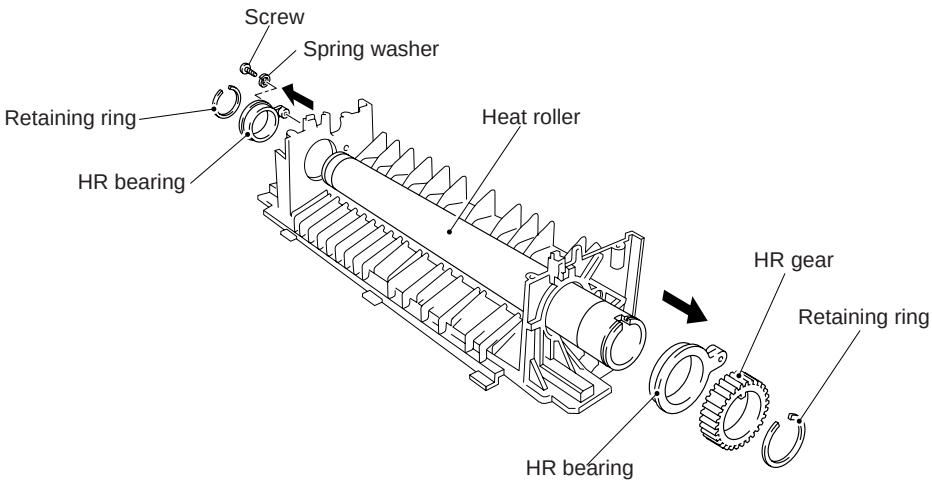

Figure 4.55

1.30 Transfer Unit

(1) Loosen a screw.

(2) Release the 3 right hooks, (see Figure 4.57) lift the right part of the unit (Ⓐ) and slide it to the right (Ⓑ) to take off the left part from the main chassis L. Remove the transfer unit from the body by lifting the former.

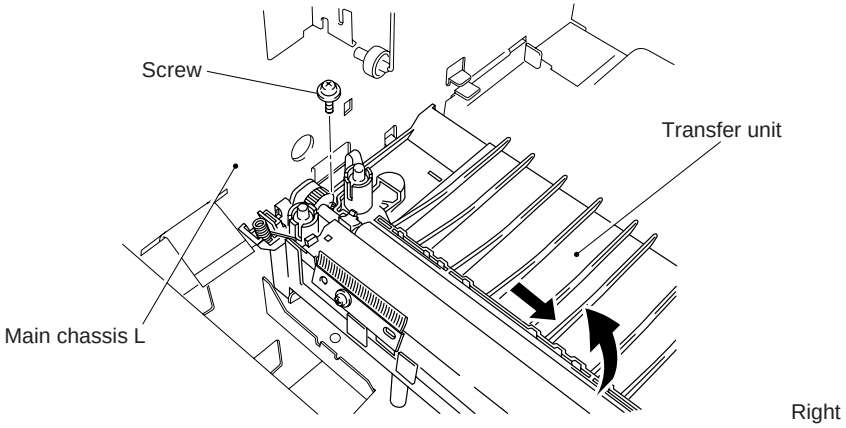

Figure 4.56

(3) Open the transfer base hook and take off the left bearing (white) from the hook (Ⓐ). Lift the left side (Ⓑ), slide it to the left (Ⓒ) and take off the roller shaft from the right bearing (black) (Ⓓ).

(4) Remove the transfer roller assy.

Caution : Do not touch the sponge rubber roller when replacing the transfer roller (the roller with hand grease or clasped too strongly may result in poor printing quality).

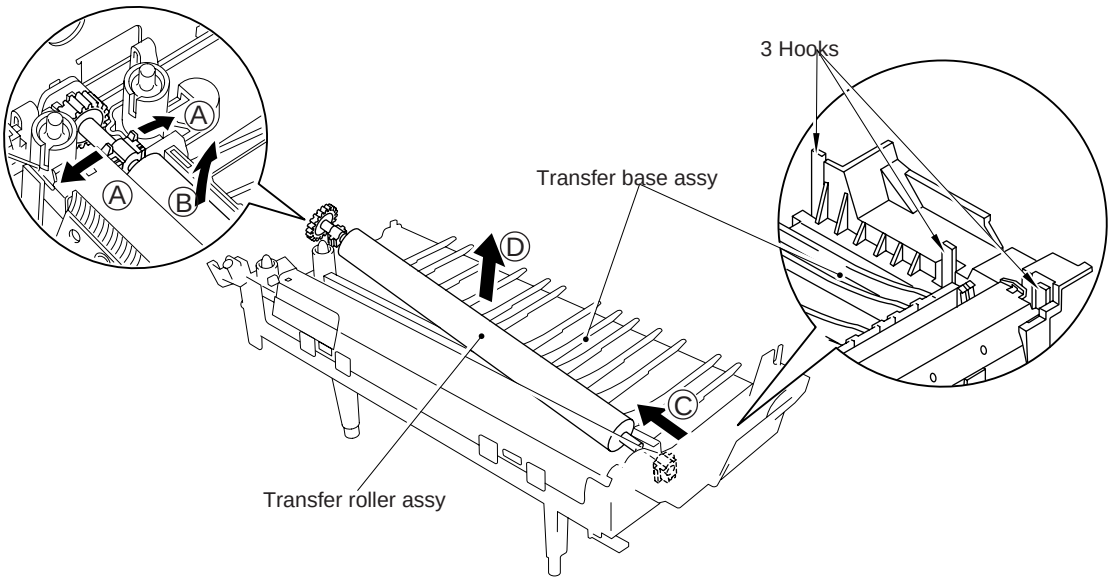

Figure 4.57

1.31 DC Gear Holder Assy

(1) Remove the DC motor connector, then remove the paper delivery holder spring.

(2) Loosen the 4 screws and remove the DC gear unit from the body.

(3) Remove the paper delivery gear assy, the gears, the gear 48 spring, and the washer.

(4) Loosen the 3 screws and remove the DC motor assy from the gear holder.

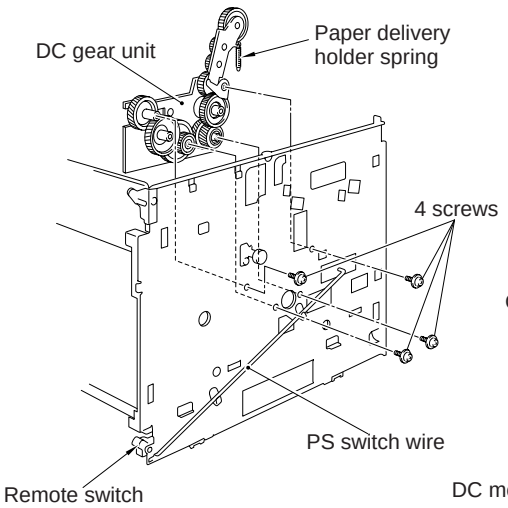

Figure 4.58

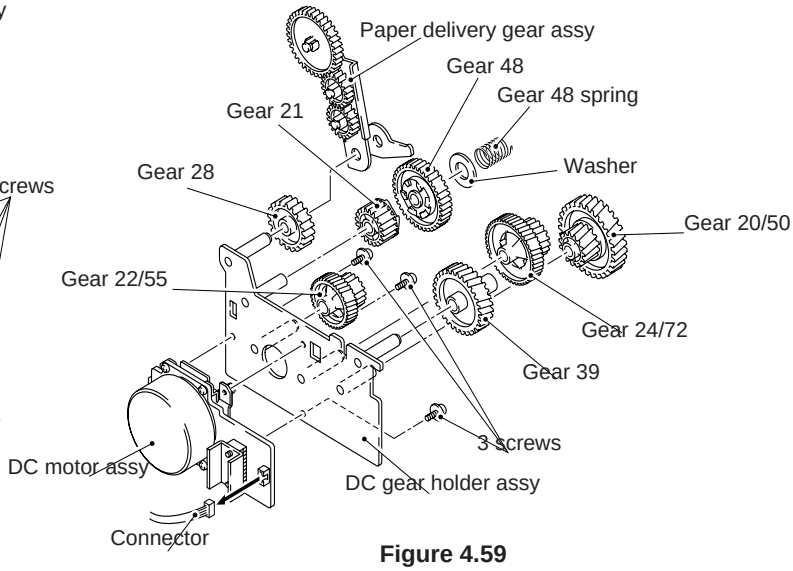

Figure 4.59

1.32 PS Switch Wire, Remote Switch

(1) Pull out the PS switch wire from the remote switch and the switch attachment.

Lift slightly the wires when pulling them out. This is in order to release the chassis caught at 2 places.

(2) Remove the remote switch from the chassis.

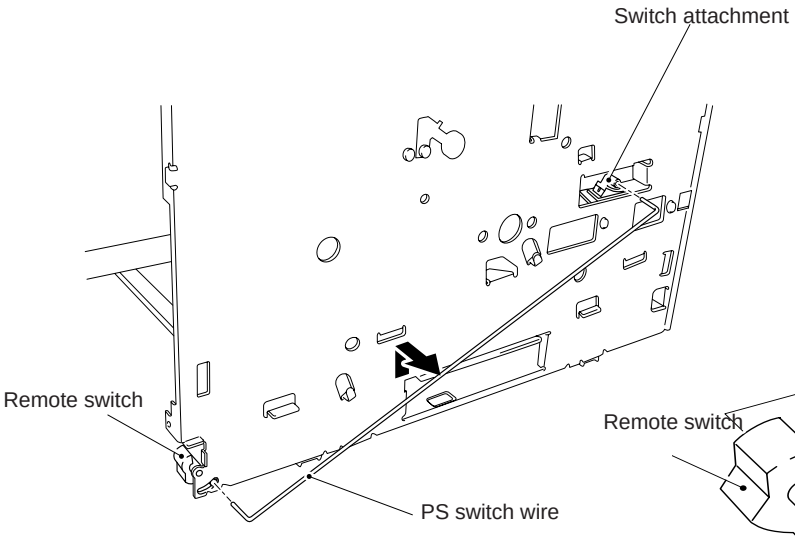

Figure 4.60

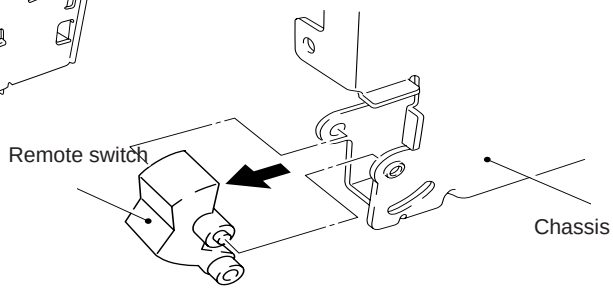

Figure 4.61

1.33 High-Voltage Power Supply PCB

(1) Loosen the 2 screws.

(2) Hold the head of 4 resin spacers and lift this side of PCB (Ⓐ).

(3) Slide the PCB to the opposite side (Ⓑ).

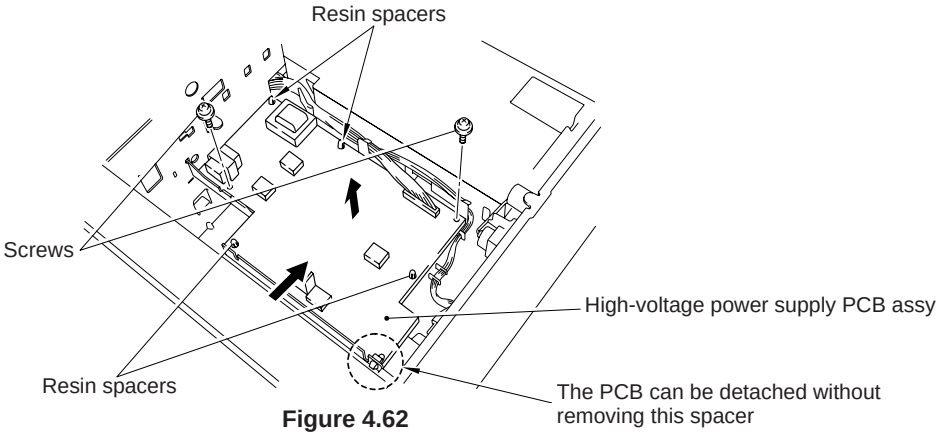

Figure 4.62

1.34 Low-Voltage Power Supply PCB Assy

(1) Be sure to remove the heat insulation cover before removing the low-voltage power supply block.

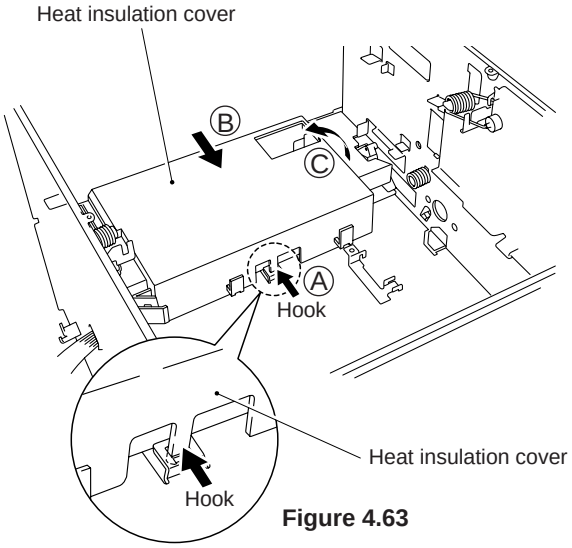

Figure 4.63

(2) Remove the PS switch wire.

(3) Loosen the 2 screws on the side.

(4) Loosen the 4 screws on the top.

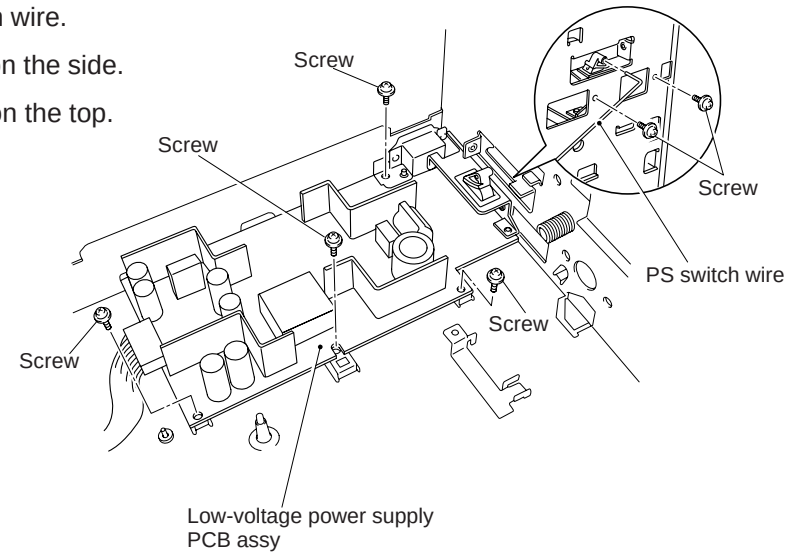

Figure 4.64

1.35 Toner Cartridge (EP-ED Cartridge)

(1) Remove the toner cartridge from the body.

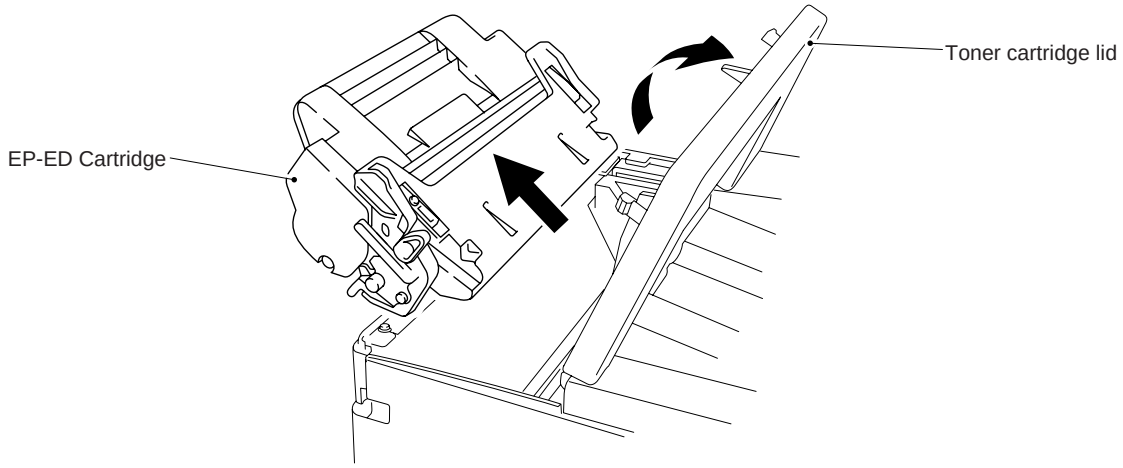

Figure 4.65

1.36 Paper Tray

(1) Release the roller holder fixing pawl and remove the roller holder by pulling it out upward.

(2) Remove the roller.

(3) Remove the separation pad assy (pull it out by turning it) .

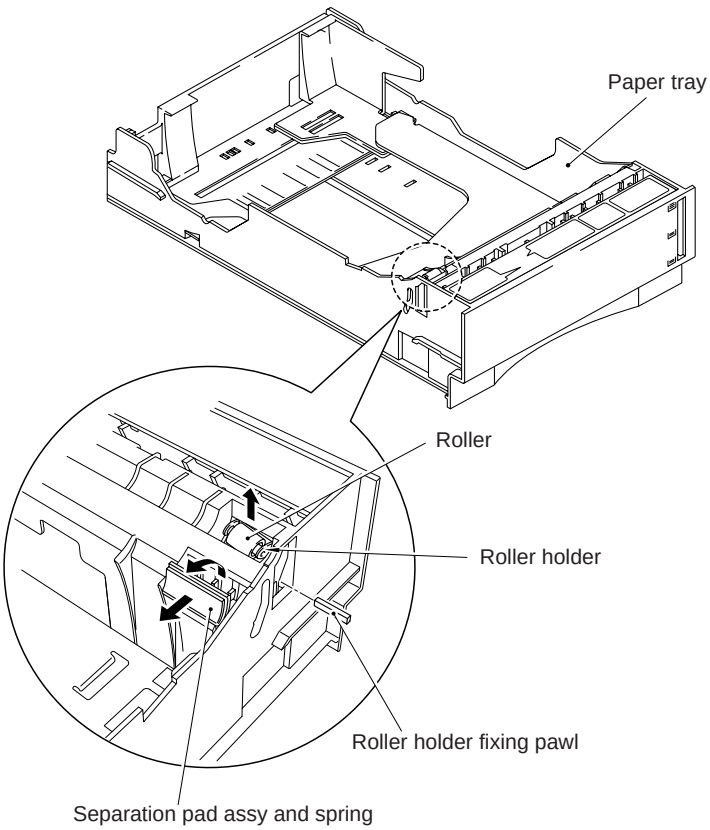

Figure 4.66

(4) Remove the tray gear holder from the other side by loosening the 3 screws and remove the gear 56T link.

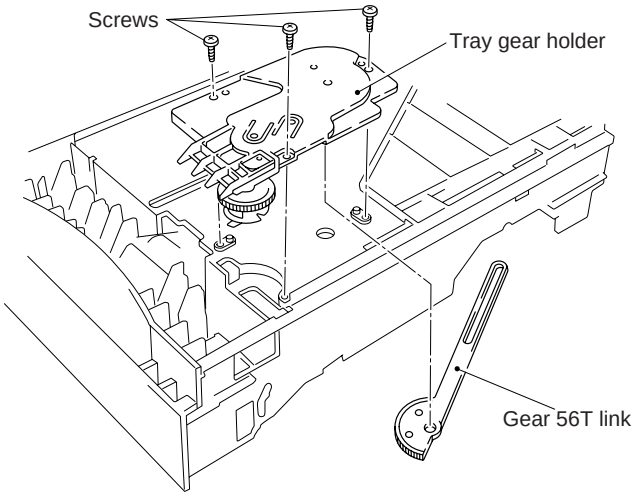

Figure 4.67

CHAPTER V MAINTENANCE AND SERVICING

1. PERIODICAL REPLACEMENT PARTS

Periodical replacement parts are the parts to be replaced periodically to maintain product quality at same level (in other words the parts which would affect the product greatly if they lost their function even if they are not damaged or there is no change in their appearance.)

It is recommended to replace such parts on the occasion of a periodical service which is carried out before or after the specified number of sheets are used, whichever more immediate to that time.

● This machine contains no periodical replacement parts.

2. CONSUMABLE PARTS STANDARD ENDURANCE TABLE

The table below shows the suspected mean life (in terms of number of sheets) of the consumable parts, that is the parts which subject to deterioration or damage, should be replaced at least once during the period of warranty of the product only when the parts have such a failure.

Table 5.1

No.	Description	Part No.	Qty.	Service life (number of print)	Remarks
1	Fixing unit	UH2791001 (UH2601001)	1	(100,000)	120V
	Fixing unit	UH2792001 (UH2602001)	1	(100,000)	230V
2	Pick-up roller assy MP Pick-up roller assy cassette	UH2362001 UH2362001	2	(100,000)	
3	Separation pad MP Separation pad cassette	UH2393001 UH2393001	2	(100,000)	
4	Transfer roller assy	UH2788001 (UH2323001)	1	(100,000)	

Note: The above table shows only estimated value, so these value are subject to change without prior notice.

3. LIST OF STANDARD TOOLS

The standard tool set required for servicing the printer is as listed below. These tools are commercially available on the market.

Table 5.2

No.	Description	Remarks
1	Tool box	
2	Lead cable	
3	Feeler gauge	
4	Compression spring scale (0 – 1kg)	For checking cassette spring strength
5	Phillips screwdriver	M4, M5
6	Phillips screwdriver	M3, M5
7	Phillips screwdriver	M4, M5
8	Phillips screwdriver	M4, M5
9	Flat-blade screwdriver	
10	Precision flat-blade screwdriver	
11	Allen wrench set	
12	File, fine	
13	Allen (hex) screwdriver	
14	Diagonal-cutting pliers	M4
15	Needle-nose pliers	
16	Pliers	
17	Snap-ring pliers, ext. 19 – 30 mm	
18	Crimper	
19	Tweezers	
20	Ruler	
21	Mallet, plastic head	
22	Brush	
23	Penlight	
24	Bottle, plastic	
25	Solder	
26	Desoldering wick	
27	Oiler	
28	Jar, plastic	
29	Digital logic tester	
30	Digital multimeter	
31	Soldering iron	
32	Digital memory scope or syncroscope (100 MHz or over)	
33	ROM remover	

4. LIST OF LUBRICANTS AND CLEANERS

Table 5.3

No.	Material name	Components	Use	Remarks
1	Alcohol ethyl (pure or denatured) or isopropyl (pure or denatured)	C_2H_5OH, $(CH_3)_2$ CHOH	Cleaning of plastic, rubber, and external parts	• Purchase locally
2	MEK (methyl ethyl ketone)	$CH_3CO\text{-}C_2H_5$	Cleaning for oil and toner stains	• Purchase locally • Highly flammable; keep away from flame
3	Lubricating oil (silicon grease KS64F)		For fuser	• Tool No. ZX-43D • Equivalent oil may be used
4	Lubricating oil (Moly kote EM-30L)		For drive mechanism	• Tool No. ZX-43N • Equivalent oil may be used

CHAPTER VI TROUBLESHOOTING

1. INTRODUCTION

1.1 Initial Check

(1) Operating environment

Check if:

1) The source voltage stays within ±10% from the rating voltage shown on the rating label.
2) The printer is installed on a solid, level surface.
3) The room temperature is maintained between 10°C and 32.5°C. The relative humidity is maintained between 20% and 80%.
4) The printer is not exposed to ammonia fumes or other harmful gases.
5) The printer is not located in a hot or humid area (such as near water or a humidifier), in a cold place (such as outlet of an air conditioner), near open flames or in a dusty place.
6) The printer is not exposed to direct sunlight.
7) The room is well-ventilated.

(2) Printer paper

Check if:

1) A recommended type of print paper is being used (if the paper is too thick or too thin, or tends to curl, paper jams or paper feed problems may occur, or prints may be blurred).
2) The print paper is damped. [If so, use fresh paper, and check whether the print quality improve or not.]

(3) Consumables

Check if:

1) The message "16 TONER EMPTY" is not shown on the status display when a cartridge is installed in the printer . [If the message is displayed, replace the cartridge with a new one. If blank spots occur on prints, take out the EP-ED cartridge and slowly rock it to distribute the toner evenly.]

(4) Others

Check if:

The transfer guide and feed guide are clean. [If not, clean them with a damp cloth.]

Condensation:

When the printer is moved from a cold room into a warm room in cold weather, condensation may occur inside the printer, causing various problems as below:

1) Condensation on the optical surfaces such as the scanning mirror, lenses, the reflection mirror and the protection glass may cause the print image to be light.
2) If the photosensitive drum is cold, the electrical resistance of the photosensitive layer gets high, making it impossible to obtain a correct contrast in printing.
3) Condensation on the pick-up guide and feed guide plates may cause paper feed troubles.

If condensation has occurred, wipe the effected units or parts with a dry cloth.

If an EP-ED cartridge is unsealed soon after moved from a cold room to a warm room, condensation may occur inside the cartridge, which may cause incorrect image. Instruct the user to allow the cartridge to come to room temperature before unsealing it. This will take one to two hours.

1.2 Basic Procedure

If a malfunction or incorrect print is appeared, make an initial check, then follow the basic procedure below:

(1) Check the status display. If any message is shown, see Section 4 for troubleshooting.

(2) If an incorrect image is found, see Section 3.1 to determine the defect type and Section 3.2 for image troubleshooting.

2. TEST PRINTING AND MECHANICAL CHECK

2.1 Test Printing

If an image problem occurs, follow the procedure below to produce a test print.

1) Enter the offline mode.

2) Press the SHIFT and TEST switches simultaneously, so the printer enters the test print mode.

3) Press the ▲ or ▼ switch to appear the message "TEST PRINT" then press the SET switch.

The message "05 TEST PRINT" will appear on the status display of the control panel and the DATA lamp will come on. Then, the printer will produce the test print.

4) Determine the image trouble type and see Section 3 for troubleshooting.

TEST PRINT

Figure 6.1

3. IMAGE DEFECTS

3.1 Image Defect Examples

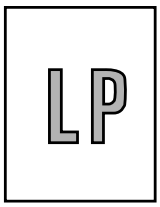

I-1 Light

I-2 Dark

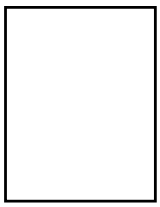

I-3 Completely blank

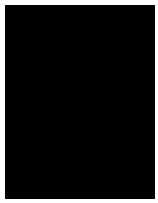

I-4 All black

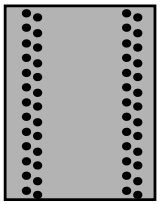

I-5 Polka dots

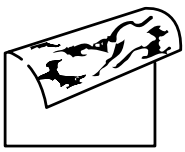

I-6 Dirt on back of paper

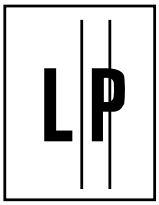

I-7 Black vertical streaks

I-8 Black and blurred vertical stripes

I-9 Black and thin horizontal streaks

I-10 Black and blurred horizontal stripes

I-11 Dropout

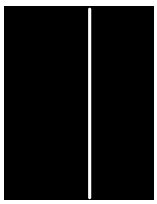

I-12 White vertical streaks

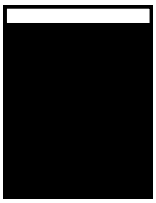

I-13 Faulty registration

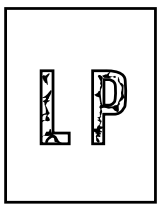

I-14 Poor fixing

Figure 6.2

3.2 Troubleshooting Image Defects

I-1	Light

Possible cause	Step	Check	Result	Remedy
Toner shortage	1	Does printed image improve when the EP-ED cartridge is replaced?	Yes	Replace EP-ED cartridge.
ECONOMY mode	2	Is the ECONOMY mode active?	Yes	Cancel the ECONOMY mode.
Printing density setting	3	Does printed image improve when printed density setting is changed on the control panel ?	Yes	Adjust the proper setting on the control panel.
—	4	During a printing, open the toner cartridge lid in the printer and pull out the EP-ED cartridge. Open the drum shutter of the EP-ED cartridge and check the toner image on the drum. Is the toner image before transfer is light?	Yes	Go to the Step 9.
Paper failure	5	Does the print quality improve when fresh paper is used?	Yes	Use recommended paper.
Transfer roller failure	6	Does the print quality improve when print is made with transfer roller changed?	Yes	Clean the transfer roller [Use dry lint-free paper (producing little paper dust) to clean the transfer roller. Never use solvents] and, if dirts subsist, replace the transfer roller assy.
Transfer input signal error	7	Do the pins 7 and 8 of the connector P6 on the main PCB have the following value respectively when a sheet of paper is fed from the MP tray? P6-7 pin (HVT2) --- Change in voltage from 15V approx. to 0V about 1 second after paper feeding. P6-8 pin (HVT3) --- Change in voltage from 9V approx. to 0V just when the voltage at the 7 pin changes from 0V to 15V.	No	Replace the main PCB assy or the harness.
Dirt on power supply terminal Failure in the transfer high-voltage circuit	8	Clean the transfer roller right end bearing, the check continuity between the transfer roller power supply spring and the terminal of the high-voltage transfer unit. Is there continuity?	No	Clean the contact to assure the continuity.
			Yes	Replace the high-voltage power supply assy.
Insufficient LD light	9	Does print quality improve when the scanner unit is improved?	Yes	Replace the scanner unit or the harness.

Continued to the following page

Possible cause	Step	Check	Result	Remedy
Development input signal error	10	Do the pins 3, 4 and 5 of the connector P6 on the main PCB have the following value respectively when a sheet of paper is fed from the MP tray? P6-3 pin (DBAC) --- Change in voltage from 6V approx. to 0V just when a sheet of paper is fed from the registration unit. P6-4 pin (DBDC) --- Change in voltage from 9V approx. to 0V just when a sheet of paper is fed from the registration unit. P6-5 pin (DNSTY) --- Change in voltage to 2.5V just when a sheet of paper is fed.	No	Replace the scanner unit or the harness.
Dirt on power supply terminal Failure in the development high-voltage circuit	11	Is there any dirt on the cartridge side development terminal of the transfer unit and on the terminal of the high-voltage power supply development unit? (is there continuity between them?)	No	Clean the contacts to assure the continuity.
			Yes	Replace the high-voltage power supply PCB assy.

I-2	Dark

Possible cause	Step	Check	Result	Remedy
Density setting	1	Does printed image improve when density setting is changed on the control panel?	Yes	Adjust the proper setting on the control panel.
EP-ED cartridge	2	Does printed image improve when the EP-ED cartridge is replaced?	Yes	Replace the EP-ED cartridge.
Dirt on the grounding terminal	3	Does printed image improve when continuity is improved by cleaning the EP-ED cartridge grounding terminal and the printer unit grounding terminal?	Yes	Clean the contacts to assure the continuity.
Charging input signal error	4	Do the pins 1, 2 and 5 of the connector P6 on the main PCB have the following value respectively when a sheet of paper is fed from the MP tray? P6-1 pin (HV1AC) --- Change in voltage from 6V approx. to 0V just when a sheet of paper is fed. P6-2 pin (HV1DC) --- Change in voltage from 9V approx. to 0V just when a sheet of paper is fed. P6-5 pin (DNSTY) --- Change in voltage to 2.5V just when a sheet of paper is fed.	No	Replace the main PCB assy or the harness.
Dirt on power supply terminal Failure in the charging high-voltage circuit	5	Is there any dirt on the cartridge side charging terminal of the transfer unit and on the terminal of the high-voltage power supply charging unit? (is there continuity between them?)	No	Clean the terminal to assure the continuity.
			Yes	Replace the high-voltage power supply PCB assy.

I-3	Completely blank

Possible cause	Step	Check	Result	Remedy
EP-ED cartridge	1	Does printed image improve when the EP-ED cartridge is replaced?	Yes	Replace the EP-ED cartridge.
Development input signal error	2	Do the pins 3, 4 and 5 of the connector? P6 on the main PCB have the following value respectively when a sheet of paper is fed from the MP tray? P6-3 pin (DBAC) --- Change in voltage from 6V approx. to 0V just when a sheet of paper is fed from the registration unit. P6-4 pin (DBDC) --- Change in voltage from 9V approx. to 0V just when a sheet of paper is fed from the registration unit. P6-5 pin (DNSTY) --- Change in voltage to 2.5V just when a sheet of paper is fed.	No	Replace the main PCB assy or the harness.
Failure in power supply terminal	3	Is there any dirt on the cartridge side development terminal of the transfer unit and on the terminal of the high-voltage power supply development unit? (is there continuity between them?)	No	Clean the terminal to assure the continuity.
LD failure Failure in development high-voltage circuit	4	Does print quality improve when the scanner unit is improved?	Yes	Replace the scanner unit or the harness.
			No	Replace the high-voltage power supply PCB assy.

I-4	All black

Possible cause	Step	Check	Result	Remedy
Beam detection error	1	Is the printer hung up with the PRINT message remaining on the display even after a printing when only a copy is printed?	Yes	Replace the scanner unit or the harness.
EP-ED cartridge	2	Does printed image improve when the EP-ED cartridge is replaced?	Yes	Replace the EP-ED cartridge.
Charging input signal error	3	Do the pins 1 and 2 of the connector P6 on the main PCB have the following value respectively when a sheet of paper is fed from the MP tray? P6-1 pin (HV1AC) --- Change in voltage from 6V approx. to 0V just when a sheet of paper is fed. P6-2 pin (HV1DC) --- Change in voltage from 9V approx. to 0V just when a sheet of paper is fed.	No	Replace the main PCB assy or the harness.
Dirt on power supply terminal Failure in the charging high-voltage circuit LD failure	4	Is there any dirt on the cartridge side charging terminal of the transfer unit and on the terminal of the high-voltage power supply charging unit? (is there continuity between them?)	No	Clean the contact to assure the continuity
			Yes	Replace the high-voltage power supply PCB assy and, if the problem is not resolved, replace the scanner unit or the harness.

I-5	Polka dots

Possible cause	Step	Check	Result	Remedy
Failure in static-charge eliminator	1	Is there any dirt on the static-charge eliminator?	Yes	Clean the static-charge eliminator.
Static-charge eliminator grounding failure	2	Is there continuity between the static-charge eliminator and the chassis?	Yes	Ensure the grounding of the static-charge eliminator.
Dirt on the transfer roller	3	Does print quality improve when the transfer roller is replaced?	Yes	Clean the transfer roller [Use dry lint-free paper (producing little paper dust) to clean the transfer roller. Never use solvents] and, if the dirt remains, replace the transfer roller assy.

I-6	Dirt on back of paper

Possible cause	Step	Check	Result	Remedy
Dirt on the PF guide	1	Is there any dirt on the back of the paper feed guide and the jam remove cover near the static-charge eliminator?	Yes	Clean the PF guide or the jam remove cover.
—	2	Open the toner cartridge lid in the printer, pull out the EP-ED cartridge and remove the paper in the printer. Is there already dirt on the back of the sheet thus removed?	No	Go to Step 6.
Dirt on the transfer roller	3	Is there any dirt on the transfer roller?	Yes	Clean the transfer roller and, if the dirt remains, replace the transfer roller assy.
Transfer input signal error	4	Does the voltage at the 6 pin (HVT1) of the connector P6 on the main PCB change from 9V to 0V for about 0.8 seconds?	No	Replace the main PCB assy or the harness.
Dirt on power supply terminal Failure in the transfer high-voltage circuit	5	Clean the transfer roller right end bearing, the check continuity between the transfer roller power supply spring and the terminal of the high-voltage transfer unit. Is there continuity?	No	Clean the contact to assure the continuity.
			Yes	Replace the high-voltage power supply PCB assy.
Dirt the fixing guide	6	Is there any dirt on the fixing unit inlet guide?	Yes	Clean the fixing unit inlet guide.
Fixing roller grounding failure Fixing unit failure	7	Are the upper and lower rollers of the fixing unit securely connected to the chassis via the diode?	No	Ensure the grounding.
			Yes	Replace the fixing unit.

I-7 I-8	Black vertical streaks or Blurred vertical line

Possible cause	Step	Check	Result	Remedy
EP-ED cartridge Fixing unit damaged	1	During a printing, open the toner cartridge lid in the printer and pull out the EP-ED cartridge. Open the drum shutter of the EP-ED cartridge and check the toner image on the drum. Are there vertical stripes on the drum?	Yes	Replace the EP-ED cartridge.
			No	Replace the fixing unit.

I-9	Black and thin horizontal streaks

Possible cause	Step	Check	Result	Remedy
Beam detection error	1	–	–	Replace the scanner unit or the harness and, if the problem is not resolved, replace the main PCB assy.

I-10	Black and blurred horizontal stripes

Possible cause	Step	Check	Result	Remedy
Drum or charging roller failure	1	Do stripes appears at 95 mm or 38 mm interval?	Yes	Replace the EP-ED cartridge.
Fixing unit failure	2	Do stripes appears at 80 mm interval?	Yes	Replace the fixing unit.

I-11	Dropout

Possible cause	Step	Check	Result	Remedy
Paper failure	1	Is recommended paper used?	No	Use recommended paper.
Paper soaked	2	Is paper soaked?	Yes	Store the paper in packing paper to keep it from soaking.
EP-ED cartridge	3	Does printed image improve when the EP-ED cartridge is replaced?	Yes	Replace the EP-ED cartridge.
Transfer roller failure	4	Is there any dirt on the transfer roller or is it deformed?	Yes	Clean or replace the transfer roller assy.
Transfer input signal error	5	Do the pins 7 and 8 of the connector P6 on the main PCB have the following value respectively when a sheet of paper is fed from the MP tray? P6-7 pin (HVT2) --- Change in voltage from 15V approx. to 0V about 1 second after a sheet of paper is fed. P6-8 pin (HVT3) --- Change in voltage from 9V approx. to 0V when the voltage at the pin 7 changes from 0V to 15V.	No	Replace the main PCB assy or the harness.
Dirt on power supply terminal	6	Clean the transfer roller right end bearing, the check continuity between the transfer roller power supply spring and the terminal of the high-voltage transfer unit. Is there continuity?	No	Clean the contact to assure the continuity.
Failure in the transfer high-voltage circuit			Yes	Replace the high-voltage power supply PCB assy.

I-12	White vertical streaks

Possible cause	Step	Check	Result	Remedy
Toner bias	1	Do white vertical stripes appear like a band?	Yes	Rock the cartridge, set it again in the printer and check again the print quality.
Drum damage	2	Does print quality improve when the EP-ED cartridge is replaced?	Yes	Replace the EP-ED cartridge.
Transfer roller failure	3	Is the transfer roller damaged or deformed?	Yes	Replace the transfer roller assy.
Dirt on the reflecting mirror	4	Is the problem solved when the scanner unit is replaced?	Yes	Clean the reflecting mirror with a cleaning tip or replace the scanner unit.

I-13	Faulty registration

Possible cause	Step	Check	Result	Remedy
Top margin setting error	1	Does self test printing have no problem?	Yes	Check again the top margin setting in the printing data.
Paper load in the cassette	2	Is over-amount of paper than specified load on the cassette?	Yes	Reduce the paper load below the specified limit.
Paper failure	3	Does print quality improve when recommended paper is used?	Yes	Use recommended paper.
Paper failure	4	Is paper curled?	Yes	Use recommended fresh paper without curl.
Improper Y offset setting	5	Does print quality improve when Y offset setting is changed?	Yes	Ajust Y offset setting to an appropriate value.
Jam remove cover failure	6	Is the jam remove cover deformed?	Yes	Replace the jam remove cover.
Failure in regist sensor actuator motion	7	Does the regist sensor actuator operate smoothly?	No	Reassemble the actuator and, if the problem is not resolved, replace the actuator.
Regist sensor failure	8	Is the voltage at the pin 5 of the connector P3 of the main PCB 5V when no paper passes and 0V when paper passes?	No	Replace the paper feed/size-sw PCB assy or the harness and, if the problem remains, replace the main PCB assy.
Paper feed roller failure			Yes	Replace the paper feed roller assy.

I-14	Poor fixing

Possible cause	Step	Check	Result	Remedy
Fixing unit release spacer not removed	1	Is the fixing unit release spacer removed?	No	Remove the fixing unit release spacer.
MEDIA TYPE setting	2	Is the MEDIA TYPE set to TRANSPARENCY?	Yes	Set the MEDIA TYPE to REGULAR or THICK PAPER.
Paper failure	3	Is thick paper over than 36lb (135g/m^2) used?	Yes	Instruct the user to use the paper whose thickness is less than the recommended value.
Thermistor failure	4	Is the voltage at the pin 3 of the connector P11 of the main PCB is controlled within 1.80±0.10V during continuous printing?	No	Replace the fixing unit.
Fixing unit failure			Yes	Replace the fixing unit.

4. TROUBLESHOOTING OF MALFUNCTIONS

M-1	No DC power supplied

Possible cause	Step	Check	Result	Remedy
PCBs	1	Does any PCB have the short circuit between +24V and 0V,+5V and 0V or +24V and +5V?	Yes	Replace the PCB having the short circuit.
Low-voltage power supply PCB Main PCB LV harness DC fan motor	2	Is the voltage of P3-8 in the low-voltage power supply PCB connector 0V?	Yes	Replace the low-voltage power supply PCB assy.
			No	Replace the main PCB assy, the LV harness or the DC fan motor.

M-2	Malfunction of LCD display on the control panel.

Possible cause	Step	Check	Result	Remedy
LCD module Control panel PCB Switch flat cable Main PCB	1	Dose the voltage of the following signals vary to 5V or 0V when the LCD displays are changed through switch operations? (Check following signals using the digital memory scope with the trigger function for this check) Signal — Main PCB — Panel PCB — LCD PAD4 — P1-9 — P1-13 — P2-4 — 7 PAD5 — P1-5 — P1-17 — P2-3 — 8 PAD6 — P1-11 — P1-11 — P2-2 — 9 PAD7 — P1-4 — P1-18 — P2-1 — 10 LCDRS — P1-3 — P1-19 — P2-7 — 4 LCDE — P1-2 — P1-20 — P2-5 — 6	Yes	Replace the control panel unit.
			No	Replace the main PCB assy, the switch flat cable or the control panel unit.

M-3	Malfunction of control panel LED lamps.

Possible cause	Step	Check	Result	Remedy
LED lamps Control panel PCB Switch flat cable Main PCB	1	Dose the voltage of the following signals stay 0V while the "04 SELF TEST " is displayed after switching the power on and stay 5V for about 0.5 seconds after the message goes off? (Do the LED lamps turn on and off in response to the signal levels of 0V and 5V?) Signal — Main PCB — Panel PCB LED1(ON LINE) — P1-13 — P1-9 LED2(READY) — P1-7 — P1-15 LED3(DATA) — P1-1 — P1-21 LED4(ALARM) — P1-6 — P1-16	Yes	Replace the control panel unit.
			No	Replace the main PCB assy or the switch flat cable.

M-4	Malfunction of control panel switches.

Possible cause	Step	Check	Result	Remedy
Mis-operation	1	Are the switchs operated according to the operation manual?	No	Operate the switches correctly following the operation manual.
Switch Control panel PCB Switch flat cable Main PCB	2	When a switch is pressed,does the voltage of the following signals change from 5V to 0V? Signal — Main PCB — Panel PCB SW8(SEL) — P1-8 — P1-14 SW7(MODE/EMULATION) — P1-10 — P1-12 SW6(FONT/ECONOMY) — P1-12 — P1-10 SW5(FORM FEED/FEEDER) — P1-14 — P1-8 SW4(SET/COPY) — P1-16 — P1-6 SW3(CONTINUE/SHIFT) — P1-18 — P1-4 SW2(DOWN/RESET) — P1-20 — P1-2 SW1(UP/TEST) — P1-21 — P1-1	Yes	Replace the Main PCB assy.
			No	Replace the control panel unit or the switch flat cable.

M-5	Malfunction of buzzer

Possible cause	Step	Check	Result	Remedy
Operational error	1	Is the "Buzzer on mode "selected according to the operation manual? (To alternate the buzzer on/off mode selection, press the MODE switch and select the "Advanced mode".)	No	Set the buzzer on mode.
Main PCB Buzzer	2	Check the buzzer signal with a oscilloscope. Is the pulse of 4KHz output?	Yes	Replace the main PCB assy.
			No	Replace the main PCB assy.

M-6	"12 COVER OPEN" is displayed even if the upper cover is closed

Possible cause	Step	Check	Result	Remedy
Upper cover Main PCB	1	Does the upper cover hook press the actuator of the interlock switch on the main PCB correctly when upper cover is closed?	No	Replace the upper cover assy.
			Yes	Replace the main PCB assy.

M-7	" CHECK XX TRAY " is displayed even if a paper-loaded cassette is mounted (or even if a paper is set on MP tray) XX is MP/T1/T2

Possible cause	Step	Check	Result	Remedy
Mis-operation	1	Is the paper feed mode set correctly?	No	Set paper feed mode correctly.
Actuator	2	Does the actuator for the paper empty sensor operate smoothly?	No	Reassemble or replace the actuator.
Paper empty sensor Feed flat cable	3	Does the voltage of P5-3 (or P5-14) in the Paper feeder PCB connector rise from 0V to 5V when the paper empty sensor is covered?	No	Replace the paper feed/size-sw PCB assy or feed flat cable .
Paper feed flat cable Main PCB	4	Does the voltage of P3-3 (or P3-14) in the main PCB connector rise from 0V to 5V when the paper empty sensor is covered?	No	Replace the feed flat cable.
			Yes	Replace the main PCB assy.

M-8	"14 NO CARTRIDGE " is displayed

Possible cause	Step	Check	Result	Remedy
EP-ED cartridge	1	Is an EP-ED cartridge installed correctly?	No	Install the EP-ED cartridge correctly.
Transfer unit electrode	2	Is the electrode of the transfer unit dirty?	Yes	Clean the electrode of the transfer unit.
High-voltage power supply PCB	3	Is the voltage of P4-13 in the high-voltage power supply PCB connector higher than that of P4-11 over 2.5V?	Yes	Replace the high-voltage power supply PCB assy.
HV harness Main PCB	4	Is the voltage of P6-13 in the main PCB connector higher than that of P6-11 over 2.5V?	Yes	Replace the HV harness.
			No	Replace the main PCB assy.

M-9	"16 TONER EMPTY" is displayed

Possible cause	Step	Check	Result	Remedy
EP-ED cartridge	1	Take the EP-ED cartridge out of the printer and rock it to distribute the toner evenly. When the cartridge is returned to the printer, does the LCD show "00 READY"?	Yes	The problem was caused by toner onesided due to too little toner remaining. Prepare to replace the new cartridge.
High-voltage electrode	2	Are the developing bias or the toner sensor electrode of the high-voltage power supply PCB assy dirty?	Yes	Clean the electrode.
High-voltage power supply PCB	3	Is the voltage of P4-13 in high-voltage power supply PCB connector higher than that of P4-11, when the EP-ED cartridge which is full with toner is installed?	Yes	Replace the high-voltage power supply PCB assy.
HV harness Main PCB	4	Is the voltage of P6-13 in the main PCB connector higher than that of P6-11?	Yes	Replace the HV harness.
			No	Replace the main PCB assy.

M-10	"13 JAM XXXXXX" is not displayed even if a paper jam has occured (or is displayed even if a paper jam has not occurred) XXXXXX is TRAYS/INSIDE/REAR/DUPLEX.

Possible cause	Step	Check	Result	Remedy
Actuator	1	Does the actuator of the paper delivery sensor or the registration sensor operate smoothly?	No	Reassemble or replace the paper delivery actuator and regist sensor actuator.
Paper delivery sensor Regist sensor	2	Does the voltage of P2-1 in the fixing PCB connector rise from 0V to 5V when the eject sensor is covered, or the voltage of P5-5 in the paper feeder PCB connector rise from 0V to 5V when the registration sensor is covered?	No	Replace the fixing PCB assy or the paper feed/size-sw PCB assy.
Fuser harness Feed flat cable	3	Does the voltage of P11-1 in the main PCB connector rise from 0V to 5V when the eject sensor is covered, or the voltage of P3-5 in the main PCB connector rise from 0V to 5V?	No	Replace the fuser harness or the feed flat cable.
			Yes	Replace the main PCB assy.

M-11	"54 MOTOR MALF" is displayed (The main motor rotation disabled)

Possible cause	Step	Check	Result	Remedy
Low-voltage power supply PCB LV harness Main PCB	1	Is the voltage of P7-1 in the main PCB connector +24V?	No	Replace the main PCB assy low-voltage power supply PCB assy, or the LV harness.
DC motor harness DC motor assy.	2	Does the voltage of P7-4 in the main PCB connector drop from 5V to 0V after dropping the voltage of P7-3 from 5V to 0V?	No	Replace the main PCB assy.
			Yes	Replace the DC motor harness or the DC motor assy.

M-12	No paper pick-up from cassette (or MP tray)

Possible cause	Step	Check	Result	Remedy
Mis-operation	1	Is the paper feed mode set correctly?	No	Set paper feed mode correctly.
Main PCB	2	Does the voltage of P3-20 (or 19) in the main PCB connector rise from 0V to 5V and is a pulses having about 11ms period generated at P3-6, 7, 8 ,9 pin?	No	Replace the main PCB assy.
Feed flat cable	3	Does the voltage of P5-20 (or 19) in the paper feeder PCB. Connector rise from 0V to 5V and is the pulses having about 11ms period generated at P3-6, 7, 8 ,9 pin?	No	Replace the feed flat cable.
Paper feeder PCB	4	Does the voltage of P3-1 (or P4-1) in the paper feeder PCB connector drop from 24V to 0V and is the chopping pulses generated at P1-1, 2, 5 ,6 pin?	No	Replace the Paper feed/size-SW PCB assy.
Pick-up(or MP Pick) solenoid	5	Does the pick-up (or MP Pick) solenoid operate?	No	Replace the pick-up (or MP Pick) solenoid.
Paper feed motor	6	Does the pick-up motor rotate?	No	Replace the paper feed motor assy.

M-13	"55 HIGH VOL MALF" is displayed (Faulty output from the H.V.P.S. ASSY)

Possible cause	Step	Check	Result	Remedy
Main PCB	1	When a test print is carried out, is the voltage of the each pin in the main PCB connector P6 turned on and off as the below list?	No	Replace the main PCB assy.
HV harness High-voltage power supply PCB	2	Is the voltage of the each pin of the high-voltage power supply PCB connector P4 turned on and off?	No	Replace the HV harness.
			Yes	Replace the high-voltage power supply PCB assy.

Pin No.	Signal name	Voltage (reference value)	Remarks
①	/HV1AC	0V 5.8V	
②	/HV1DC	0V 8.6V	
③	/DBAC	0V 6.3V	
④	/DBDC	0V 8.6V	
⑤	DNSTY	1.0 ~ 4.0V	Default: 2.5V
⑥	/HVT1	0V 8.7V	
⑦	/HVT2	0V 15.1V	
⑧	/HVT3	0V 9.0V	
⑨	HVT4	0.4 ~ 5.0V	
⑩	HVTFB	0.4 ~ 4.0V	
⑪	TONER1	0.0 ~ 3.5V	
⑫	0V	0V	
⑬	TONER2	2.0 ~ 4.5V	
⑭	24VRET	0V	
⑮	5V	5V	
⑯	24V	24V	

M-14	"50 FUSER MALF" is displayed

Possible cause	Step	Check	Result	Remedy
Thermal fuse	1	Is the thermal fuse located in the fixing unit conductive?	No	Replace the fixing unit.
Thermistor	2	Remove the fixing unit from the printer and measure the resistance between two pins of the 2 pin connector on the fixing PCB. Is the measured resistance within the range of 1.0 MΩ – 1.6MΩ (normal temperature)?	No	Replace the fixing unit.
Fixing heat roller	3	Is the fixing heat roller located in the fixing unit conductive?	No	Replace the fixing heat roller.
Low-voltage power supply PCB	4	When the power is switched on, does the voltage at connector pin P4-1 on the main PCB go from 5V to 0V?	Yes	Replace the low-voltage power supply PCB assy.
Main PCB	5	Make sure if: The EP-ED cartridge is installed in the printer correctly. The upper cover of the printer is closed. A paper-loaded cassette is mounted.	No	Replace the main PCB assy.

Note: When the printer has detected a fixing unit malfunction, do not power on for about 15 minutes.

Even if the power is on, the printer will shut off the power supply to the fixing heat roller to prevent the fixing the unit from overheating.

M-15	"51 LASER BD MALF" is displayed

Possible cause	Step	Check	Result	Remedy
Main PCB Scanner harness	1	Is the problem remedied when the power off and on again?	No	Replace the main PCB assy , the SCN harness 4P,SCN flat cable 6P or the scanner unit.

M-16	"52 SCANNER MALF" is displayed

Possible cause	Step	Check	Result	Remedy
Main PCB Scanner harness Scanner unit	1	Is the problem remedied when the power off and on again?	No	Replace the main PCB assy, the SCN harness 4P, SCN flat cable 6P or the scanner unit.

M-17	"41 PRINT CHECK" is displayed

Possible cause	Step	Check	Result	Remedy
Main PCB	1	Does this problem frequently occur?	No	Since this is a temporary problem, remove the paper used when the error occurred and continue to print.
			Yes	Replace the main PCB assy.

5. TROUBLESHOOTING PAPER TRANSPORT PROBLEMS

5.1 Paper Jams

The paper path is divided into following three blocks:

1) The paper pick-up block, (The LCD display "JAM TRAYS")
2) The separation and feed block, (The LCD display "JAM INSIDE")
3) The fixing and paper delivery block, (The LCD display "JAM REAR")

Therefore, remedies for paper jam problems are described.

Respectively for these three blocks.

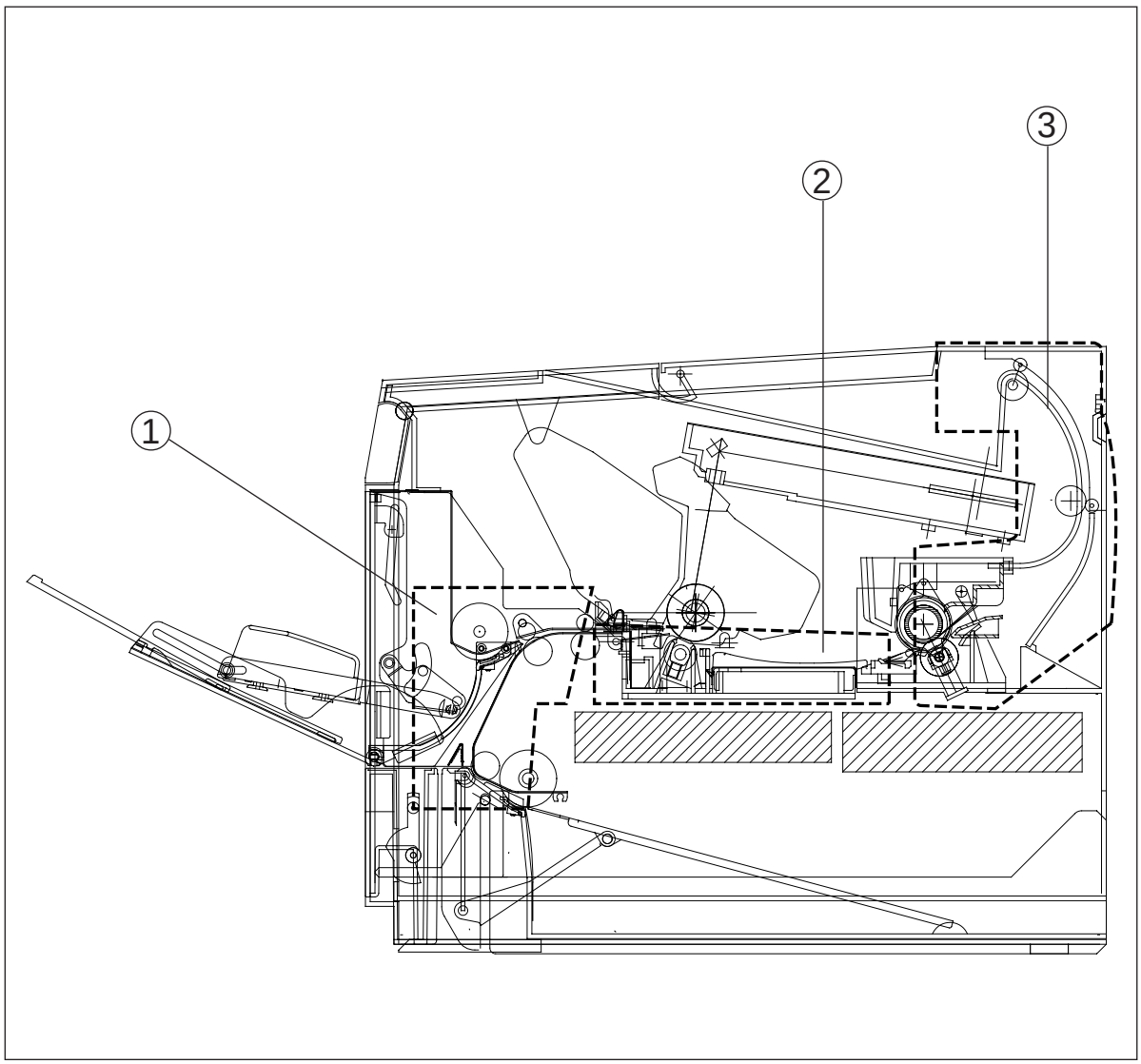

Figure 6.3

J-1a	Paper pick-up block (Pick miss)

Possible cause	Step	Check	Result	Remedy
Adjustment lever (spring pressure switching lever)	1	Is the position of the adjustment lever of the cassette corresponding to the paper sheet size?	No	Instruct the user to follow the correct method.
Print paper	2	Is a recommended type of paper being used ?	No	Instruct the user to use recommended type of paper.
	3	Is the print paper deformed, curled or wavy ?	Yes	Replace the print paper. Instruct the user how to storage.
Maximum paper load on the cassette	4	Does the amount of paper loaded on the cassette exceed the specified maximum paper load?	Yes	Instruct the user not to load more than the maximum amount of paper.
Pick-up rollers	5	Are the pick-up rollers defomed or worn?	Yes	Replace the pick-up rollers.
Separation pad	6	Is the separation pad deformed or worn, or is it detached?	Yes	Replace the pad assy.

For solenoid activation, no feeder motor operation and no regist sensor activation, refer to the item NO PAPER PICK-UP FROM THE CASSETTE in the column MALFUNCTIONS.

J-1b	Paper pick-up block (Oblique feed jam)

Possible cause	Step	Check	Result	Remedy
Adjustment lever (spring pressure switching lever)	1	Is the position of the adjustment lever of the cassette corresponding to the paper sheet size?	No	Instruct the user to follow the correct method.
Paper front guide	2	Is the paper front guide set in the correct position?	No	Set the paper front guide.
MP-feeding paper sheet	3	Are paper sheets set along the left wall?	No	Instruct the user to set paper sheets correctly?
Cassette-feeding sheet guide. Cassette rear, side guide	4	Is the cassette rear side guide set correctly?	No	Instruct the user to set it correctly?
MP-feeding paper sheet MP sheet guide		Is the MP sheet guide set correctly?	No	Instruct the user to set it correctly?

J-2	Separation and feed block (Paper jam)

Possible cause	Step	Check	Result	Remedy
Print Paper	1	Is a recommended type of paper being used?	No	Instruct the user to use recommended type of paper.
Static-charge eliminator	2	Is the static-charge eliminator dirty?	Yes	Clean the static-charge eliminator.
			No	Replace the transfer base assy.

J-3	Fixing and paper delivery block (Paper jam)

Possible cause	Step	Check	Result	Remedy
Fixing unit entrance guide	1	Is the entrance guide dirty?	Yes	Clean the entrance guide.
Fixing unit Separation guide	2	Is the separation guide worn or deformed?	Yes	Replace the fixing unit.
Paper delivery actuator	3	Is the paper sensor arm movement smooth?	Yes	Replace the fixing unit.
Changeover guide	4	Is the changeover guide movement smooth?	No	Replace the changeover guide.
Delivery rollers		Is the delivery roller movement smooth?	No	Replace the rear cover assy.
Paper jam remove cover Rear cover	5	Are there dirts or flaws on the ribs of the jam remove cover and rear cover?	No	Replace the jam remove cover and the rear cover assy.

5.2 Incomplete Paper Feed

F -1	Double feeding

Possible cause	Step	Check	Result	Remedy
Print paper	1	Is a recommended type of paper being used?	No	Instruct the user to use recommended type of paper.
Adjustment lever (spring pressure switching lever)	2	Is the position of the adjustment lever of the cassette corresponding to the paper sheet size?	No	Instruct the user to switch adjustment lever position.
Paper front guide	3	Is the paper front guide broken?	Yes	Replace the paper front guide.
Separation pad			No	Replace the separation pad.

F-2	Wrinkles

Possible cause	Step	Check	Result	Remedy
Print paper	1	Is a recommended type of paper being used?	No	Instruct the user to use recommended type of paper.
	2	Is the wrinkle problem solved if fresh paper is used?	Yes	Instruct the user in correct print paper storage procedure to be free from moisture.
Paper pick-up block	3	Is the paper already wrinkled or being fed askew?	Yes	Check the motion of the paper-pick up block.
Fixing unit entrance guide	4	Is the entrance guide dirty?	Yes	Clean the entrance guide.
Fixing unit			No	Replace the fixing unit.

6. OPERATION

6.1 Line Inspection Mode Procedure

(1) Mount the font cartridge, the flush memory card and the optional MIO board.

Note: Use a Hewlett Packard Company C2053A#C01 Word Perfect as font cartridge.

(2) While pressing the [△] switch, turn the power on.

The LCD will display: [LINE TEST]

(3) Press the [SET] switch to check if the LCD comes on.

[■■■■■■■■■■■■■■■■] All the LCD elements will come on simultaneously.

(4) Press the [CONTINUE] switch to check the pushbutton switch.

All the LEDs will go out and the LCD will display the characters shown below:

Press all the switches by turns.

[X X X X X X X X]

↓

[1 2 3 4 5 6 7 8]

Switch key numbers

[1] [2] [3] [4] [5] [6] [7] [8]

(5) Press the [CONTINUE] switch to check RAM size.

RAM SIZE = 2MB	2M (standard)
RAM SIZE = XXMB	XX : SIMM capacity + 2M
RAM SIZE ERROR	In case of error

(6) Press the [CONTINUE] switch to check the fan.

FAN HIGH SPEED	Make sure that the fan rotates at the high speed.

Press the [CONTINUE] switch.

FAN LOW SPEED	Make sure that the fan rotates at the low speed.

(7) Press the [CONTINUE] switch to check the 1st stage cassette.

TRAY 1 = A4	Appears when the cassette is set to A4 size.
TRAY 1 = LETTER	Appears when the cassette is set to letter size.
TRAY 1 = NO	Appears when no cassette is set.
CASSETTE ERROR!!	Appears in case of error.

(8) Press the [CONTINUE] switch to check the 2nd stage cassette.

TRAY 2 = A4	Appears when the cassette is set to A4 size.
TRAY 2 = LETTER	Appears when the cassette is set to letter size.
TRAY 2 = NO	Appears when no cassette is set.
CASSETTE ERROR!!	Appears in case of error.

(9) Press the [CONTINUE] switch to check multi purpose tray.

MP TRAY	Set paper on the MP tray.
MP TRAY OK!!	

(10) Press the CONTINUE switch to check the font cartridge.

CART CHECK START

↓

FONTCART OK!! — The font cartridge is normal.

(11) Flash memory check

CARD CHECK START

↓

FLASH OK!! — The flash memory is normal.

(12) MIO check

MIO CHECK START

↓

RAM SIZE = 2M

↓

Now initializing

↓

LJ WAIT 001P T1 — You can turn off the power when this message is displayed. If there is no toner cartridge or paper, the message "14 NO CARTRIDGE" will be displayed.

↓

LJ READY 001P T1

(13) Turn off the power.

Note: The checks on and after (10) are carried out automatically, and if an error is detected, on of the following messages will be displayed. Checks can be resumed if the CONTINUE switch is pressed.

FONTCART ERROR!!	Font cartridge error (this message is displayed if a font cartridge than a Hewlett Packard Company C2053A#C01 Word Perfect is used.)
NO FONTCART!!	No font cartridge is set.
FLASH ERROR!!	Flash memory error
NO FLASH CARD!!	No flash memory is set.
CHECK WP SWITCH	The Write Protect switch of the flash memory is on.
45 MIO ERROR	MIO error
NO MIO BOARD!!	No MIO board is set.
Now initializing	MIO error if this message remains displayed.

6.2 DRAM Test

(1) To start up the test program:

While pressing the ▼ Switch (RESET switch), turn the power on. ”DRAM CHECK” will be displayed. Then press CONTINUE switch to start DRAM checking.

(2) The LCD will display "START DRAM TEST" and the DATA lamp or ALARM lamp will be flashing.

(3) On satisfactory completion of all the RAM test, the LCD will display: "DRAM OK!!".

(4) If any DRAM has an error, the LCD will display:

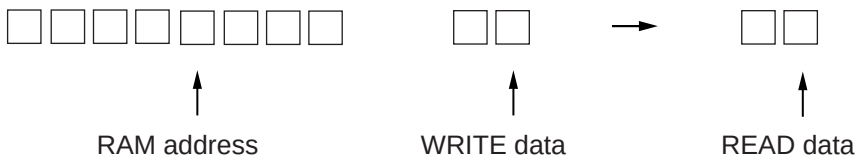

The following table is the reference.

Table 6.1 Video Controller DRAM Address Corresponding Table

Address		Part replacement	
	Lower order address		
$08000000 -$081FFFFF	0, 4, 8, C 1, 5, 9, D 2, 6, A, E 3, 7, B, F	#32 #30 #27 #22	*1
$08200000 -$099FFFFF		Replace with SIMM corresponding to memory map.	*2

*1: Replace the DRAM on the Main PCB.

*2: Replace the SIMM.

Note1: There may be the case that the above sequence doesn’t work correctly according to the contents of RAM failure, or in faulty assembly such as soldering bride or ineffective soldering etc.

Note2: ”PRINT CHECK” may be displayed when getting out from TEST mode. It will disappear in 20 or 30 seconds, displaying ”READY” on LCD. It is not a trouble.

7. STATUS MESSAGE LIST

Table 6.2 Operator Call Messages

Operator Call Message	Meaning	Action
CHECK XX TRAY	The paper cassette (XX is MP/T1/T2) is out of paper.	Load a stack of paper into the cassette. See M-7.
12 COVER OPEN	The upper cover of the printer is open.	Close the cover. See M-6.
13 JAM XXXXXX	Paper is jammed in the printer. XXXXXX is TRAYS/INSIDE/REAR/ DUPLEX.	Remove the jammed paper from the indicated area. See M-10.
14 NO CARTRIDGE	The toner cartridge is not installed in the printer.	Install a toner cartridge. See M-8.
XX NO CASSETTE	The paper cassette is not installed. XX is T1/T2.	Install the paper cassette.
16 TONER EMPTY	The printer has almost run out of toner: you may print another 30 to 100 pages. (The ALARM lamp lights at the same time.)	Remove the toner cartridge, rock it several times at 45°, and install it again. Or replace the toner cartridge with a new one. See M-9.
XX LOAD PAPER ***** SIZE	The wrong size of paper was loaded in the paper cassette XX. XX is MP/ T1/T2. (The message appears alternately to show a particular size.)	Load the requested size of paper in the paper cassette, or load it on the manual feed tray and press the FORM FEED switch.
18 MANUAL FEED ***** SIZE	The printer requests you to load paper manually. (The message appears alternately to show a particular size.)	Load the requested size of paper on the multi-purpose tray and press the SEL switch.
19 CHECK FONT	An error occurred in the optional font cartridge/ card.	Turn off the printer, and reinstall or replace the optional font cartridge/card.
20 FONT REMOVAL	The font cartridge/card was removed while the printer is on-line.	Turn off the printer, install the font cartridge/ card, and turn on the printer. The CONTINUE switch will allow you to temporarily ignore this message.
27 NO DX UNIT	The duplex unit is not installed with the printer when the duplex printing mode is selected.	Install the duplex unit correctly.See the DX-1200 user's guide.
27 NO DX TRAY	The duplex paper guide tray is not installed in T1 when the duplex printing mode is selected.	Install the duplex paper guide tray into T1. See the DX-1200 user's guide.
27 DX OPEN	The cover of the duplex unit is open.	Close the cover. See the DX-1200 user's guide.

Table 6.3 Error Messages

Error Message	Meaning	Action
31 PRINT OVERRUN	Print overrun	Press the CONTINUE switch to start printing the next page. Data which overran the print area on the page cannot be printed. Check your page protection setting with the MODE switch. Setting page protection to the correct size could solve this problem. If printing at 600 dpi, you may need to add optional SIMM memory.
32 BUFFER ERROR	Input buffer overflow	Press the CONTINUE switch to resume printing. Data lost in overflow cannot be printed.
34 MEMORY FULL	Work memory overflow	Press the CONTINUE switch to resume printing. If the same error should occur after you press the CONTINUE switch, turn off the printer. Wait a few seconds, then turn it on again . Reduce the input buffer size. Turn off ”KEEP PCL.” Add SIMM memory with power off. Download font and the font saved in the HDD card might cause the error, for it occupies the same work area as the RAM. Memory expansion is recommended in that case.
40 LINE ERROR	Error in the communications circuit	When the serial interface is used, check the communications parameters such as baud rate, code type, parity, and handshake protocols. When the parallel interface is used, check the interface cable connection.
41 PRINT CHECK	Error in communication with the engine controller	Turn off the printer. Wait a few seconds, then turn it on again. See M-17.

Error Message	Meaning	Action
42 CARD FULL	Card overflow	Delete unnecessary macros or fonts, or use a new card.
43 CARD W ERR	Card write error	Set the write protect switch of the card to OFF if it has been set to ON. Use a new card. If the same error occurs, consult your dealer or service personal.
44 SIMM ERROR	Incorrect installation of SIMMs	Install SIMMs correctly, referring to the printed error message.
45 MIO ERROR	Error in communication with the MIO card.	Install the MIO card correctly.
46 OPT IO ERROR	Connection error with optional feeders and duplex unit.	Check the interface cable connection between the printer and the fitted option.
47 CARD R ERROR	Card read error	Use a new card, If the same error occurs, consult your dealer or service personal.
48 XX SIZE ERROR	Paper of incorrect size is loaded into XX. XX is T2/DX.	Set the correct size of paper in T2 or for duplex printing.
IGNORE DATA (BR- Script 2 mode only)	Data is ignored because of an error in the Post Script program.	Press the RESET switch.

Table 6.4 Service Call Messages

Service Call Message	Meaning	Action
50 FUSER MALF	Malfunction of fuser	Turn off the printer. Wait 15 minutes, then turn it on again. See M-14.
51 LASER BD MALF	Malfunction of laser beam detector	Turn off the printer. Wait a few seconds, then turn it on again. See M-15.
52 SCANNER MALF	Malfunction of laser scanner motor	Turn off the printer. Wait a few seconds, then turn it on again. See M-16.
53 DX FAN MALF	Malfunction of fan motor in the duplex unit.	Turn off the printer. Wait a few seconds, then turn it on again.
54 MOTOR MALF	Malfunction of main motor	Turn off the printer. Wait a few seconds, then turn it on again. See M-11.
55 HIGH VOL MALF	Malfunction of high-voltage power supply	Turn off the printer. Wait a few seconds, then turn it on again. See M-13.
61 PROG ERROR	Program ROM checksum error	Turn off the printer. Wait a few seconds, then turn it on again.
62 FONT ERROR	Font ROM checksum error	Turn off the printer. Wait a few seconds, then turn it on again.
63 D-RAM ERROR	D-RAM error	Turn off the printer. Wait a few seconds, then turn it on again.
66 NV-W ERROR	NV-RAM error	Turn off the printer. Wait a few seconds, then turn it on again.
67 NV-R ERROR	NV-RAM error	Turn off the printer. Wait a few seconds, then turn it on again.
68 NV-B ERROR	NV-RAM error	Turn off the printer. Wait a few seconds, then turn it on again.
60 SYSTEM ERROR XXXXX	Error in XXXXX.	Turn off the printer. Wait a few seconds, then turn it on again.

Appendix 1. Engine Block Diagram

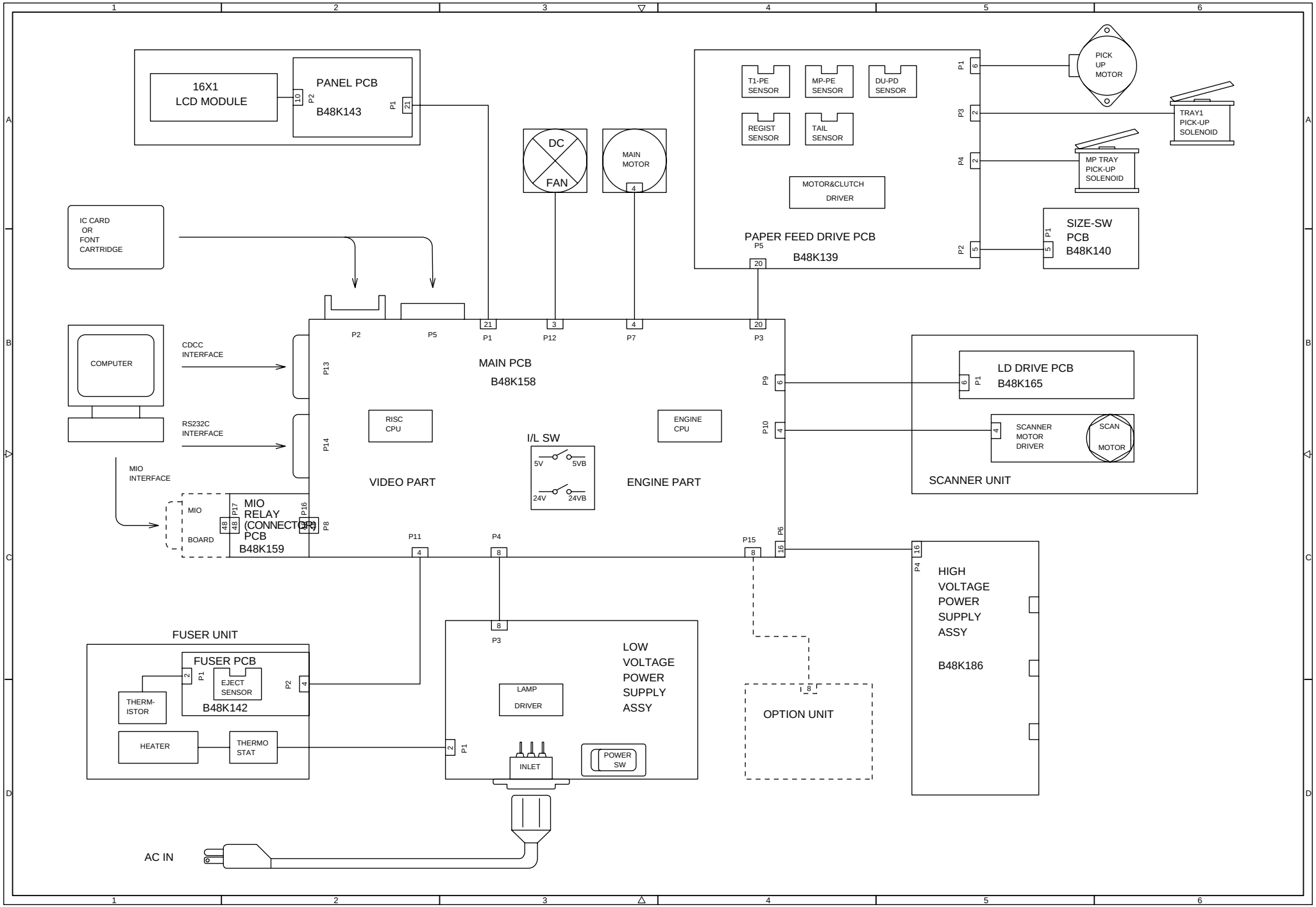

Appendix 2. Paper Feed/Size-SW PCB Circuitry Diagram (1/1)

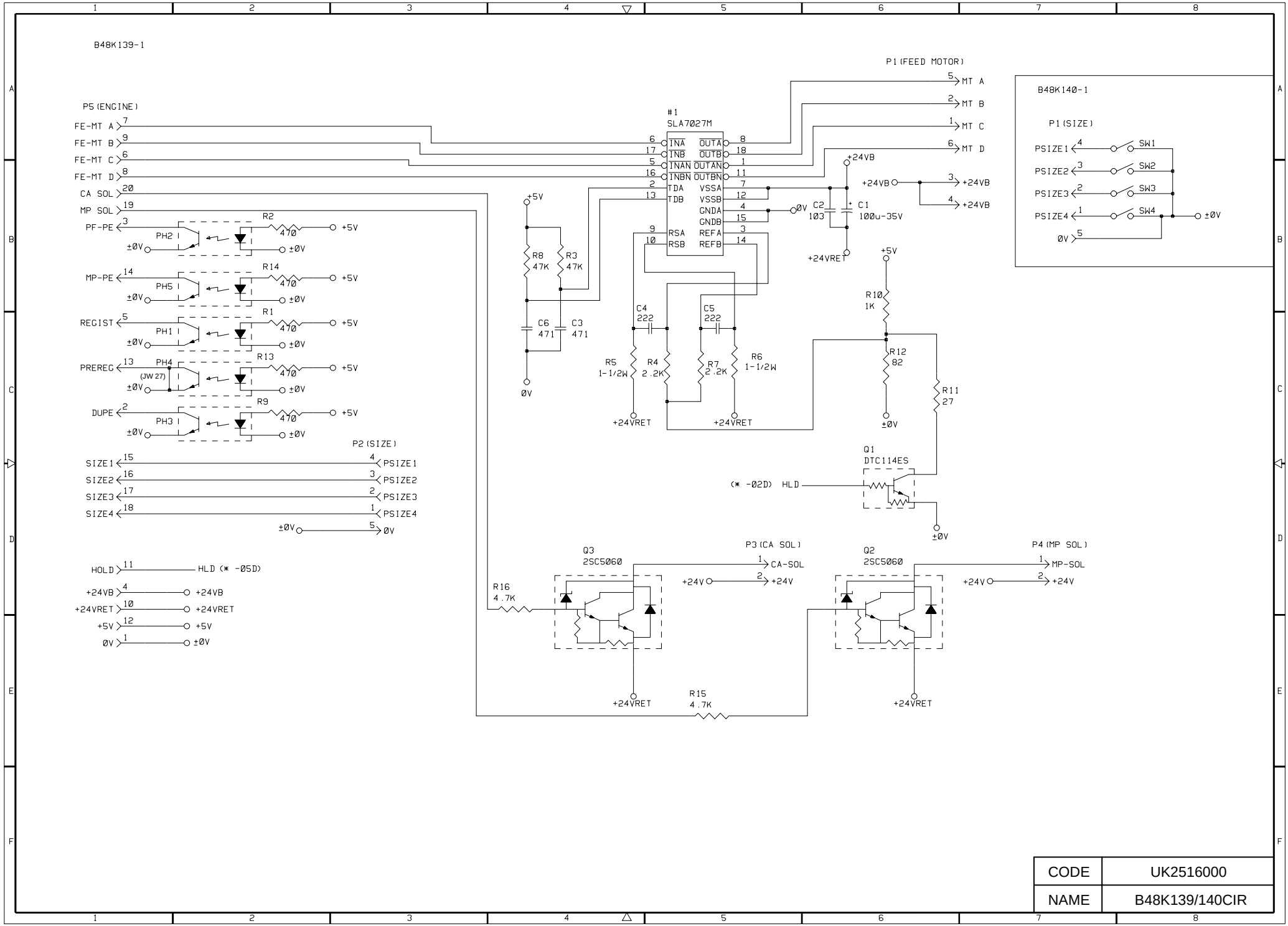

CODE	UK2516000
NAME	B48K139/140CIR

Appendix 3. Main PCB Circuitry Diagram (1/8)

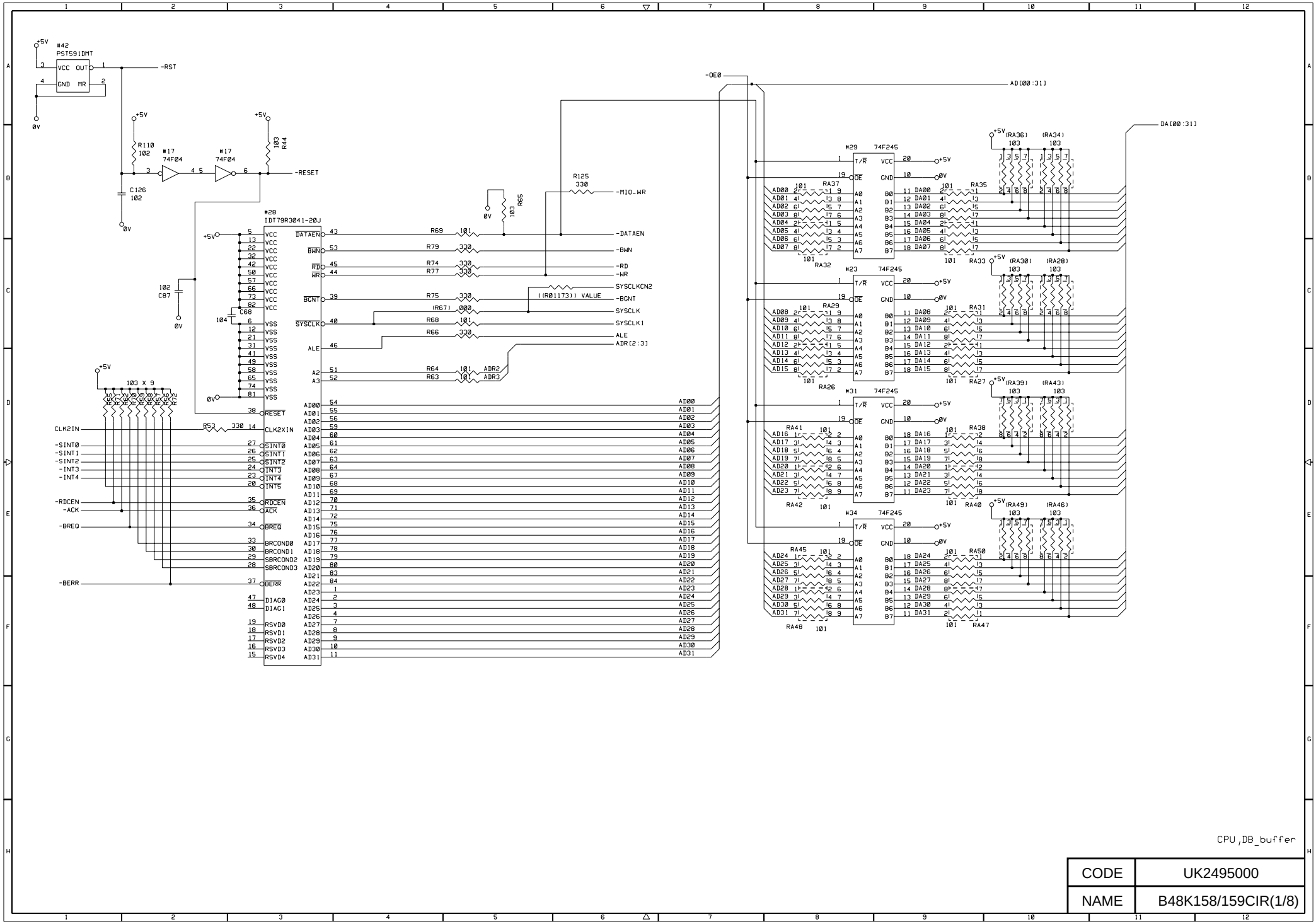

CODE	UK2495000
NAME	B48K158/159CIR(1/8)

Appendix 4. Main PCB Circuitry Diagram (2/8)

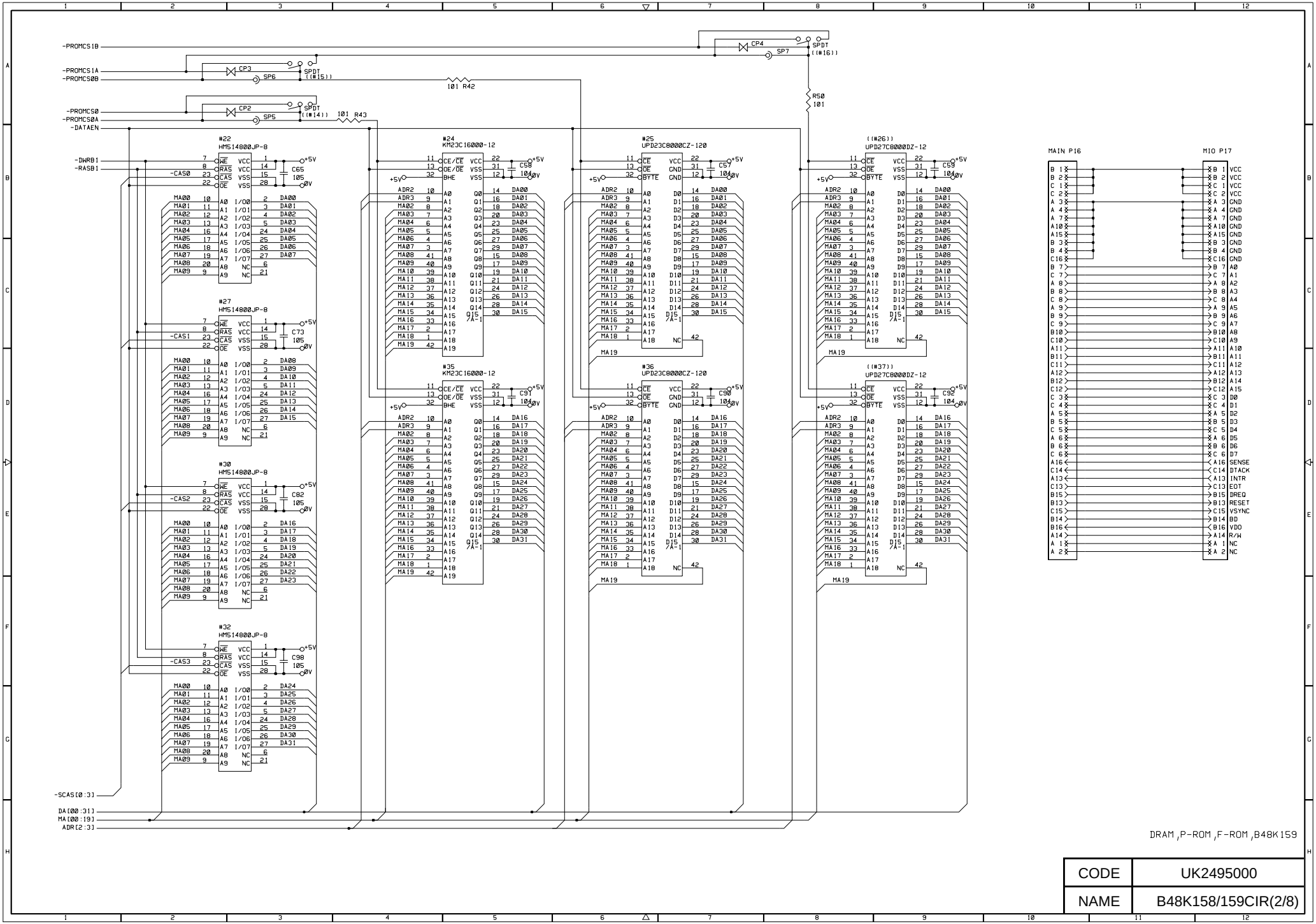

CODE	UK2495000
NAME	B48K158/159CIR(2/8)

Appendix 5. Main PCB Circuitry Diagram (3/8)

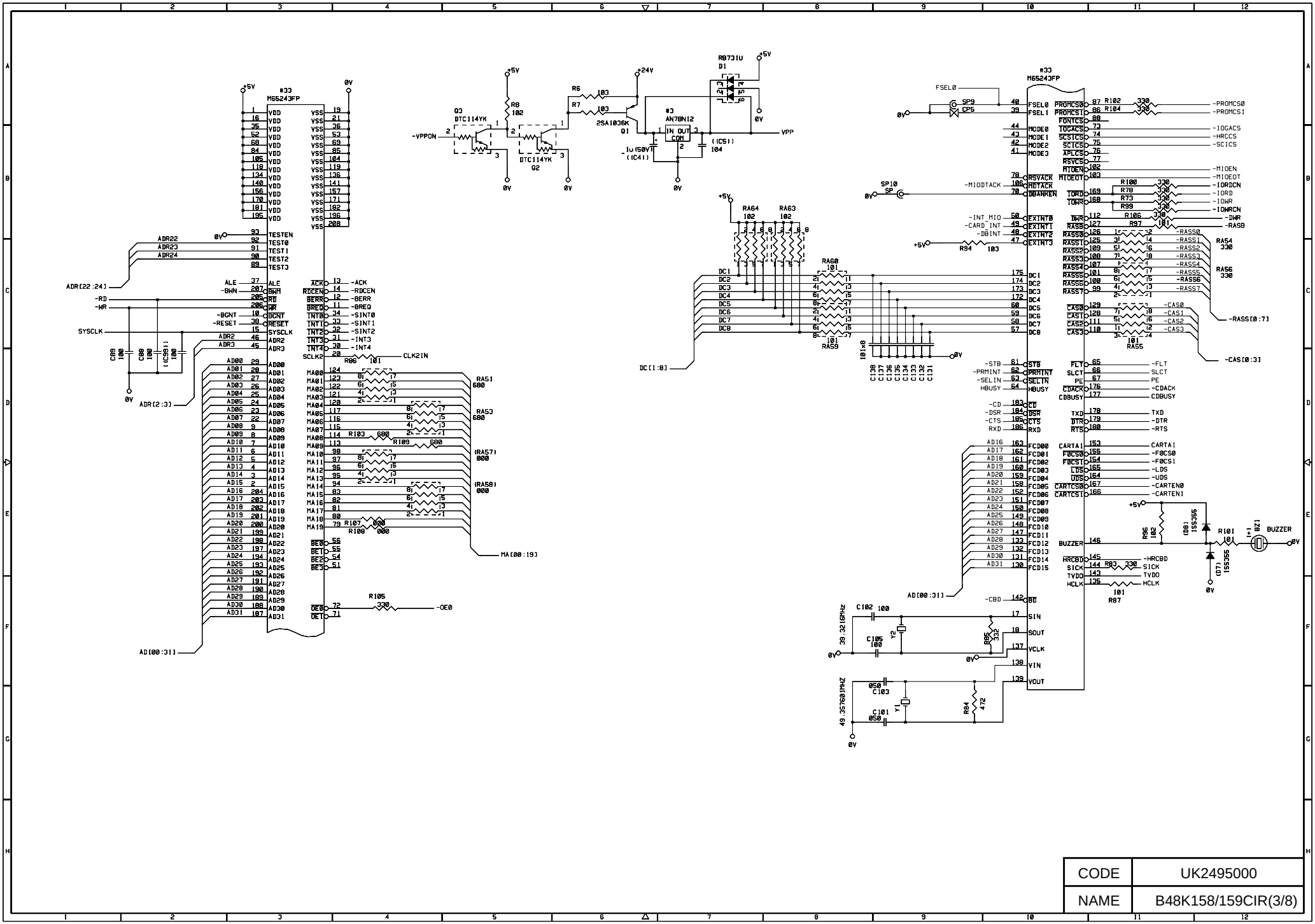

CODE	UK2495000
NAME	B48K158/159CIR(3/8)

Appendix 6. Main PCB Circuitry Diagram (4/8)

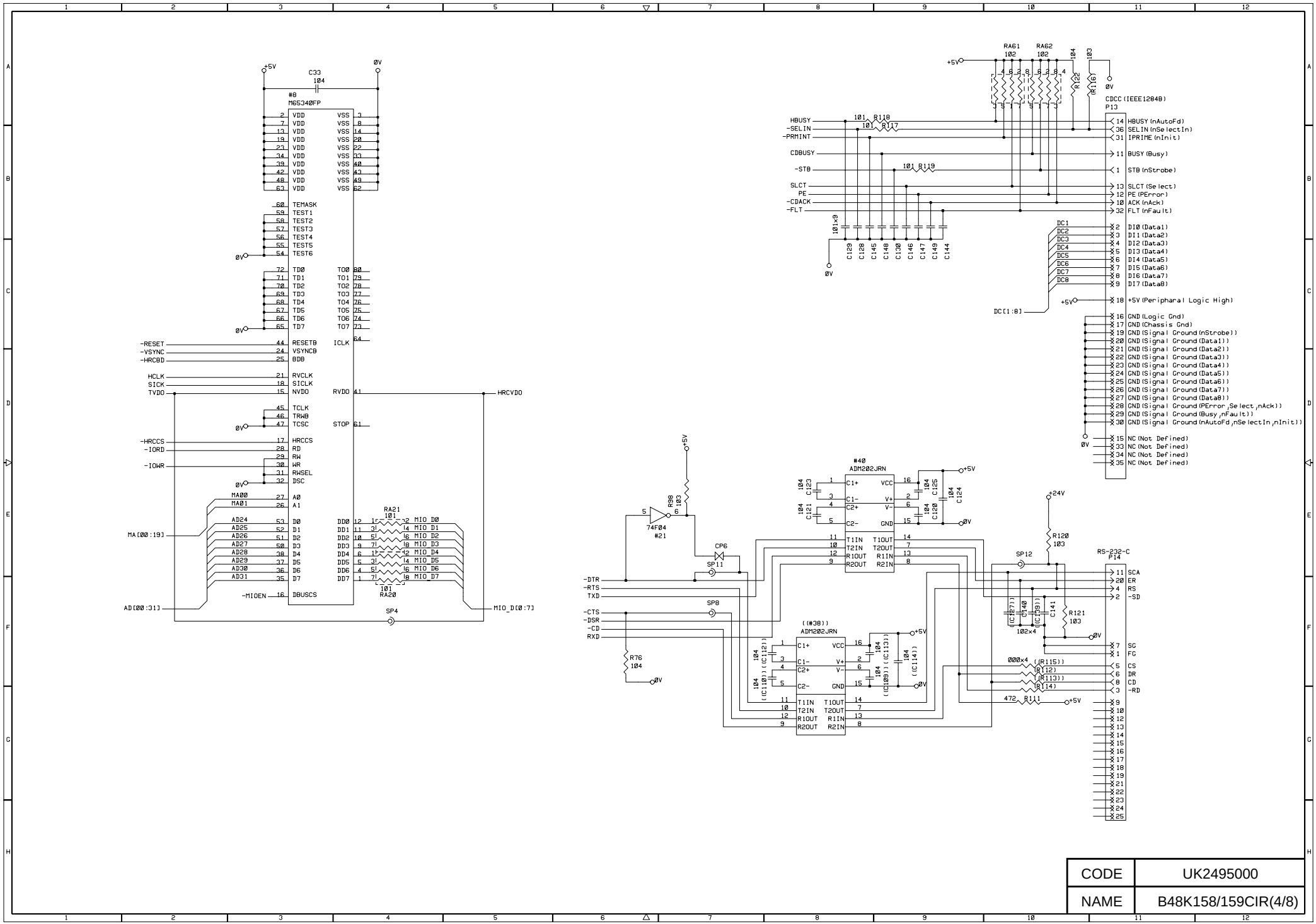

CODE	UK2495000
NAME	B48K158/159CIR(4/8)

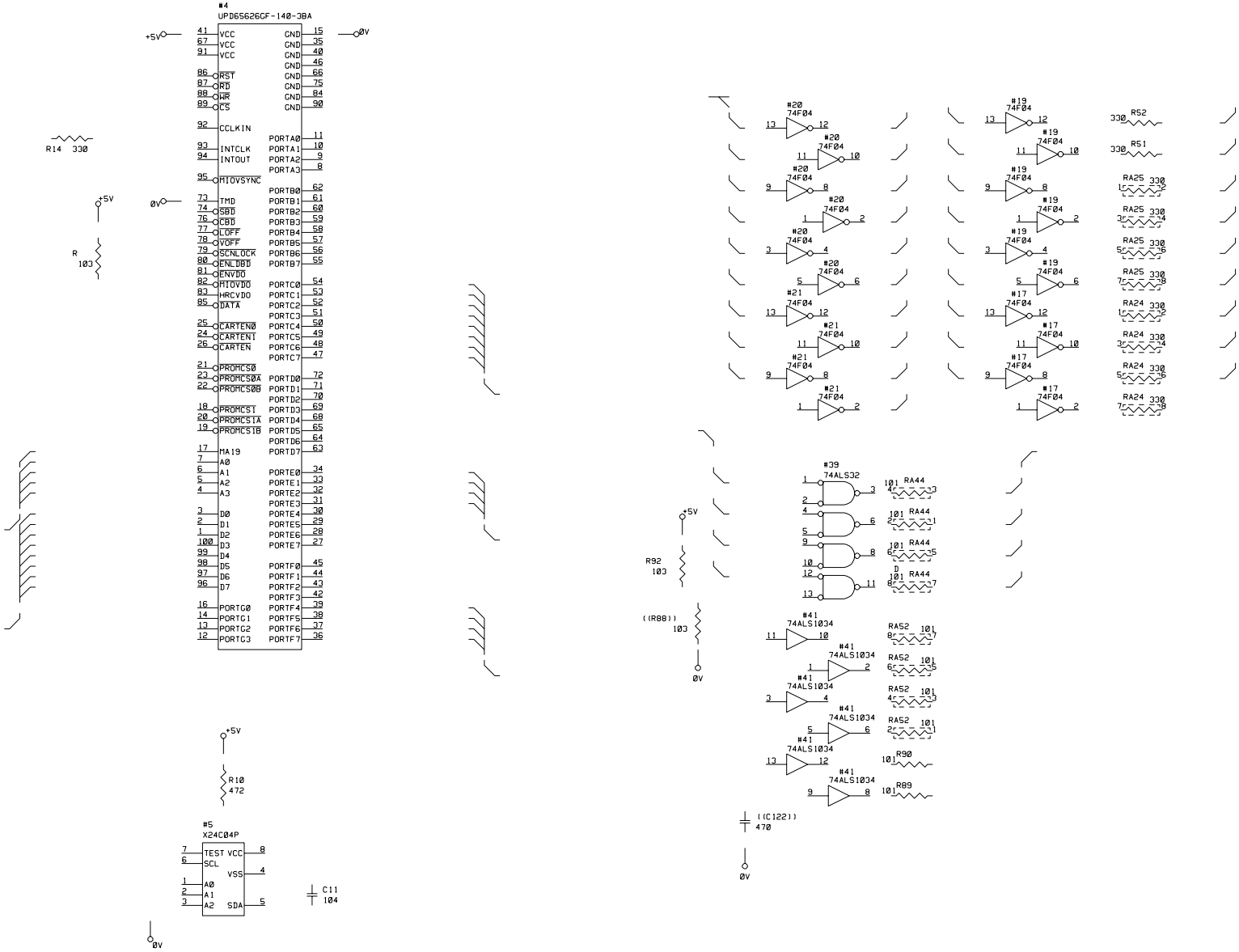
#4
UPD65626GF-140-3BA
+5V
0V
VCC
GND
RST
RD
WR
CS
CCLKIN
INTCLK
INTOUT
MIOVSYNC
TMD
SBD
CBD
LOFF
VOFF
SCNLOCK
ENLDBD
ENVDD
MIOVDD
HRCVDD
DATA
CARTEN0
CARTEN1
CARTEN
PROMCS0
PROMCS0A
PROMCS0B
PROMCS1
PROMCS1A
PROMCS1B
MA19
A0
A1
A2
A3
D0
D1
D2
D3
D4
D5
D6
D7
PORTG0
PORTG1
PORTG2
PORTG3
PORTA0
PORTA1
PORTA2
PORTA3
PORTB0
PORTB1
PORTB2
PORTB3
PORTB4
PORTB5
PORTB6
PORTB7
PORTC0
PORTC1
PORTC2
PORTC3
PORTC4
PORTC5
PORTC6
PORTC7
PORTD0
PORTD1
PORTD2
PORTD3
PORTD4
PORTD5
PORTD6
PORTD7
PORTE0
PORTE1
PORTE2
PORTE3
PORTE4
PORTE5
PORTE6
PORTE7
PORTF0
PORTF1
PORTF2
PORTF3
PORTF4
PORTF5
PORTF6
PORTF7
R14 330
R
10K
#5
X24C04P
TEST
SCL
A0
A1
A2
VCC
VSS
SDA
R10
472
C11
104
#20
74F04
#19
74F04
#17
74F04
#21
74F04
R52
330
R51
330
RA25
330
RA24
330
#39
74ALS32
RA44
10K
R92
10K
((R88))
10K
#41
74ALS1034
RA52
10K
R90
10K
R89
10K
((C122))
470

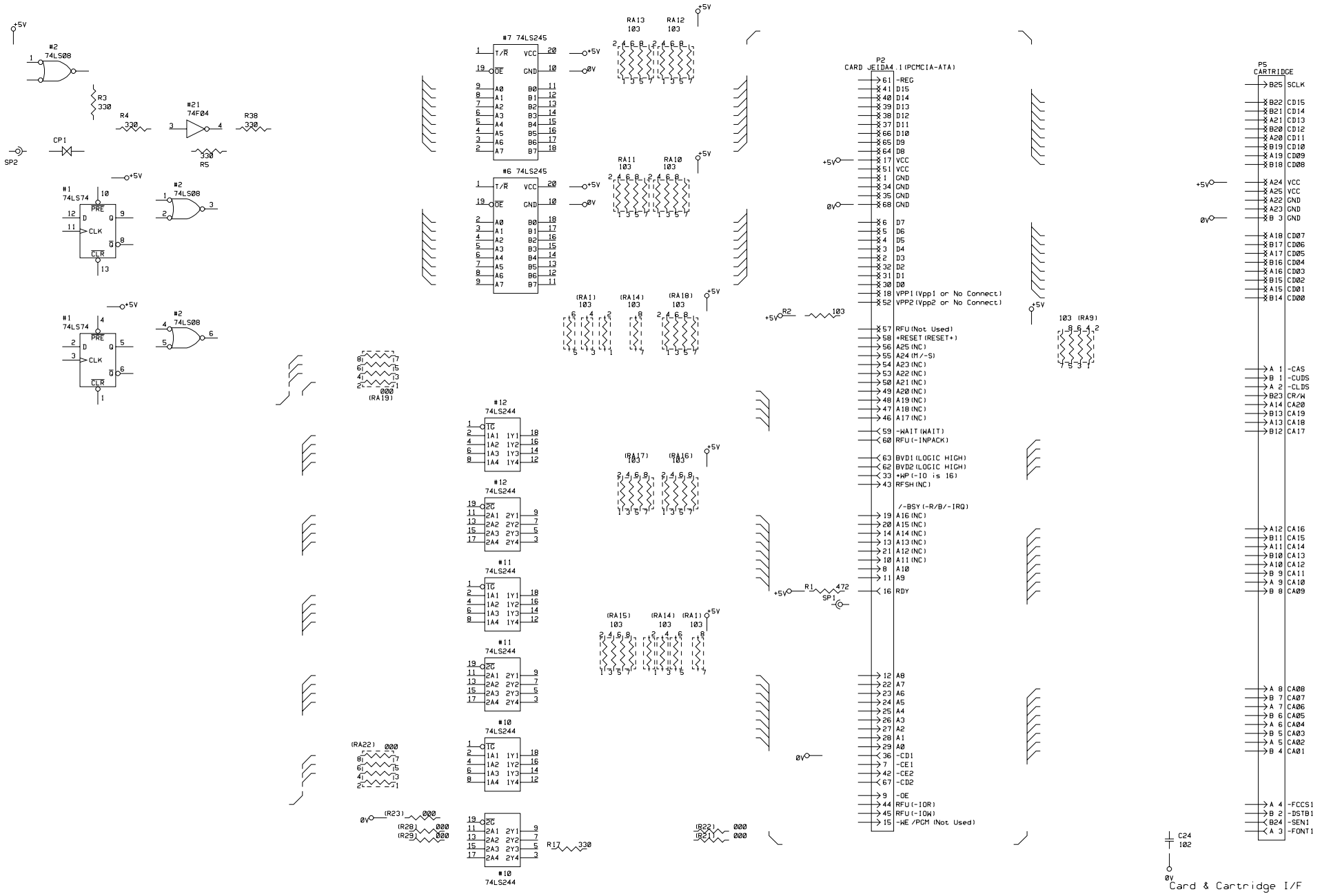
#2 74LS08
R3 330
R4 330
#21 74F04
R38 330
R5 330
CP1
SP2
#1 74LS74
#7 74LS245
#6 74LS245
RA13 103
RA12 103
RA11 103
RA10 103
(RA1) 103
(RA14) 103
(RA18) 103
(RA9) 103
(RA19) 000
#12 74LS244
#11 74LS244
#10 74LS244
(RA17) 103
(RA16) 103
(RA15) 103
(RA22) 000
(R23) 000
(R28) 000
(R29) 000
R17 330
(R22) 000
(R21) 000
R2 103
R1 472
SP1
P2
CARD JEIDA4.1(PCMCIA-ATA)
61 -REG
41 D15
40 D14
39 D13
38 D12
37 D11
66 D10
65 D9
64 D8
17 VCC
51 VCC
1 GND
34 GND
35 GND
68 GND
6 D7
5 D6
4 D5
3 D4
2 D3
32 D2
31 D1
30 D0
18 VPP1(Vpp1 or No Connect)
52 VPP2(Vpp2 or No Connect)
57 RFU(Not Used)
58 +RESET(RESET+)
56 A25(NC)
55 A24(M/-S)
54 A23(NC)
53 A22(NC)
50 A21(NC)
49 A20(NC)
48 A19(NC)
47 A18(NC)
46 A17(NC)
59 -WAIT(WAIT)
60 RFU(-INPACK)
63 BVD1(LOGIC HIGH)
62 BVD2(LOGIC HIGH)
33 *WP(-IO is 16)
43 RFSH(NC)
/-BSY(-R/B/-IRQ)
19 A16(NC)
20 A15(NC)
14 A14(NC)
13 A13(NC)
21 A12(NC)
10 A11(NC)
8 A10
11 A9
16 RDY
12 A8
22 A7
23 A6
24 A5
25 A4
26 A3
27 A2
28 A1
29 A0
36 -CD1
7 -CE1
42 -CE2
67 -CD2
9 -OE
44 RFU(-IOR)
45 RFU(-IOW)
15 -WE /PCM (Not Used)
P5
CARTRIDGE
B25 SCLK
B22 CD15
B21 CD14
A21 CD13
B20 CD12
A20 CD11
B19 CD10
A19 CD09
B18 CD08
A24 VCC
A25 VCC
A22 GND
A23 GND
B 3 GND
A18 CD07
B17 CD06
A17 CD05
B16 CD04
A16 CD03
B15 CD02
A15 CD01
B14 CD00
A 1 -CAS
B 1 -CUDS
A 2 -CLDS
B23 CR/W
A14 CA20
B13 CA19
A13 CA18
B12 CA17
A12 CA16
B11 CA15
A11 CA14
B10 CA13
A10 CA12
B 9 CA11
A 9 CA10
B 8 CA09
A 8 CA08
B 7 CA07
A 7 CA06
B 6 CA05
A 6 CA04
B 5 CA03
A 5 CA02
B 4 CA01
A 4 -FCCS1
B 2 -DSTB1
B24 -SEN1
A 3 -FONT1
C24 102
Card & Cartridge I/F

brother®

LASER PRINTER
SERVICE MANUAL

MODEL:HL-1260e/1660

No part this publication may be reproduced in any form or by any means without permission in writing from the publisher.

Trademarks:

- BR-Script, DX-1200 and DX-1600 are registered trademarks of Brother Industries, Ltd.
- Centronics is a registered trademark of Genicom Corporation.
- PostScript is a registered trademark of Adobe Systems Incorporated.
- IBM Proprinter XL is a registered trademark of International Business Machines Corporation.
- EPSON FX-850 is a registered trademark of Seiko Epson Corporation.
- HP-GL and HP Laser Jet 4 are registered trademarks of Hewlett Packard Company.
- Windows 3.1 is a registered trademark of Microsoft Corporation in the U.S. and other countries.

PREFACE

This service manual contains basic information required for after-sales service of the laser printer (hereinafter referred to as ”this machine” or ” the printer”). This information is vital to the service technician in maintaining the high printing quality and performance of the printer.

This manual consists of the following chapters:

Chapter I : General

Features, specifications, etc.

Chapter II : Theory of Operation

Basic operation of the mechanical system and the electrical system, and their timing.

Chapter III : Electrical System

Theory of the electronics circuit

Chapter IV : Mechanical System

Requirements for a suitable location, disassembling and reassembling procedure of mechanical system.

Chapter V : Maintenance and Servicing

Parts replacement schedule, list of tools, lubricants and cleaners.

Chapter VI : Troubleshooting

Reference values and adjustment, troubleshooting for image defects, troubleshooting for malfunctions, etc.

Appendices : Engine Block Diagram, PCB Circuitry Diagrams, etc.

Note: This service manual of the printer (HL-1260e/HL-1660) describes only different parts from the each part of the service manual (No.54T039NE0) which was published before. We omit the same parts with that of HL-1260 and describe the effect of it in contents. When you find the omitted parts, please refer to the service manual of that model.

Information in this manual is subject to change due to improvement or re-design of the product. All relevant information in such cases will be supplied in service information bulletins (Technical Information).

A thorough understanding of this printer, based on information in this service manual and service information bulletins, is required for maintaining its quality performance and for fostering the practical ability to find the cause of troubles.

CONTENTS

CHAPTER I GENERAL

1. FEATURES ..... Refer to HL-1260 (P.I-1)
2. SPECIFICATIONS I-1
3. SAFETY INFORMATION I-6
   - 3.1 Laser Safety (110 - 120V Model only) I-6
   - 3.2 CDRH Regulations (110 - 120V Model only) I-6
   - 3.3 Additional Information I-7
4. PARTS OF THE PRINTER ..... Refer to HL-1260 (P.I-8)
   - 4.1 External Views ..... Refer to HL-1260 (P.I-8)
   - 4.2 Cross Sectional View ..... Refer to HL-1260 (P.I-9)
5. STORAGE AND HANDLING OF EP-ED CARTRIDGES ..... Refer to HL-1260 (P.I-10)
   - 5.1 Storage of Sealed EP-ED Cartridges ..... Refer to HL-1260 (P.I-10)
   - 5.2 Storage of Unsealed EP-ED Cartridges ..... Refer to HL-1260 (P.I-10)

CHAPTER II THEORY OF OPERATION

1. BASIC OPERATIONS II-1
   - 1.1 Mechanical Configuration ..... Refer to HL-1260 (P.II-1)
   - 1.2 Main Drive ..... Refer to HL-1260 (P.II-2)
   - 1.3 Basic Sequence of Operations II-1
2. LASER/SCANNER SYSTEM ..... Refer to HL-1260 (P.II-4)
3. IMAGE FORMATION SYSTEM ..... Refer to HL-1260 (P.II-5)
   - 3.1 Outline ..... Refer to HL-1260 (P.II-5)
   - 3.2 Printing Process ..... Refer to HL-1260 (P.II-5)
     - 3.2.1 Electrostatic latent image formation stage ..... Refer to HL-1260 (P.II-6)
     - 3.2.2 Developing stage ..... Refer to HL-1260 (P.II-8)
     - 3.2.3 Transfer stage ..... Refer to HL-1260 (P.II-9)
     - 3.2.4 Fixing stage ..... Refer to HL-1260 (P.II-10)
     - 3.2.5 Drum cleaning stage ..... Refer to HL-1260 (P.II-10)
   - 3.3 Operation ..... Refer to HL-1260 (P.II-11)
4. PAPER PICK-UP/FEED SYSTEM II-2
   - 4.1 Outline ..... Refer to HL-1260 (P.II-12)
   - 4.2 Cassette Feed II-2
   - 4.3 MP Tray Feed II-3
   - 4.4 Paper Jam Detection II-4

CHAPTER III ELECTRICAL SYSTEM

1. MAIN PCB III-1
   1.1 Outline III-1
   1.2 Video Controller Circuit III-2
   1.3 Engine Controller Circuit III-6
2. PAPER FEED DRIVE CIRCUIT ..... Refer to HL-1260 (P.III-9)
3. DISPLAY CIRCUIT ..... Refer to HL-1260 (P.III-11)
   3.1 Outline ..... Refer to HL-1260 (P.III-11)
   3.2 Operation ..... Refer to HL-1260 (P.III-11)
4. LOW-VOLTAGE POWER SUPPLY ASSY ..... Refer to HL-1260 (P.III-12)
   4.1 Outline ..... Refer to HL-1260 (P.III-12)
   4.2 Protection Functions ..... Refer to HL-1260 (P.III-12)
5. HIGH-VOLTAGE POWER SUPPLY ASSY ..... Refer to HL-1260 (P.III-14)
   5.1 Outline ..... Refer to HL-1260 (P.III-14)
   5.2 Operation of the Components of the High-Voltage Power Supply Assy ..... Refer to HL-1260 (P.III-14)

CHAPTER IV MECHANICAL SYSTEM

PRINTER DISASSEMBLING PROCEDURE ..... Refer to HL-1260 (P.IV-2)
   1.1 Configuration ..... Refer to HL-1260 (P.IV-3)
   1.2 Toner Cartridge Lid IV-2
   1.3 Side Cover L ..... Refer to HL-1260 (P.IV-3)
   1.4 Font Cover Assy ..... Refer to HL-1260 (P.IV-4)
   1.5 Upper Cover Assy, Rear Cover Assy ..... Refer to HL-1260 (P.IV-4)
      1.5.1 Upper cover assy, rear cover assy ..... Refer to HL-1260 (P.IV-4)
      1.5.2 Changeover guide, jam remove cover ..... Refer to HL-1260 (P.IV-5)
   1.6 Side Cover R ..... Refer to HL-1260 (P.IV-5)
   1.7 DC Fan Motor IV-2
   1.8 Main PCB IV-3
   1.9 Control Panel Unit ..... Refer to HL-1260 (P.IV-8)
   1.10 Scanner Unit IV-5
   1.11 Cartridge Stopper Assy IV-5
   1.12 Paper Feed Chassis Unit ..... Refer to HL-1260 (P.IV-10)
   1.13 Separation Pad Assy ..... Refer to HL-1260 (P.IV-11)
   1.14 MP PE Sub Actuator ..... Refer to HL-1260 (P.IV-12)
   1.15 P Feed /Size-SW PCB Assy ..... Refer to HL-1260 (P.IV-12)
   1.16 Size-Switch Spring ..... Refer to HL-1260 (P.IV-12)
   1.17 Regist Sensor Actuator ..... Refer to HL-1260 (P.IV-13)
   1.18 MP Paper Detection Actuator ..... Refer to HL-1260 (P.IV-13)
   1.19 PE Sensor Actuator MP ..... Refer to HL-1260 (P.IV-13)
   1.20 Tray Sensor Holder ..... Refer to HL-1260 (P.IV-14)
   1.21 Roller Holder ..... Refer to HL-1260 (P.IV-14)
   1.22 Paper Pick-up Roller Assy, Bearing ..... Refer to HL-1260 (P.IV-15)
   1.23 Paper Pick-up Solenoid ..... Refer to HL-1260 (P.IV-16)
   1.24 Paper Feed Motor Assy ..... Refer to HL-1260 (P.IV-16)
   1.25 MP Tray Cover ..... Refer to HL-1260 (P.IV-17)
   1.26 MP Tray Assy ..... Refer to HL-1260 (P.IV-17)
   1.27 Paper Path Separation Plate, Paper Path Separation Film Refer to HL-1260 (P.IV-18)
   1.28 Latch ..... Refer to HL-1260 (P.IV-19)
   1.29 Fixing Unit (for both 120V and 230V, the only difference is the halogen heater) ..... Refer to HL-1260 (P.IV-19)
   1.30 Transfer Unit ..... Refer to HL-1260 (P.IV-22)

1.31 DC Gear Holder Assy IV-6
1.31.1 Scanner Fan Motor IV-6
1.32 PS Switch Wire, Remote Switch ..... Refer to HL-1260 (P.IV-23)
1.33 High-Voltage Power Supply PCB Assy ..... Refer to HL-1260 (P.IV-24)
1.34 Low-Voltage Power Supply PCB Assy ..... Refer to HL-1260 (P.IV-24)
1.35 Toner Cartridge (EP-ED Cartridge) ..... Refer to HL-1260 (P.IV-25)
1.36 Paper Tray IV-7

CHAPTER V MAINTENANCE AND SERVICING

1. PERIODICAL REPLACEMENT PARTS ..... Refer to HL-1260 (P.V-1)
2. CONSUMABLE PARTS STANDARD ENDURANCE TABLE V-1
3. LIST OF STANDARD TOOLS ..... Refer to HL-1260 (P.V-2)
4. LIST OF LUBRICANTS AND CLEANERS ..... Refer to HL-1260 (P.V-3)

CHAPTER VI TROUBLESHOOTING

1. INTRODUCTION ..... Refer to HL-1260 (P.VI-1)
1.1 Initial Check ..... Refer to HL-1260 (P.VI-1)
1.2 Basic Procedure ..... Refer to HL-1260 (P.VI-2)
2. TEST PRINTING AND MECHANICAL CHECK ..... Refer to HL-1260 (P.VI-2)
2.1 Test Printing ..... Refer to HL-1260 (P.VI-2)
3. IMAGE DEFECTS ..... Refer to HL-1260 (P.VI-3)
3.1 Image Defect Examples ..... Refer to HL-1260 (P.VI-3)
3.2 Troubleshooting Image Defects ..... Refer to HL-1260 (P.VI-4)
4. TROUBLESHOOTING OF MALFUNCTIONS VI-1
5. TROUBLESHOOTING PAPER TRANSPORT PROBLEMS ..... Refer to HL-1260 (P.VI-19)
5.1 Paper Jams ..... Refer to HL-1260 (P.VI-19)
5.2 Incomplete Paper Feed ..... Refer to HL-1260 (P.VI-22)
6. OPERATION ..... Refer to HL-1260 (P.VI-23)
6.1 Line Inspection Mode Procedure ..... Refer to HL-1260 (P.VI-23)
6.2 DRAM Test ..... Refer to HL-1260 (P.VI-25)
7. STATUS MESSAGE LIST VI-9

APPENDICES

1. Engine Block Diagram A-1
2. Paper Feed/Size-SW PCB Circuitry Diagram (1/1) ..... Refer to HL-1260 (P.A-2)
3. Main PCB Circuitry Diagram (1/7) A-2
4. Main PCB Circuitry Diagram (2/7) A-3
5. Main PCB Circuitry Diagram (3/7) A-4
6. Main PCB Circuitry Diagram (4/7) A-5
7. Main PCB Circuitry Diagram (5/7) A-6
8. Main PCB Circuitry Diagram (6/7) A-7
9. Main PCB Circuitry Diagram (7/7) A-8
10. Control Panel PCB Circuitry Diagram (1/1) ..... Refer to HL-1260 (P.A-11)
11. Scanner LD PCB Circuitry Diagram (1/1) A-9

CHAPTER I GENERAL

2. SPECIFICATIONS

(1)	Type	Desktop page printer
(2)	Printing method	Electrophotography (single-component dry toner)
(3)	Printing speed	
	Cassette feed	16 pages/minute (A4 size by cassette feed) 17 pages/minute (Letter size by cassette feed) 13.6 pages/minute (Legal size by cassete feed)
(4)	First print time	Approx. 20 seconds (A4 size by face-down print delivery from the paper cassette)
(5)	Warm-up (WAIT) time	Max. 1 minute at 20°C (68°F)
(6)	Optical system	
	Laser	Semiconductor laser Output power : 5mW max. Wave length : 780 nm
	Scanning system	Rotating six-faced polygon mirror
(7)	Resolution	
	Horizontal	600 dots/inch,1200 dots/inch and high resolution control (HRC)
	Vertical	600 raster lines/inch
(8)	Printing system	
	Photosensitive drum	OPC
	Charging	Charging Roller
	Exposure	Laser scanning system
	Development	Toner projection development system
	Paper feed	Cassette or manual feed
	Image transfer	Roller method
	Separation	Natural(utilizing a small drum radius), Static charge eliminator
	Fixing	Heated fixing roller
	Toner supply	Included in the replaceable EP-ED cartridge
	Life expectancy	6000 pages/cartridge
(9)	Paper	
	Cassette feed	Plain paper for Letter, Legal, A4, ISO B5, A5, ISO B6, A6, Executive (A4 or letter size paper with the print density set at level 8 with 4% coverage, recommended: 60 g/m^2 — 105 g/m^2) and Envelope (com10, monarch, C5, DL, ISO B5)
	Multi-purpose Tray	Plain paper of 90 x 148 mm — 216 x 356 mm (recommended: 60g/m^2 — 135 g/m^2, overhead projector (OHP) film, postcards, label stock and envelopes (specified sizes)

(10) Cassette (Tray 1)

Universal cassette	A4, Letter, Legal, ISO B5, Executive, A5, ISO B6, and A6
Maximum load height	55 mm (500 sheets of 80 g/m^2 paper)
Feedable paper type	60 — 105 g/m^2
Envelopes	40 envelopes

(11) Print delivery Face-down or (face-up)

(12) Print delivery tray capacity

Face-down	250 sheets (80 g/m^2)
Face-up	Discharge only

(13) Effective printing area

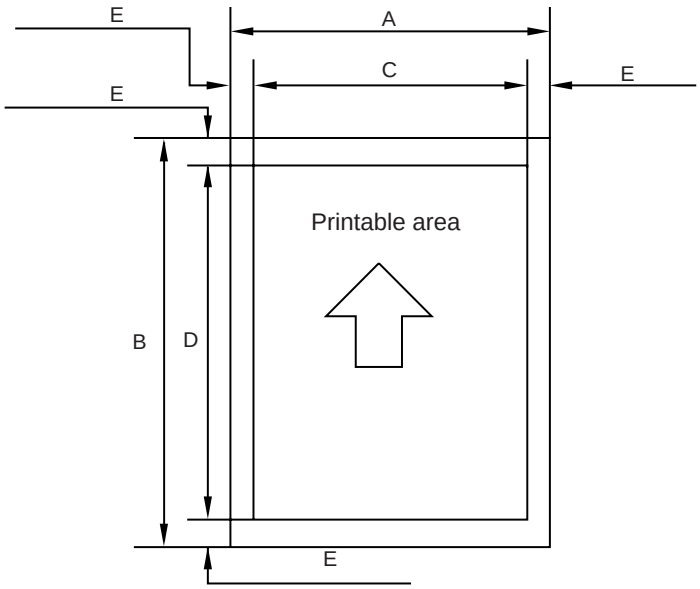

Figure 1.1 Printable Area

Effective printable area is referred to as a area within which is guaranteed the printing of all interface signal data on a hard copy without any omission.

The tables below shows the effective printable area for each paper size.

Table 1.1 Plain Paper

SIZE	A (mm)	B (mm)	C (mm)	D (mm)	E (mm)
A 4	210.0	297.0	203.2	288.5	3.39 ± 1.0
Letter	215.9	279.4	207.4	270.9	4.23 ± 1.0
Legal	215.9	355.6	207.4	347.1	4.23 ± 1.0
B 5 (ISO)	176.0	250.0	167.5	241.5	4.23 ± 1.0
Executive	184.2	266.7	175.7	258.2	4.23 ± 1.0
A 5	148.0	210.0	139.5	201.5	4.23 ± 1.0
B 6 (ISO)	125.0	176.0	116.5	167.5	4.23 ± 1.0
A 6	105.0	148.0	96.5	139.5	4.23 ± 1.0

Table 1.2 Envelope

SIZE	A (mm)	B (mm)	C (mm)	D (mm)	E (mm)
COM-10	104.8	241.3	96.3	232.8	4.23 ± 1.0
MONARCH	98.4	190.5	89.9	182.0	4.23 ± 1.0
DL	110.1	221.0	101.6	212.5	4.23 ± 1.0
C5	162.2	228.6	154.1	220.1	4.23 ± 1.0
B5 (ISO)	176.0	250.0	167.5	241.5	4.23 ± 1.0

(The sizes above are nominal sizes according to ISO.)

An A4 sheet accepts 80 PICA-pitch characters (203.2mm).

(14) Standard interfaces

Automatic interface selection

- Centronics, Bi-directional parallel
- RS-232C serial

Baud rate	:	150, 300,1200, 2400, 4800, 9600 19200, 38400, 57600, 115200 bps
Start bit	:	1 bit
Stop bit	:	1 bit or 2 bits
Data length	:	7 bits or 8 bits
Parity	:	Odd, Even, or None
Protocol	:	Xon/Xoff or DTR

(15) Emulation

Automatic emulation selection

- HP Laser Jet 4 (PCL Level 5^{e})
- EPSON FX-850
- IBM Proprinter XL
- BR-Script level 2 (PostScript language emulation interpreter)
- HP- GL

(16) CPU

79R3041 (20MHz)

(17) Resident fonts 75 scalable fonts and 12 bitmapped fonts

■ HP Laser Jet 4, EPSON FX-850, IBM Proprinter XL

Scalable Fonts:

Intellifont Compatible Fonts:

- Albertville, Extrabold
- Antique Oakland, Oblique, Bold
- Brougham, Oblique, Bold, Bold Oblique
- Cleveland Condensed
- Connecticut
- Guatemala Antique, Italic, Bold, Bold Italic
- Letter Gothic, Oblique, Bold
- Maryland
- Oklahoma, Oblique, Bold, Bold Oblique
- PC Brussels Light, Light Italic, Demi, Demi Italic
- PC Tennessee Roman, Italic, Bold, Bold Italic
- Utah, Oblique, Bold, Bold Oblique
- Utah Condensed, Oblique, Bold, Bold Oblique

Windows 3.1 Compatible Fonts:

- Tennessee Roman, Italic, Bold, Bold Italic
- Helsinki, Oblique, Bold, Bold Oblique
- BR Symbol
- W Dingbats

BR-Script Fonts:

- Atlanta Book, Book Oblique, Demi, Demi Oblique
- Copenhagen Roman, Italic, Bold, Bold Italic
- Portugal Roman, Italic, Bold, Bold Italic
- Calgary Medium Italic

Brother Original Fonts:

- Bermuda Script
- Germany
- San Diego
- US Roman

Bitmapped Fonts (Portrait and Landscape):

- Letter Gothic 16.66 Medium, Italic, Bold, Bold Italic
- OCR-A
- OCR-B

■ BR-Script Level 2 Mode

Scalable Fonts:

- Atlanta Book, Book Oblique, Demi, Demi Oblique
- Brussels Light, Light Italic, Demi, Demi Italic
- Brougham, Oblique, Bold, Bold Oblique
- Helsinki, Oblique, Bold, Bold Oblique
- Helsinki Narrow, Oblique, Bold, Bold Oblique
- Copenhagen Roman, Italic, Bold, Bold Italic
- Portugal Roman, Italic, Bold, Bold Italic
- Tennessee Roman, Italic, Bold, Bold Italic
- Calgary Medium Italic
- BR Symbol
- BR Dingbats
- Albertville, Extrabold
- Antique Oakland, Oblique, Bold
- Cleveland Condensed
- Conecticut
- Guatemala Antique, Italic, Bold, Bold Italic
- Letter Gothic, Oblique, Bold
- Maryland
- Oklahoma, Oblique, Bold, Bold Oblique
- Utah, Oblique, Bold, Bold Oblique
- Utah Condensed, Oblique, Bold, Bold Oblique
- Bermuda Script
- Germany
- San Diego
- US Roman

(18)	RAM	4M bytes (expandable to 66M bytes)
(19)	Font cartridge/card slots	Two slots One font cartridge slot and one font card slot
(20)	Power souse	USA and Canada : AC 110 to 120 V,50Hz (HL-1660 only)60 Hz Europe and Australia : AC 220 to 240 V, 50 Hz
(21)	Power consumption	Printing : 500 WH or less Stand-by : 80 WH or less Sleep : 20 WH
(22)	Noise	Printing : 53 dB A or less Stand-by : 40 dB A or less
(23)	Dimensions (W x H x D)	371.6 x 326.5 x 393 mm (14.6 x12.9 x 15.5 inches)
(24)	Weight	Approx. 15 kg (32.6 Ibs)
(25)	Environmental conditions	
	Operating environment	Temperature 10 ~ 32.5°C Relative humidity 20 ~ 80%RH (No condensation allowed) Air pressure 613 ~ 1013 hPa (0 ~ 2,500 m above sea level)
	Non-operating environment	Temperature 0 ~ 35°C Relative humidity 10 ~ 80%RH (No condensation allowed)
	Storage conditions	
	• Printer	Temperature Normal (total storage time x 9/10) 0 ~ 35°C Severe (total storage time x 1/10) High Low 35°C ~ 60°C -20°C ~ 0°C Temperature change (within 3 minutes) High Low 60°C→15°C -20°C→25°C Relative humidity Normal (total storage time x 9/10) 35 ~ 85%RH Severe (total storage time x 1/10) High Low 85 ~ 95%RH 10 ~ 35%RH Air pressure 71.0 ~ 101.3 hPa (Sea level 0 ~ 2500 m) Total storage time 0.5 years

• EP-ED cartridge

Temperature

Normal (2.45 years max.)

0 ~ 35°C

Severe (0.05 years max.)

High	Low
35°C ~ 40°C	-20°C ~ 0°C

Temperature change (within 3 minutes)

High	Low
40°C → 15°C	-20°C → 25°C

Relative humidity

Normal (2.45 years max.)

35 ~ 85%RH

Severe (0.05 years max.)

High	Low
85 ~ 95%RH	10 ~ 35%RH

Air pressure 71.0 ~ 101.3 hPa

Maximum total storage time: 2.5 years including used time

3. SAFETY INFORMATION

3.1 Laser Safety (110 ~ 120V Model only)

This printer is certified as a Class 1 laser product under the US Department of Health and Human Services (DHHS) Radiation Performance Standard according to the Radiation Control for Health and Safety Act of 1968. This means that the printer does not produce hazardous laser radiation,

Since radiation emitted inside the printer is completely confined within the protective housings and external covers, the laser beam cannot escape from the machine during any phase of user operation.

3.2 CDRH Regulations (110 ~ 120V Model only)

The center for Devices and Radiological Health (CDRH) of the US Food and Drug Administration implemented regulations for laser products on August 2, 1976. These regulations apply to laser products manufactured from August 1, 1976. Compliance is mandatory for products marketed in the United States. The label shown below indicates compliance with the CDRH regulations and must be attached to laser products marketed in the United States.

MANUFACTURED :

BROTHER INDUSTRIES, LTD.

15-1, Naeshiro-cho, Mizuho-ku Nagoya 467, Japan.

This product complies with FDA radiation

performance standards , 21 CFR chapter 1

subchapter J.

Figure 1.2

Caution: Use of controls, adjustments or performance of procedures other than those specified in this manual may result in hazardous radiation exposure.

3.3 Additional Information

When servicing or adjusting the optical system of the printer, be careful not to place screwdrivers or other reflective objects in the path of the laser beam. Be sure to take off any personal accessories such as watches and rings before working on the printer. A reflected beam, though invisible, can permanently damage the eyes.

Since the beam is invisible, the following label is attached to the inside of covers where danger of exposure to laser radiation exist.

Figure 1.3

CHAPTER II THEORY OF OPERATION

1. BASIC OPERATIONS

1.3 Basic Sequence of Operations

Timing for two consecutive prints on A4 paper.

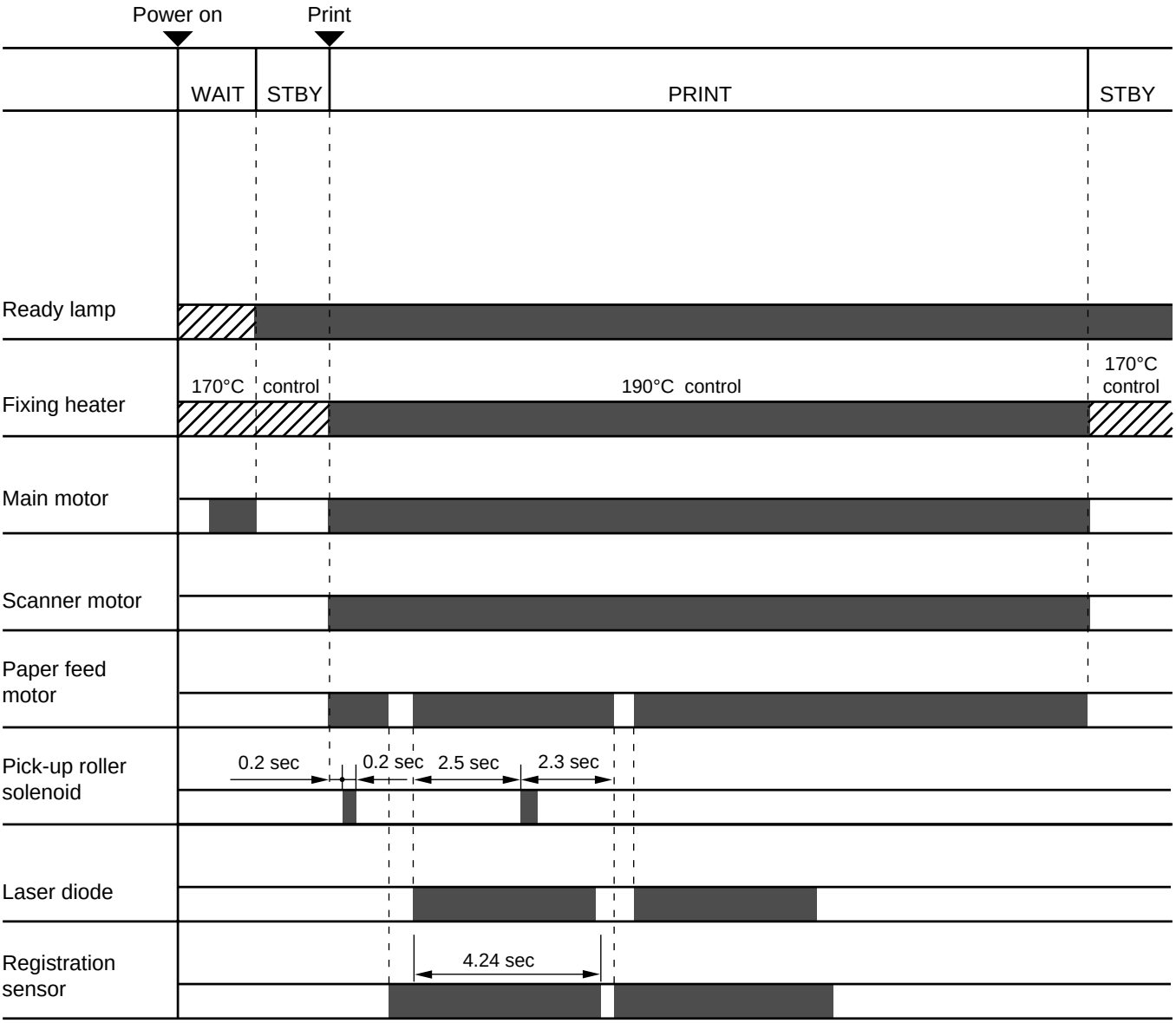

Figure 2.1

Note: The times in the table above show the HL-1260e. All of them become 1/1.33 in case of the HL-1660.

4. PAPER PICK-UP/FEED SYSTEM

4.2 Cassette Feed

When the fixing rollers reach the specified temperature while a cassette with paper is in the printer, the READY lamp changes from flashing to lighting.

When the engine controller circuit receives $\overline{\text{PRNT}}$ or $\overline{\text{PRFD}}$ signal from the video controller circuit, the paper feed motor starts rotation. About 0.2 seconds later, the printer actuates the tray1 pick-up roller solenoid and the pick-up roller makes one rotation. This feeds paper to the photosensitive drum.

Timing chart for the pick-up one sheet

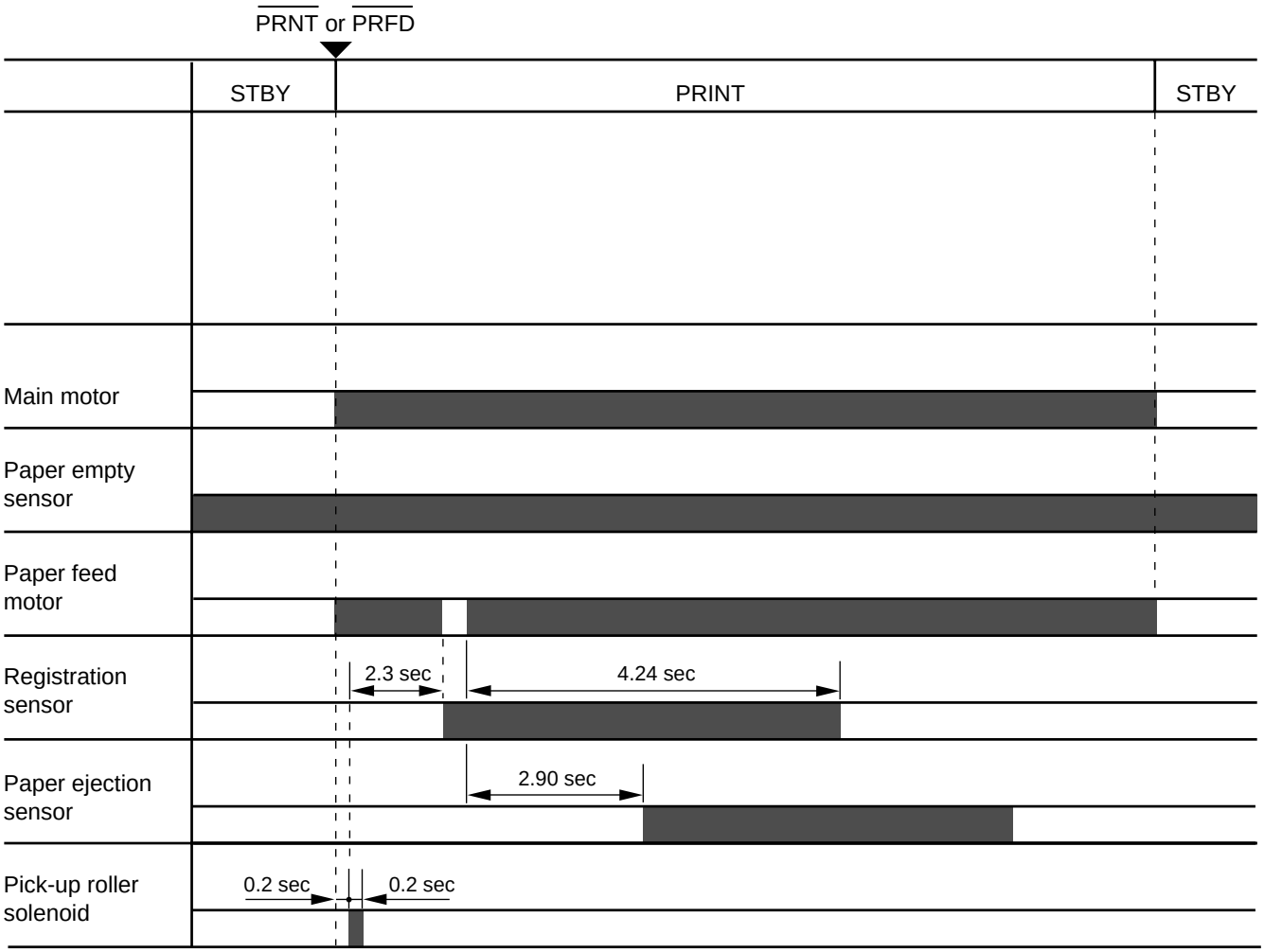

Figure 2.2

Note: The times in the table above show the HL-1260e. All of them become 1/1.3333 in case of the HL-1660.

4.3 MP Tray Feed

The timing of the MP tray feed is identical to the timing of the cassette paper feed except for the following points:

(1) The paper empty sensors are different.

Cassette feed : Tray1 paper empty sensor

MP tray feed : MP tray paper empty sensor

(2) The pick-up roller solenoids are different.

Cassette feed : Tray1 pick-up roller solenoid

MP tray feed : MP tray pick-up roller solenoid

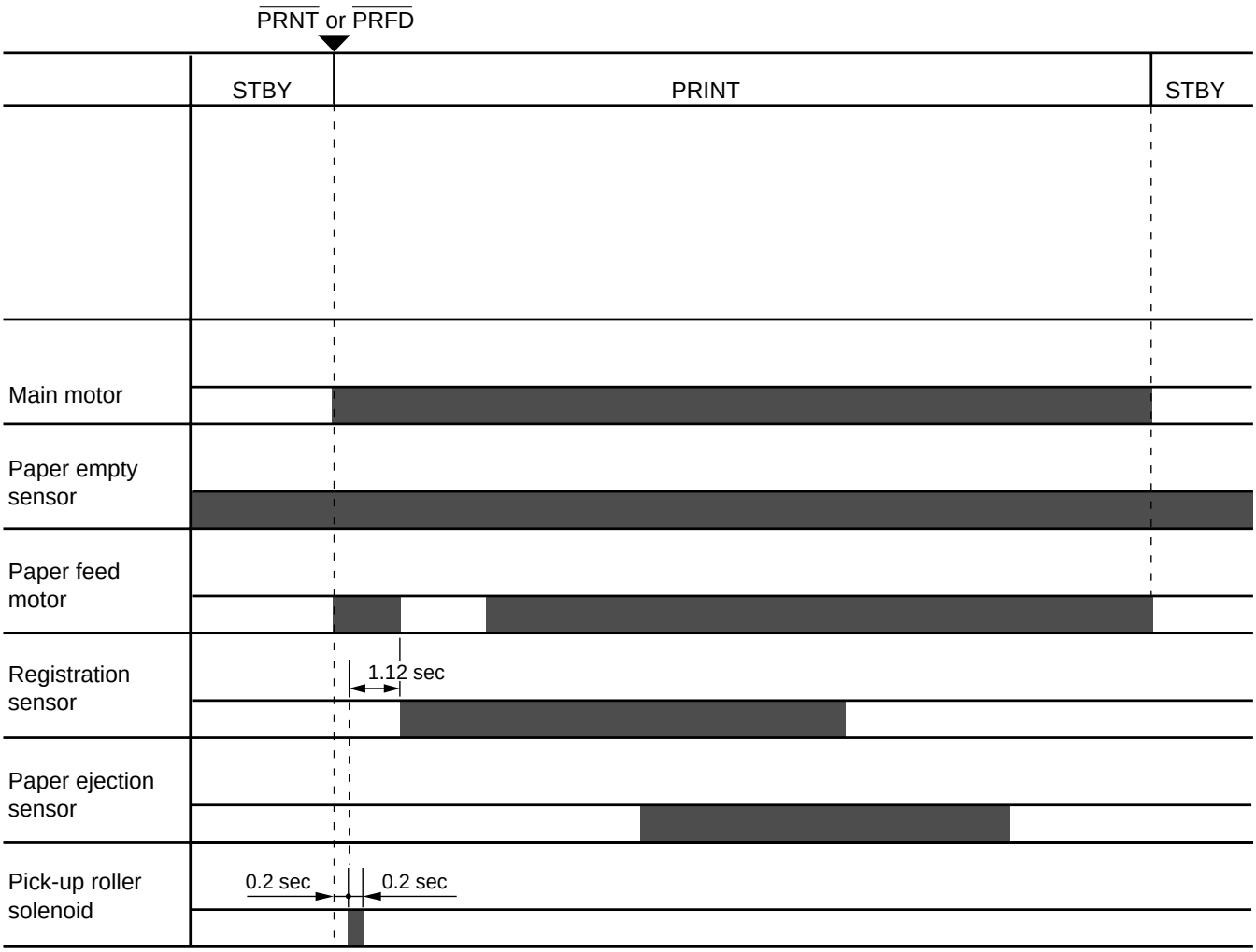

Figure 2.3

Note: The times in the table above show the HL-1260e. All of them become 1/1.3333 in case of the HL-1660.

4.4 Paper Jam Detection

The printer has a registration sensor and a paper eject sensor at the paper outlet to detect whether the printed paper has been fed correctly. A paper jam is detected by whether the paper is present at the sensor at the check periods programmed in the engine CPU memory. If the engine CPU detects a paper jam, the main motor, paper feed motor and scanner motor is turned off immediately and the jam status is transmitted to the video controller circuit.

A paper jam is detected in any of following conditions:

1) Paper exists at the paper ejection sensor or the registration sensor when power is switched on. (JAM REAR or JAM INSIDE)
2) Paper has not reached the registration sensor within a specified time (JAM TRAYS).
3) Printed paper has not passed through the registration sensor within a specified time (JAM INSIDE (1)).
4) Printed paper has not reached the paper ejection sensor within a specified time (JAM INSIDE (2)).
5) Printed paper has not passed through the paper ejection sensor within a specified time (JAM REAR).

Jam tray

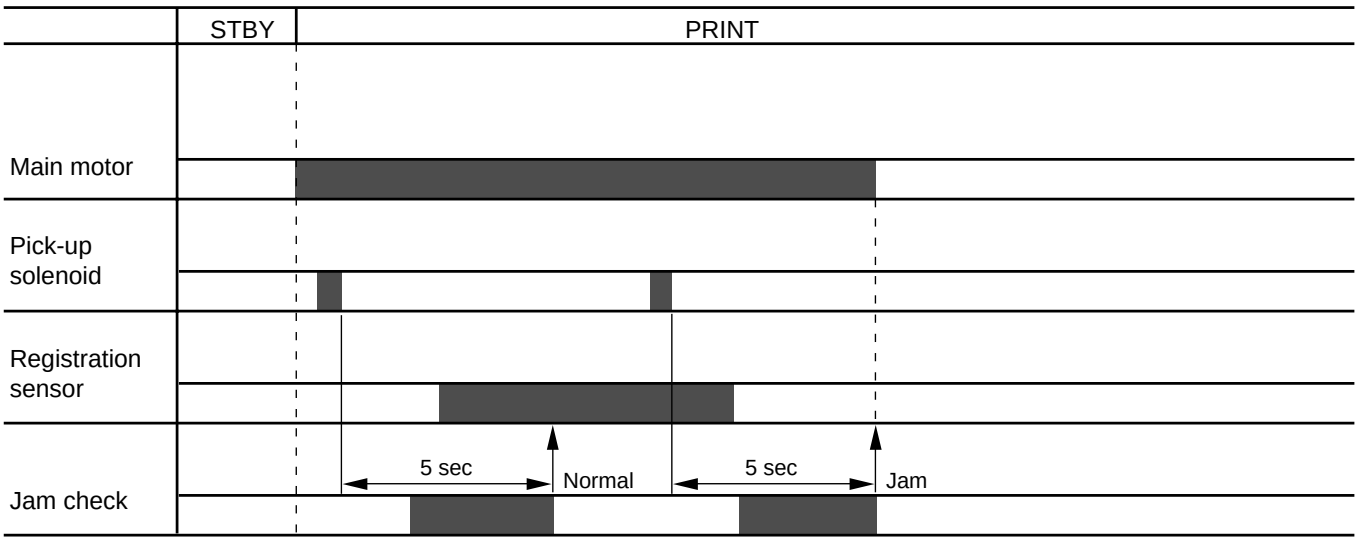

Figure 2.4

Note: The times in the table above show the HL-1260e. All of them become 1/1.3333 in case of the HL-1660.

Jam inside (1)

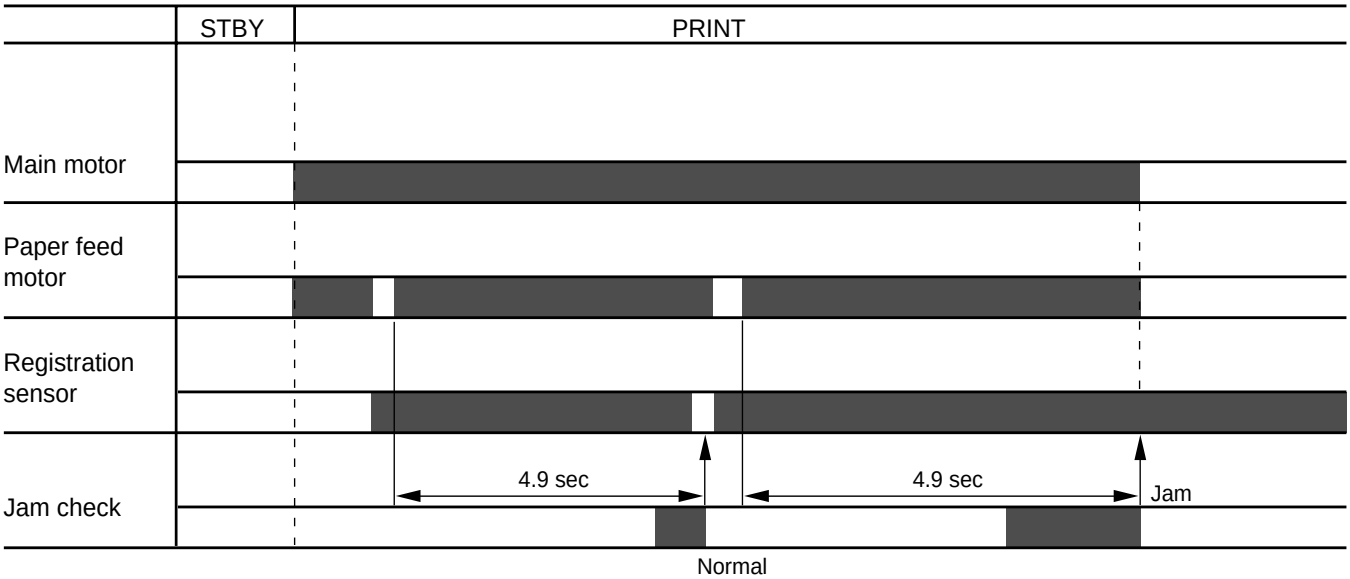

Figure 2.5

Note: The times in the table above show the HL-1260e. All of them become 1/1.3333 in case of the HL-1660.

Jam inside (2)

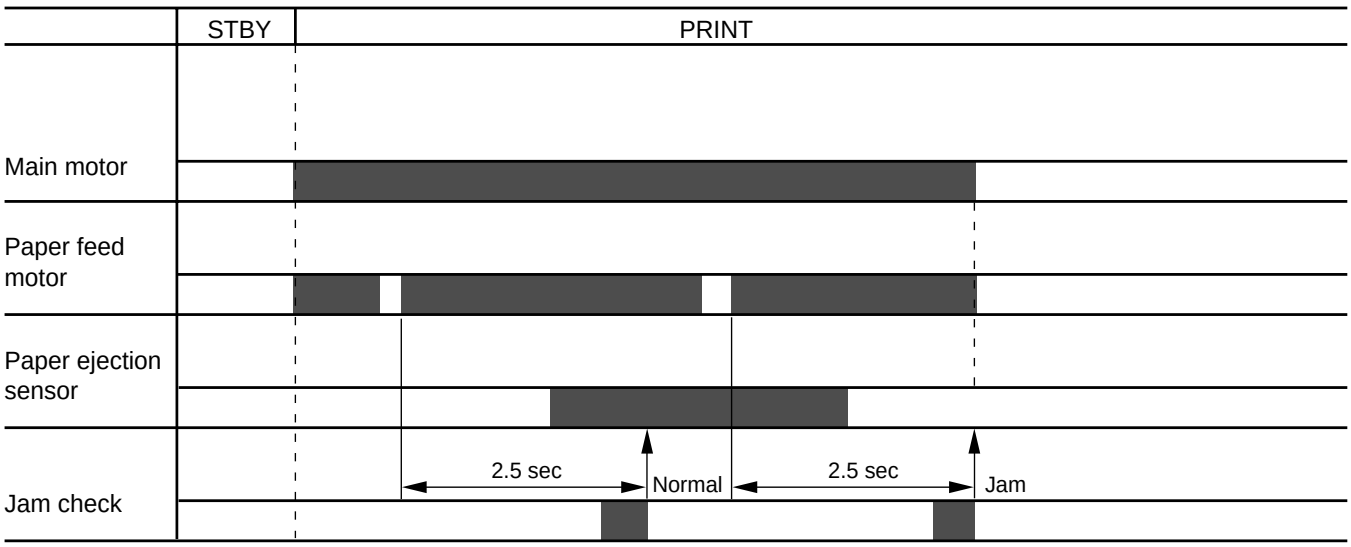

Figure 2.6

Note: The times in the table above show the HL-1260e. All of them become 1/1.3333 in case of the HL-1660.

Jam rear

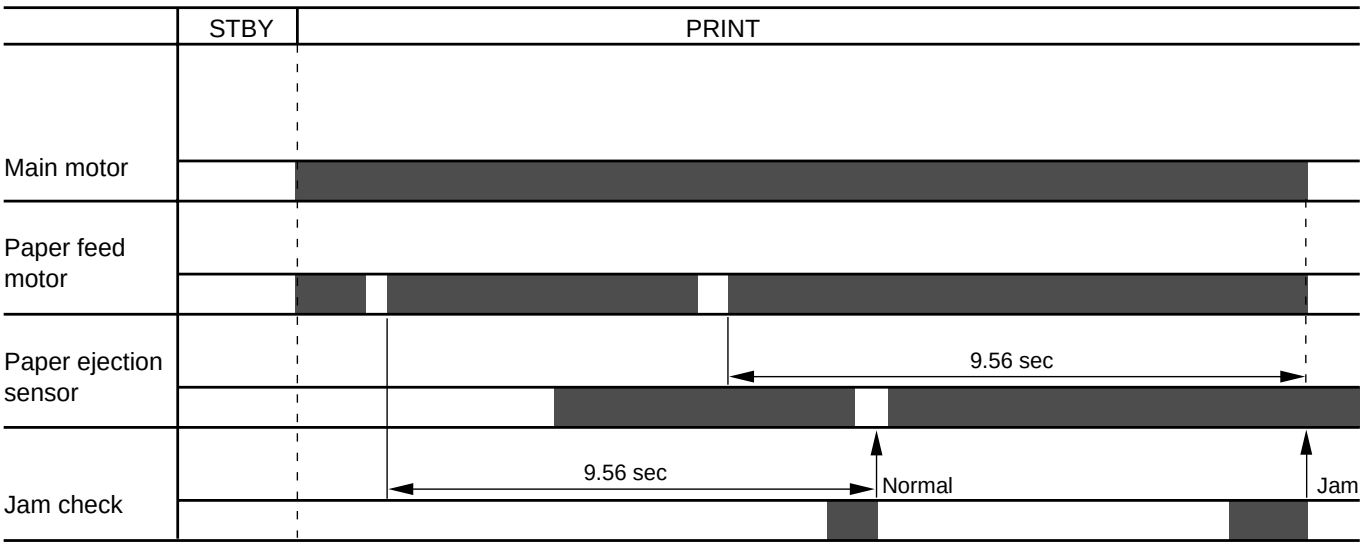

Figure 2.7

Note: The times in the table above show the HL-1260e. All of them become 1/1.3333 in case of the HL-1660.

CHAPTER III ELECTRICAL SYSTEM

Electric signal levels are expressed by ”High” (approximate the supply voltage) or ”Low” (approximate 0V). Signals with hyphen or slash, such as -FSRD or FSRD/, are low-active and signals without hyphen or slash, such as FSRD, are high-active signals.

1. MAIN PCB

1.1 Outline

The Main PCB consists of the Video Controller Circuit and the Engine Controller Circuit.

The Video Controller Circuit performs the following functions.

(1) Converts data received from an external device, such as a personal computer, through Centronics parallel interface or RS-232C serial interface into video data and transfers it to the Engine controller circuit.

(2) Displays the current printer status in LED and LCD, and enables settings from the control panel.

The operation sequence of the printer controlled by a microprocessor in the Engine Controller Circuit. The Engine Controller Circuit outputs signals to drive the various loads on the laser diode, scanner motor, main motor, etc. according to the print commands and image data from the external device.

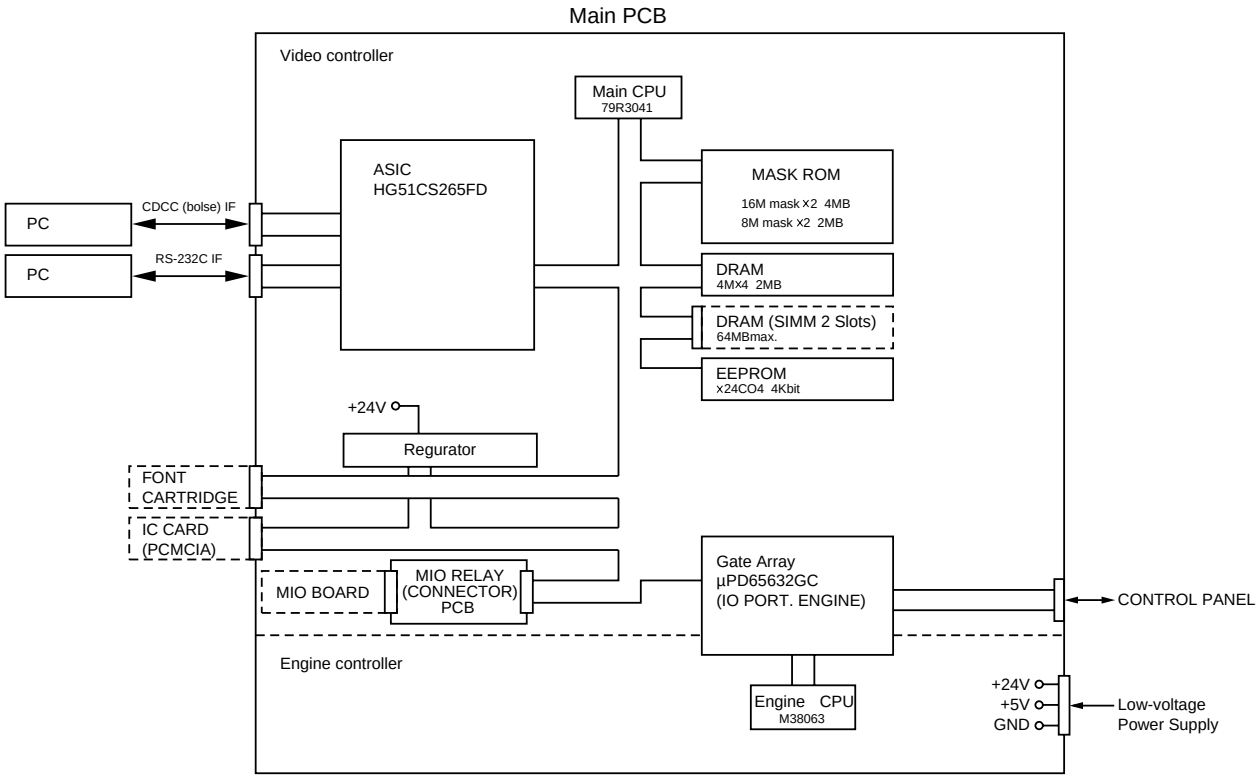

Figure 3.1 Main PCB Block Diagram

1.2 Video Controller Circuit

(1) CPU block

CPU IDT79R3041-20J manufactured by Integrated Device Technology

RISC chip

Clock speed: 19.6608 MHz

Appearance: 84-pin PLCC

(2) ASIC/Gate Array Block

- HG51CS265FD (Hitachi) - 208-pin QFP

  Controls the address decoder, timers, interfaces (Centronics and RS-232C),HRC and GSC.

- µPD65632GC (NEC) - 100-pin QFP

  Controls the I/O ports and others.

(3) Font Cartridge/Card Block

- Font cartridge (option)

  The font cartridge has a 64MB memory area and is controlled by the 16-bit bus.

  The address bus a buffer LS244 and the data bus, a buffer LS245.

- Font Card (option)

  The font card has a 64MB memory area and is controlled by the 16-bit bus.

  The card is supplied with 12V power because the flash card requires 12V power supply when writing or erasing data.

  The address bus is buffered by LS244 and the data bus, is buffered by LS245.

(4) Centronics/RS-232C interface block

- Centronics parallel interface

  Data transmission and reception are controlled by the HG51CS265FD .

- RS-232C

  Data transmission and reception are controlled by the HG51CS265FD .

  The ADM202JRN serves as driver/receiver.

(5) SIMM block

- SIMM (Single-Inline-Memory-Module) allows memory extension up to 66MB
- 2 SIMM sockets are available.
- SIMM should be of 72-pin type and its access time should be less than 80 ns.
- 6 types of SIMM (1MB, 2MB, 4MB, 8MB,16MB and 32MB) can be combined:

  1MB MH25632BJ-7 (MITSUBISHI), HB56D25632B-7A (HITACHI)

  2MB MH51232BJ-7 (MITSUBISHI), HB56D51232B-7A (HITACHI)

  4MB MH1M32EJ-7 (MITSUBISHI), HB56A132BT-7A (HITACHI)

  8MB MH2M32EJ-7 (MITSUBISHI), HB56A232BT-7A (HITACHI)

  16MB THM324000BSG-70 (TOSHIBA)

  32MB THM328020BSG-70 (TOSHIBA)

1) The SIMMs have its printed marking on the PCB by silk screen: SLOT1, and SLOT2, respectively. The SIMMs should be set in the order of SLOT1 - SLOT2.

2) SIMMs should be set in the order of its memory size and in the order of SLOT No.

   Example: 2 SIMMs: 1MB, and 4MB

   SLOT1 - 4MB

   SLOT2 - 1MB

3) The attached Printer SIMM map shows the memory map for 2 SIMMs combined.

(6) ROM block

ROMs store the CPU control program and font data. ROMs are two 16Mbit masked ROMs and two 8Mbit masked ROMs.

Optional sockets are available for two 8Mbit EPROM (µPD27C8000DZ-120 - NEC or equivalent) for expansion.

ROM access time should be less than 120nsec.

8Mbit EPROMs can be used instead of a 16Mbit masked ROM.

(7) DRAM block

DRAMs are used for receiving buffer or working area of the CPU. The DRAM block contains four 4Mbit DRAMs, thus having 2MB memory capacity in total.

The refreshing method is CBR (Cas Before Ras).

DRAM access time should be less than 80nsec.

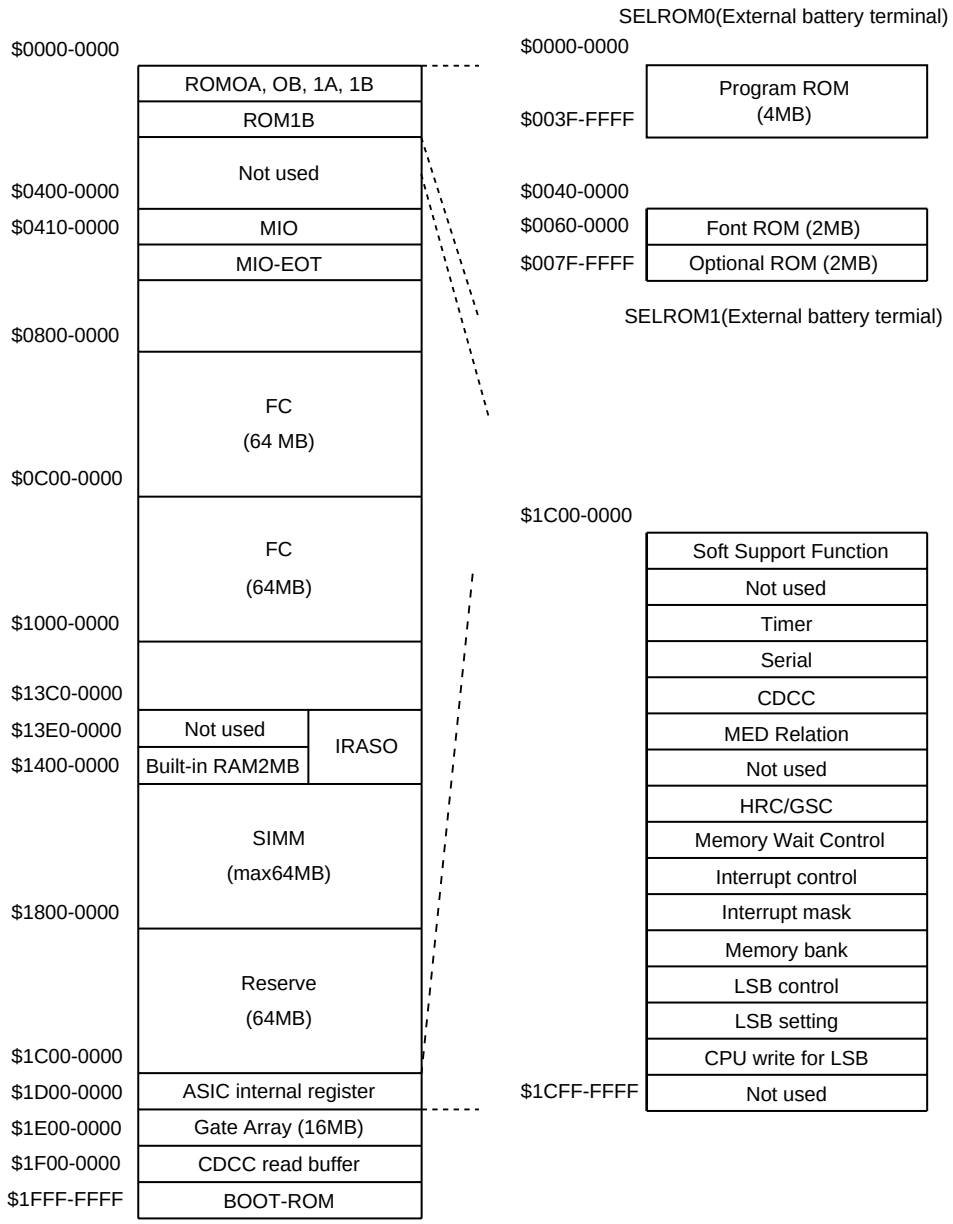

Figure 3.2 Memory Map

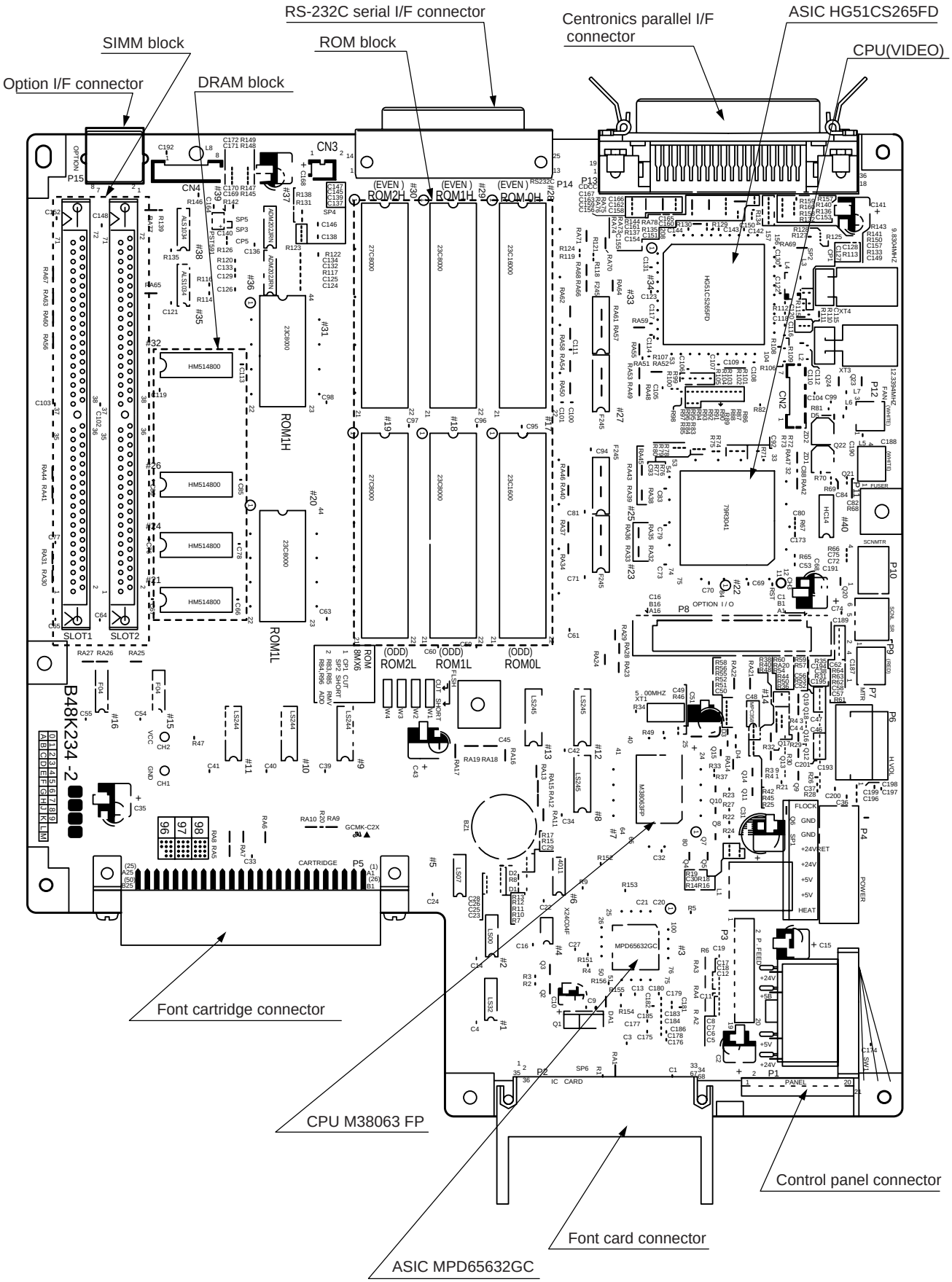

Figure 3.3 Main PCB (HL-1260e)

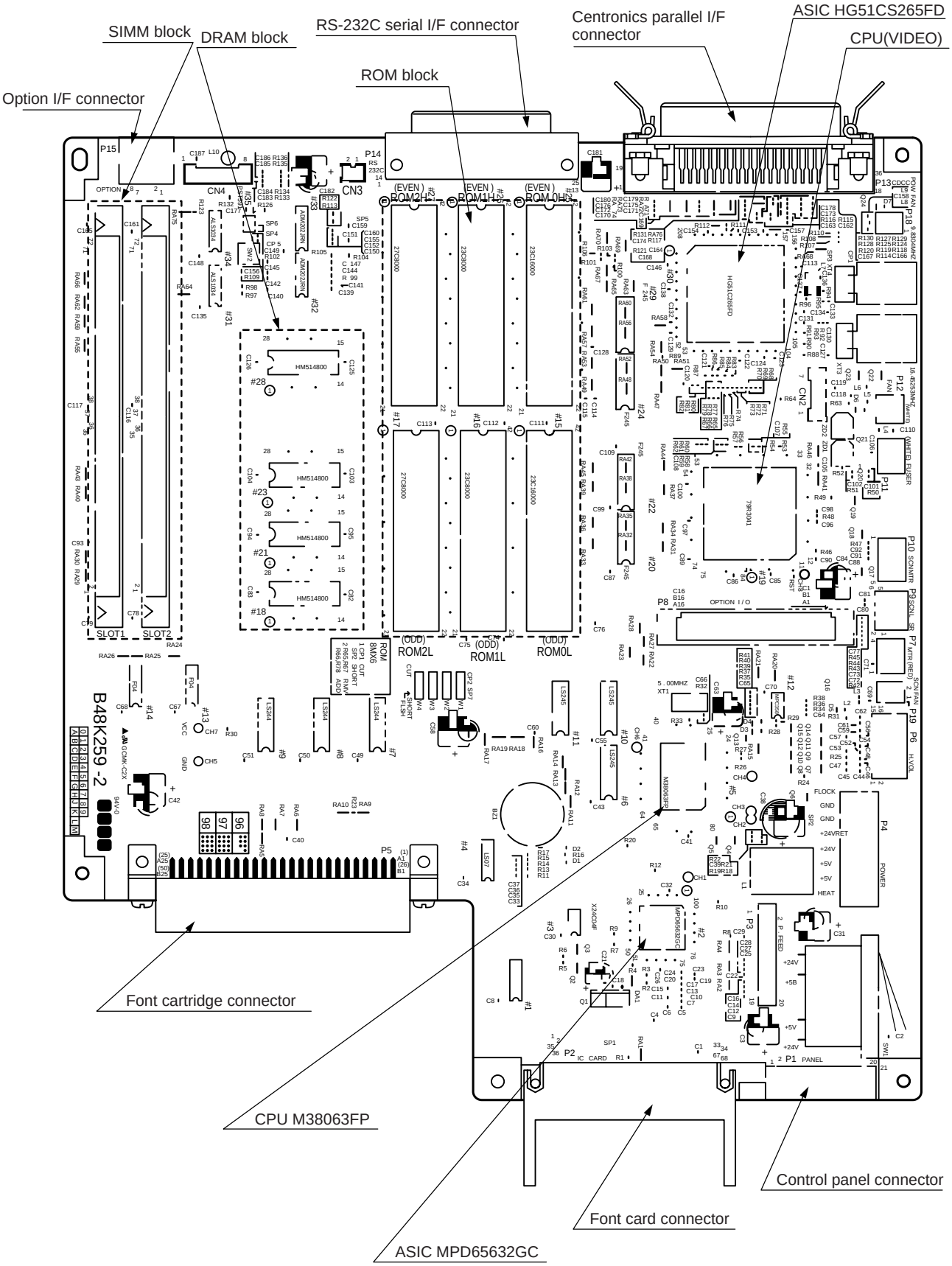

Figure 3.4 Main PCB (HL-1660)

1.3 Engine Controller Circuit

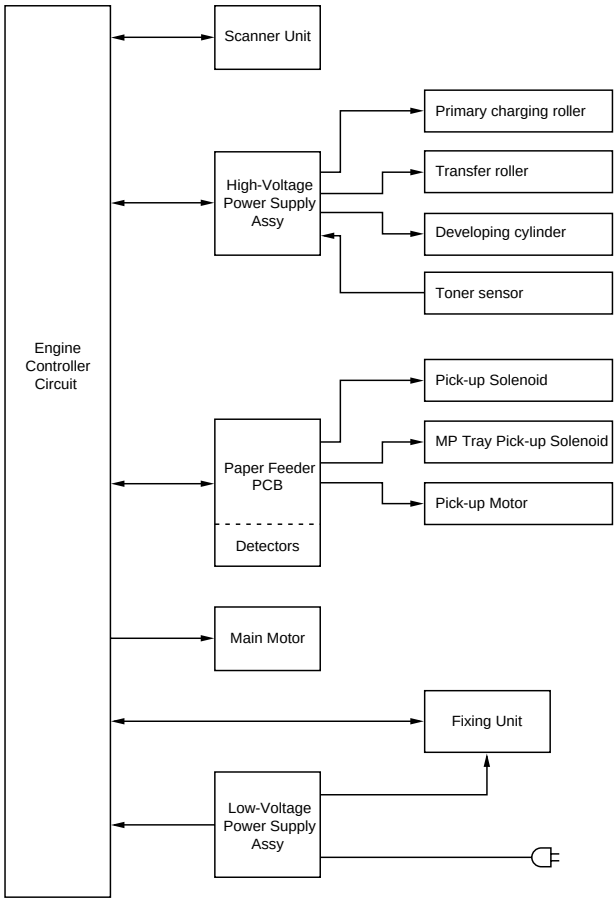

Figure 3.5 Engine Controller Block Diagram

Components in the Circuit (refer to the next page)

A. Engine Control CPU
B. Low-Voltage Power Supply Connector
C. Fuser Unit Control
   C-1. Heater Drive Circuit
   C-2. Heater Temperature Input Signal
   C-3. Paper Eject Input Signal
D. Paper Feeder PCB Control Signals and Connector
E. Option Interface Circuit and Connector
F. High-Voltage Power Supply Control Circuit and Connector
G. Scanner Unit Control
   G-1. Scanner Motor Control Circuit
   G-2. Laser Diode Drive PCB Control Circuit
H. Fan Motor Drive Circuit
   H-1. Fan Motor Drive Circuit
   H-2. Scanner Fan Motor Drive Circuit
I. Main Motor Control Circuit
J. Cover Open Detect Circuit
K. Safety Door Switch Circuit

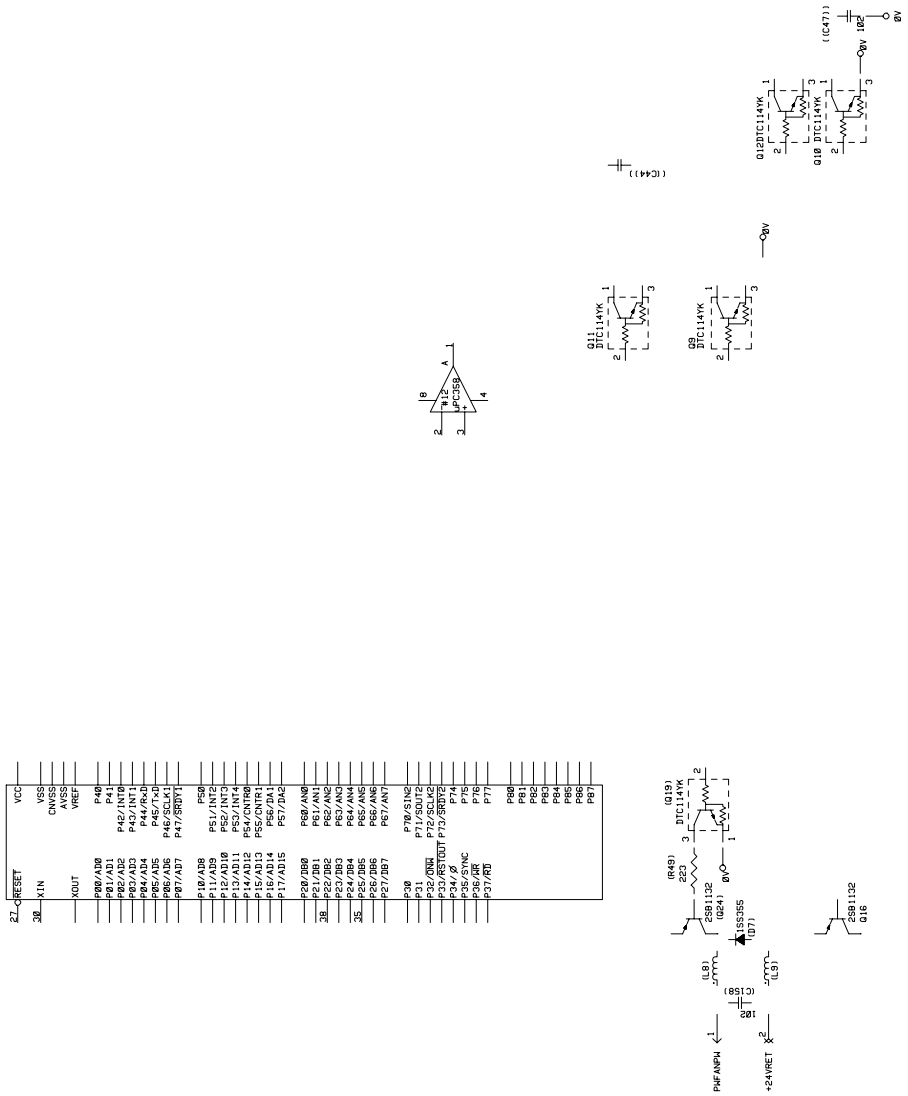

Figure 3.6 Main PCB Circuit

PRINTER DISASSEMBLING PROCEDURE

1.2 Toner Cartridge Lid

(1) Remove the toner cartridge lid from the upper cover.

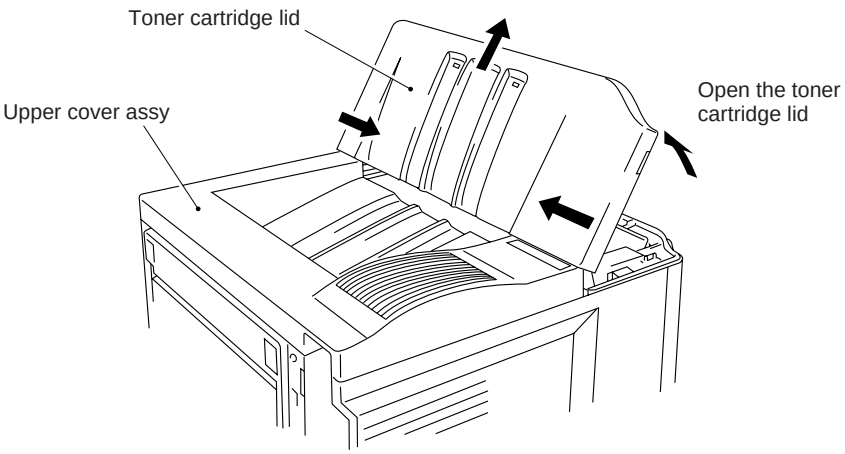

Figure 4.1

1.7 DC Fan Motor

(1) Remove the DC fan motor from the DC fan motor holder by loosening the two screws.

(2) Loosen the screws securing the PCB holder and remove the entire DC fan motor holder.

(3) Remove the fan harness connector from the main PCB assy.

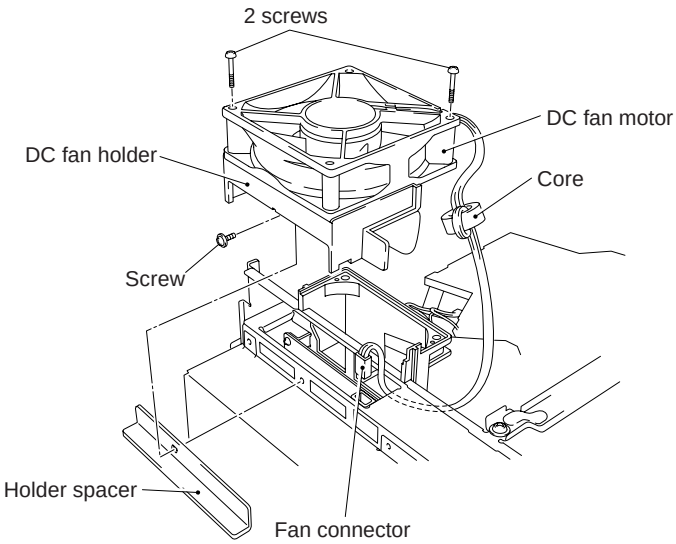

Figure 4.2

1.8 Main PCB

(1) Remove the SIMM replace lid.

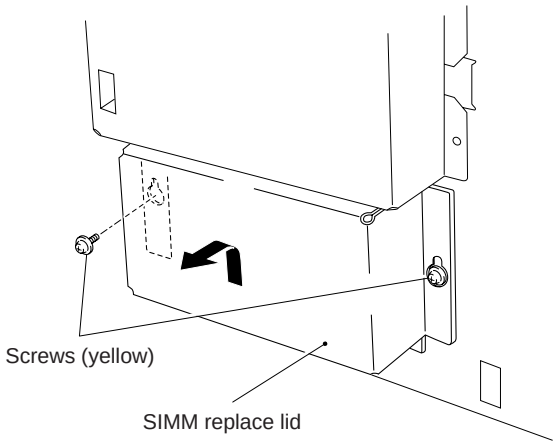

Figure 4.3

(2) Remove the MIO box.

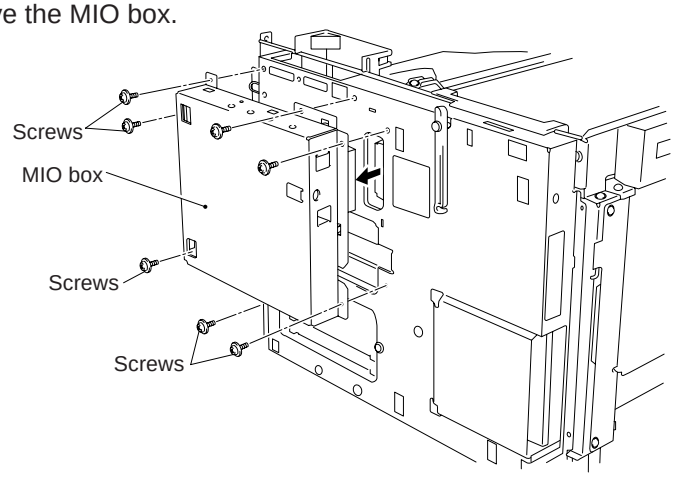

Figure 4.4

(3) Remove the PCB holder by loosening PCB holder fixing screws, 2 centronics connector screws and 2 RS-232C connector screws.

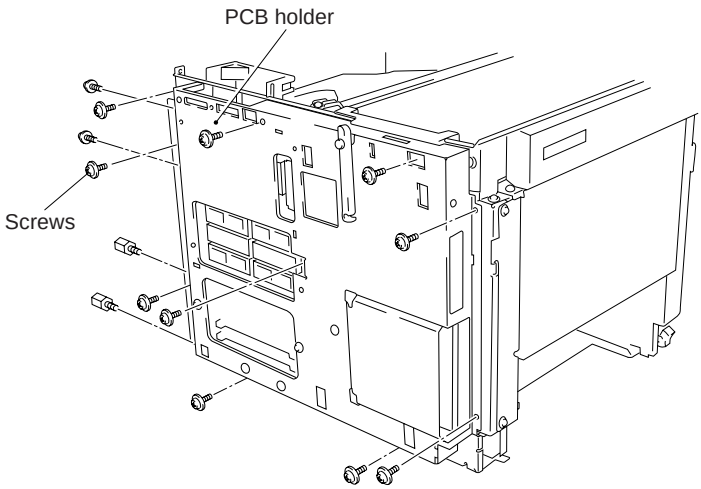

Figure 4.5

(4) Remove the switch flat cable 21P and the feed flat cable 20P.

(5) Remove the fan harness 3P, the fuser harness 4P, the Polygon harness 5P, the SCN flat cable 6P, the DC motor harness 4P, the SCN fan harness 2P, the HV harness 16P and the LV harness 8P.

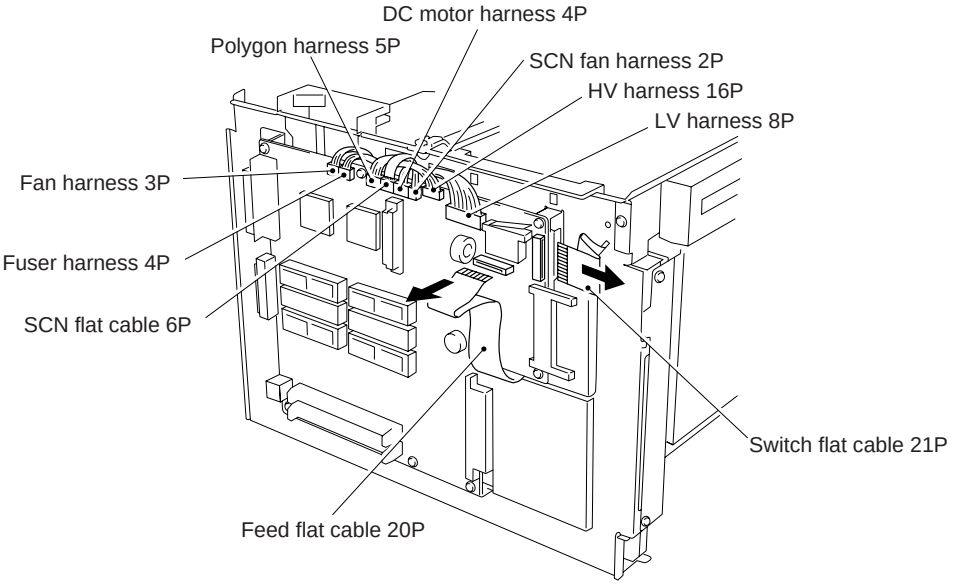

Figure 4.6

(6) Remove the main PCB assy.

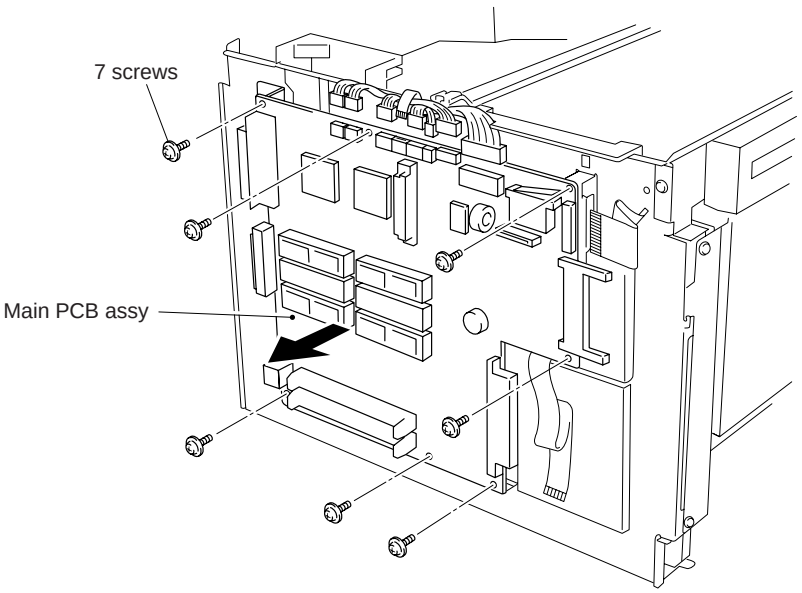

Figure 4.7

1.10 Scanner Unit

(1) Unplug the LD PCB harness (scanner flat cable) connector (6P), and polygon harness (5P).

(2) Remove the beam from the body by loosening the screws.

(3) Remove the scanner unit from the body by loosening the screws.

Caution: Do not disassemble the scanner unit, it can be only adjusted at the factory.

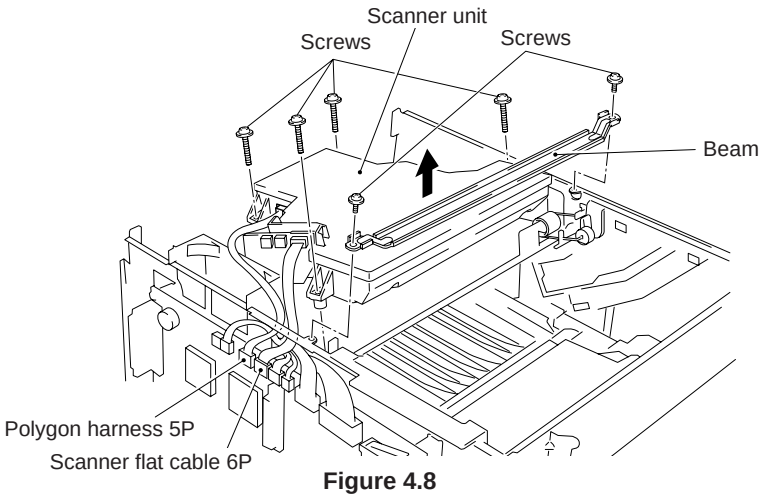

Figure 4.8

1.11 Cartridge Stopper Assy

(1) Loosen 4 screws and remove the scanner mount plate in the direction of the arrow (the ground leaf spring is also released at the same time.)

(2) Release the hook by bending the arm of the cartridge stopper assy (Ⓐ), slide the cartridge stopper assy to the left (Ⓑ) and the remove the cartridge stopper assy (Ⓒ).

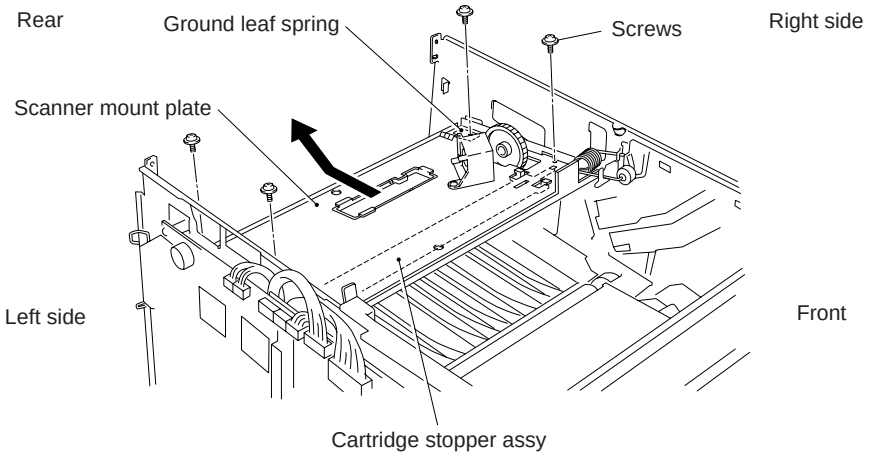

Figure 4.9

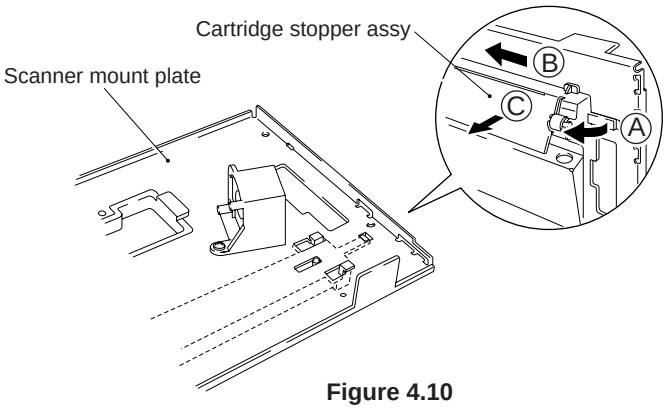

Figure 4.10

1.31 DC Gear Holder Assy

(1) Remove the DC motor connector, then remove the paper delivery holder spring.

(2) Loosen the 4 screws and remove the DC gear unit from the body.

(3) Remove the paper delivery gear assy, the gears, the gear 48 spring, and the washer.

(4) Loosen the 3 screws and remove the DC motor assy from the gear holder.

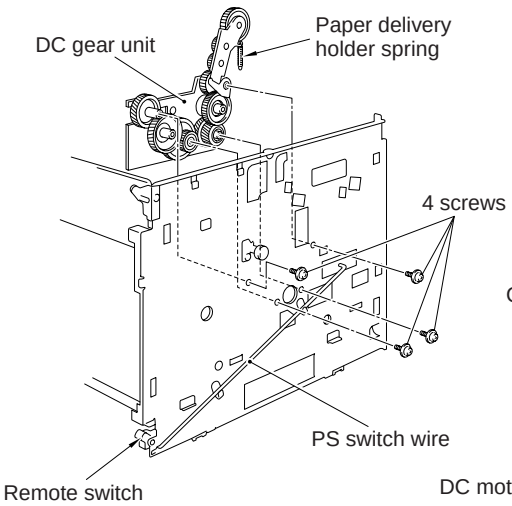

Figure 4.11

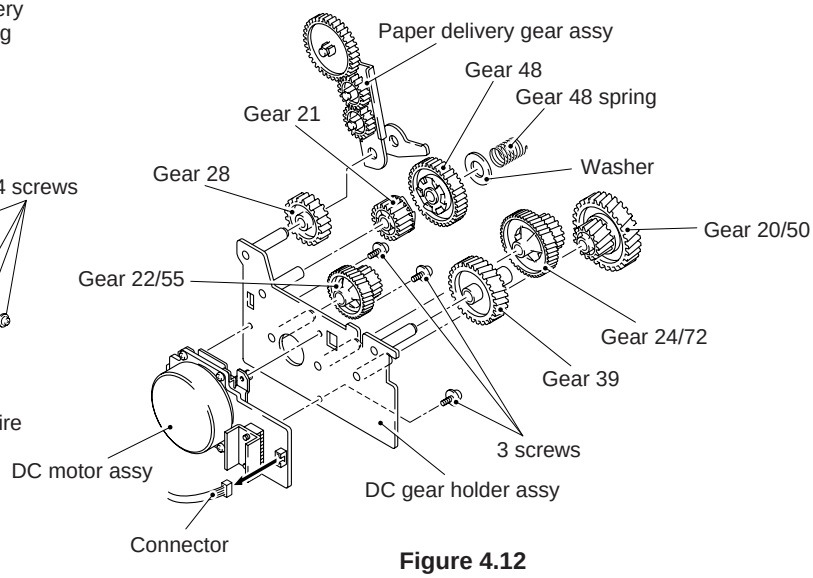

Figure 4.12

1.31.1 Scanner fan motor

(1) Loosen the 1 screw and remove the scanner fan holder.

(2) Loosen the 2 screws and pull out the scanner fan holder from the scanner fan motor.

(3) Remove the scanner fan motor harness connector from the main PCB.

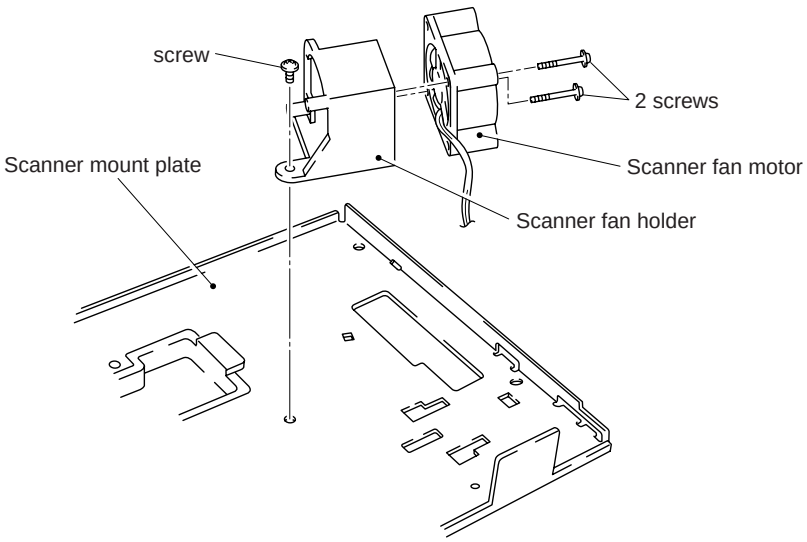

Figure 4.13

1.36 Paper Tray

(1) Release the roller holder fixing pawl and remove the roller holder by pulling it out upward.

(2) Remove the roller.

(3) Remove the separation pad assy (pull it out by turning it) .

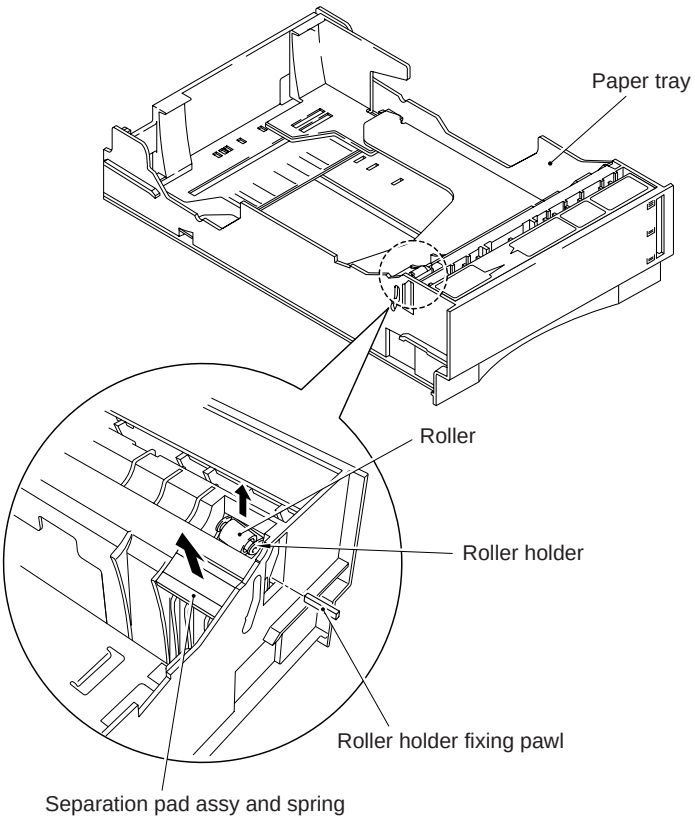

Figure 4.14

(4) Remove the tray gear holder from the other side by loosening the 3 screws and remove the gear 56T link.

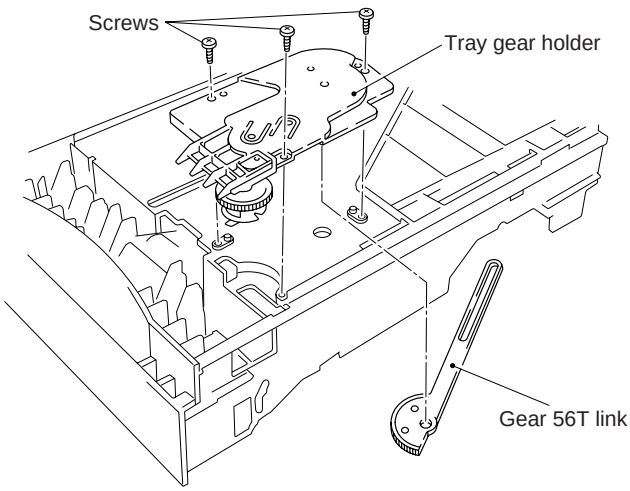

Figure 4.15

CHAPTER V MAINTENANCE AND SERVICING

2. CONSUMABLE PARTS STANDARD ENDURANCE TABLE

The table below shows the suspected mean life (in terms of number of sheets) of the consumable parts, that is the parts which subject to deterioration or damage, should be replaced at least once during the period of warranty of the product only when the parts have such a failure.

Table 5.1

No.	Description	Part No.	Qty.	Service life (number of print)	Remarks
1	Fixing unit	UH2630001 (UH2816001)	1	(100,000)	120V
	Fixing unit	UH2631001 (UH2817001)	1	(100,000)	230V
2	Pick-up roller assy MP Pick-up roller assy cassette	UH2362001 UH2362001	2	(100,000)	
3	Separation pad MP Separation pad cassette	UH2393001 UH2487001	2	(100,000)	
4	Transfer roller assy	UH2788001 (UH2323001)	1	(100,000)	

Note: The above table shows only estimated value, so these value are subject to change without prior notice.

CHAPTER VI TROUBLESHOOTING

4. TROUBLESHOOTING OF MALFUNCTIONS

M-1	No DC power supplied

Possible cause	Step	Check	Result	Remedy
PCBs	1	Does any PCB have the short circuit between +24V and 0V,+5V and 0V or +24V and +5V?	Yes	Replace the PCB having the short circuit.
Low-voltage power supply PCB Main PCB LV harness DC fan motor	2	Is the voltage of P3-8 in the low-voltage power supply PCB connector 0V?	Yes	Replace the low-voltage power supply PCB assy.
			No	Replace the main PCB assy, the LV harness or the DC fan motor.

M-2	Malfunction of LCD display on the control panel.

Possible cause	Step	Check	Result	Remedy
LCD module Control panel PCB Switch flat cable Main PCB	1	Dose the voltage of the following signals vary to 5V or 0V when the LCD displays are changed through switch operations? (Check following signals using the digital memory scope with the trigger function for this check) Signal — Main PCB — Panel PCB — LCD PAD4 — P1-9 — P1-13 — P2-4 — 7 PAD5 — P1-5 — P1-17 — P2-3 — 8 PAD6 — P1-11 — P1-11 — P2-2 — 9 PAD7 — P1-4 — P1-18 — P2-1 — 10 LCDRS — P1-3 — P1-19 — P2-7 — 4 LCDE — P1-2 — P1-20 — P2-5 — 6	Yes	Replace the control panel unit.
			No	Replace the main PCB assy, the switch flat cable or the control panel unit.

M-3	Malfunction of control panel LED lamps.

Possible cause	Step	Check	Result	Remedy
LED lamps Control panel PCB Switch flat cable Main PCB	1	Dose the voltage of the following signals stay 0V while the "04 SELF TEST " is displayed after switching the power on and stay 5V for about 0.5 seconds after the message goes off? (Do the LED lamps turn on and off in response to the signal levels of 0V and 5V?) Signal — Main PCB — Panel PCB LED1(ON LINE) — P1-13 — P1-9 LED2(READY) — P1-7 — P1-15 LED3(DATA) — P1-1 — P1-21 LED4(ALARM) — P1-6 — P1-16	Yes	Replace the control panel unit.
			No	Replace the main PCB assy or the switch flat cable.

M-4	Malfunction of control panel switches.

Possible cause	Step	Check	Result	Remedy
Mis-operation	1	Are the switchs operated according to the operation manual?	No	Operate the switches correctly following the operation manual.
Switch Control panel PCB Switch flat cable Main PCB	2	When a switch is pressed,does the voltage of the following signals change from 5V to 0V? Signal — Main PCB — Panel PCB SW8(SEL) — P1-8 — P1-14 SW7(MODE/EMULATION) — P1-10 — P1-12 SW6(FONT/ECONOMY) — P1-12 — P1-10 SW5(FORM FEED/FEEDER) — P1-14 — P1-8 SW4(SET/COPY) — P1-16 — P1-6 SW3(CONTINUE/SHIFT) — P1-18 — P1-4 SW2(DOWN/RESET) — P1-20 — P1-2 SW1(UP/TEST) — P1-21 — P1-1	Yes	Replace the Main PCB assy.
			No	Replace the control panel unit or the switch flat cable.

M-5	Malfunction of buzzer

Possible cause	Step	Check	Result	Remedy
Operational error	1	Is the "Buzzer on mode "selected according to the operation manual? (To alternate the buzzer on/off mode selection, press the MODE switch and select the "Advanced mode".)	No	Set the buzzer on mode.
Main PCB Buzzer	2	Check the buzzer signal with a oscilloscope. Is the pulse of 4KHz output?	Yes	Replace the main PCB assy.
			No	Replace the main PCB assy.

M-6	"12 COVER OPEN" is displayed even if the upper cover is closed

Possible cause	Step	Check	Result	Remedy
Upper cover Main PCB	1	Does the upper cover hook press the actuator of the interlock switch on the main PCB correctly when upper cover is closed?	No	Replace the upper cover assy.
			Yes	Replace the main PCB assy.

M-7	" CHECK XX TRAY " is displayed even if a paper-loaded cassette is mounted (or even if a paper is set on MP tray) XX is MP/T1/T2

Possible cause	Step	Check	Result	Remedy
Mis-operation	1	Is the paper feed mode set correctly?	No	Set paper feed mode correctly.
Actuator	2	Does the actuator for the paper empty sensor operate smoothly?	No	Reassemble or replace the actuator.
Paper empty sensor Feed flat cable	3	Does the voltage of P5-3 (or P5-14) in the Paper feeder PCB connector rise from 0V to 5V when the paper empty sensor is covered?	No	Replace the paper feed/size-sw PCB assy or feed flat cable .
Paper feed flat cable Main PCB	4	Does the voltage of P3-3 (or P3-14) in the main PCB connector rise from 0V to 5V when the paper empty sensor is covered?	No	Replace the feed flat cable.
			Yes	Replace the main PCB assy.

M-8	"14 NO CARTRIDGE " is displayed

Possible cause	Step	Check	Result	Remedy
EP-ED cartridge	1	Is an EP-ED cartridge installed correctly?	No	Install the EP-ED cartridge correctly.
Transfer unit electrode	2	Is the electrode of the transfer unit dirty?	Yes	Clean the electrode of the transfer unit.
High-voltage power supply PCB	3	Is the voltage of P4-13 in the high-voltage power supply PCB connector higher than that of P4-11 over 2.5V?	Yes	Replace the high-voltage power supply PCB assy.
HV harness Main PCB	4	Is the voltage of P6-13 in the main PCB connector higher than that of P6-11 over 2.5V?	Yes	Replace the HV harness.
			No	Replace the main PCB assy.

M-9	"16 TONER EMPTY" is displayed

Possible cause	Step	Check	Result	Remedy
EP-ED cartridge	1	Take the EP-ED cartridge out of the printer and rock it to distribute the toner evenly. When the cartridge is returned to the printer, does the LCD show "00 READY"?	Yes	The problem was caused by toner onesided due to too little toner remaining. Prepare to replace the new cartridge.
High-voltage electrode	2	Are the developing bias or the toner sensor electrode of the high-voltage power supply PCB assy dirty?	Yes	Clean the electrode.
High-voltage power supply PCB	3	Is the voltage of P4-13 in high-voltage power supply PCB connector higher than that of P4-11, when the EP-ED cartridge which is full with toner is installed?	Yes	Replace the high-voltage power supply PCB assy.
HV harness Main PCB	4	Is the voltage of P6-13 in the main PCB connector higher than that of P6-11?	Yes	Replace the HV harness.
			No	Replace the main PCB assy.

M-10	"13 JAM XXXXXX" is not displayed even if a paper jam has occured (or is displayed even if a paper jam has not occurred) XXXXXX is TRAYS/INSIDE/REAR/DUPLEX.

Possible cause	Step	Check	Result	Remedy
Actuator	1	Does the actuator of the paper delivery sensor or the registration sensor operate smoothly?	No	Reassemble or replace the paper delivery actuator and regist sensor actuator.
Paper delivery sensor Regist sensor	2	Does the voltage of P2-1 in the fixing PCB connector rise from 0V to 5V when the eject sensor is covered, or the voltage of P5-5 in the paper feeder PCB connector rise from 0V to 5V when the registration sensor is covered?	No	Replace the fixing PCB assy or the paper feed/size-sw PCB assy.
Fuser harness Feed flat cable	3	Does the voltage of P11-1 in the main PCB connector rise from 0V to 5V when the eject sensor is covered, or the voltage of P3-5 in the main PCB connector rise from 0V to 5V?	No	Replace the fuser harness or the feed flat cable.
			Yes	Replace the main PCB assy.

M-11	"54 MOTOR MALF" is displayed (The main motor rotation disabled)

Possible cause	Step	Check	Result	Remedy
Low-voltage power supply PCB LV harness Main PCB	1	Is the voltage of P7-1 in the main PCB connector +24V?	No	Replace the main PCB assy low-voltage power supply PCB assy, or the LV harness.
DC motor harness DC motor assy.	2	Does the voltage of P7-4 in the main PCB connector drop from 5V to 0V after dropping the voltage of P7-3 from 5V to 0V?	No	Replace the main PCB assy.
			Yes	Replace the DC motor harness or the DC motor assy.

M-12	No paper pick-up from cassette (or MP tray)

Possible cause	Step	Check	Result	Remedy
Mis-operation	1	Is the paper feed mode set correctly?	No	Set paper feed mode correctly.
Main PCB	2	Does the voltage of P3-20 (or 19) in the main PCB connector rise from 0V to 5V and is a pulses having about 11ms period generated at P3-6, 7, 8 ,9 pin?	No	Replace the main PCB assy.
Feed flat cable	3	Does the voltage of P5-20 (or 19) in the paper feeder PCB. Connector rise from 0V to 5V and is the pulses having about 11ms period generated at P3-6, 7, 8 ,9 pin?	No	Replace the feed flat cable.
Paper feeder PCB	4	Does the voltage of P3-1 (or P4-1) in the paper feeder PCB connector drop from 24V to 0V and is the chopping pulses generated at P1-1, 2, 5 ,6 pin?	No	Replace the Paper feed/size-SW PCB assy.
Pick-up(or MP Pick) solenoid	5	Does the pick-up (or MP Pick) solenoid operate?	No	Replace the pick-up (or MP Pick) solenoid.
Paper feed motor	6	Does the pick-up motor rotate?	No	Replace the paper feed motor assy.

M-13	"55 HIGH VOL MALF" is displayed (Faulty output from the H.V.P.S. ASSY)

Possible cause	Step	Check	Result	Remedy
Main PCB	1	When a test print is carried out, is the voltage of the each pin in the main PCB connector P6 turned on and off as the below list?	No	Replace the main PCB assy.
HV harness High-voltage power supply PCB	2	Is the voltage of the each pin of the high-voltage power supply PCB connector P4 turned on and off?	No	Replace the HV harness.
			Yes	Replace the high-voltage power supply PCB assy.

Pin No.	Signal name	Voltage (reference value)	Remarks
①	/HV1AC	0V 5.8V	
②	/HV1DC	0V 8.6V	
③	/DBAC	0V 6.3V	
④	/DBDC	0V 8.6V	
⑤	DNSTY	1.0 ~ 4.0V	Default: 2.5V
⑥	/HVT1	0V 8.7V	
⑦	/HVT2	0V 15.1V	
⑧	/HVT3	0V 9.0V	
⑨	HVT4	0.4 ~ 5.0V	
⑩	HVTFB	0.4 ~ 4.0V	
⑪	TONER1	0.0 ~ 3.5V	
⑫	0V	0V	
⑬	TONER2	2.0 ~ 4.5V	
⑭	24VRET	0V	
⑮	5V	5V	
⑯	24V	24V	

M-14	"50 FUSER MALF" is displayed

Possible cause	Step	Check	Result	Remedy
Thermal fuse	1	Is the thermal fuse located in the fixing unit conductive?	No	Replace the fixing unit.
Thermistor	2	Remove the fixing unit from the printer and measure the resistance between two pins of the 2 pin connector on the fixing PCB. Is the measured resistance within the range of 1.0 MΩ – 1.6MΩ (normal temperature)?	No	Replace the fixing unit.
Fixing heat roller	3	Is the fixing heat roller located in the fixing unit conductive?	No	Replace the fixing heat roller.
Low-voltage power supply PCB	4	When the power is switched on, does the voltage at connector pin P4-1 on the main PCB go from 5V to 0V?	Yes	Replace the low-voltage power supply PCB assy.
Main PCB	5	Make sure if: The EP-ED cartridge is installed in the printer correctly. The upper cover of the printer is closed. A paper-loaded cassette is mounted.	No	Replace the main PCB assy.

Note: When the printer has detected a fixing unit malfunction, do not power on for about 15 minutes.

Even if the power is on, the printer will shut off the power supply to the fixing heat roller to prevent the fixing the unit from overheating.

M-15	"51 LASER BD MALF" is displayed

Possible cause	Step	Check	Result	Remedy
Main PCB Scanner harness	1	Is the problem remedied when the power off and on again?	No	Replace the main PCB assy , the Polygon harness 5P,SCN flat cable 6P or the scanner unit.

M-16	"52 SCANNER MALF" is displayed

Possible cause	Step	Check	Result	Remedy
Main PCB Scanner harness Scanner unit	1	Is the problem remedied when the power off and on again?	No	Replace the main PCB assy, the Polygon harness 5P, SCN flat cable 6P or the scanner unit.

M-17	"41 PRINT CHECK" is displayed

Possible cause	Step	Check	Result	Remedy
Main PCB	1	Does this problem frequently occur?	No	Since this is a temporary problem, remove the paper used when the error occurred and continue to print.
			Yes	Replace the main PCB assy.

7. STATUS MESSAGE LIST

Table 6.1 Operator Call Messages

Operator Call Message	Meaning	Action
CHECK XX TRAY	The paper cassette (XX is MP/T1/T2) is out of paper.	Load a stack of paper into the cassette. See M-7.
12 COVER OPEN	The upper cover of the printer is open.	Close the cover. See M-6.
13 JAM XXXXXX	Paper is jammed in the printer. XXXXXX is TRAYS/ INSIDE/REAR/DUPLEX.	Remove the jammed paper from the indicated area. See M-10.
14 NO CARTRIDGE	The toner cartridge is not installed in the printer.	Install a toner cartridge. See M-8.
XX NO CASSETTE	The paper cassette is not installed. XX is T1/T2.	Install the paper cassette.
16 TONER EMPTY	The printer has almost run out of toner: you may print another 30 to 100 pages. (The ALARM lamp lights at the same time.)	Remove the toner cartridge, rock it several times at 45°, and install it again. Or replace the toner cartridge with a new one. See M-9.
XX LOAD PAPER ***** SIZE	The wrong size of paper was loaded in the paper cassette XX. XX is MP/ T1/T2. (The message appears alternately to show a particular size.)	Load the requested size of paper in the paper cassette, or load it on the manual feed tray and press the FORM FEED switch.
18 MANUAL FEED ***** SIZE	The printer requests you to load paper manually. (The message appears alternately to show a particular size.)	Load the requested size of paper on the multi-purpose tray and press the SEL switch.
19 CHECK FONT	An error occurred in the optional font cartridge/card.	Turn off the printer, and reinstall or replace the optional font cartridge/card.
20 FONT REMOVAL	The font cartridge/card was removed while the printer is on-line.	Turn off the printer, install the font cartridge/card, and turn on the printer. The CONTINUE switch will allow you to temporarily ignore this message.
27 NO DX UNIT	The duplex unit is not installed with the printer when the duplex printing mode is selected.	Install the duplex unit correctly.See the DX-1200 /DX-1600 user's guides.
27 NO DX TRAY	The duplex paper guide tray is not installed in T1 when the duplex printing mode is selected.	Install the duplex paper guide tray into T1. See the DX-1200 /DX-1600 user's guides.
27 DX OPEN	The cover of the duplex unit is open.	Close the cover. See the DX-1200/DX-1600 user's guides.

Table 6.2 Error Messages

Error Message	Meaning	Action
31 PRINT OVERRUN	Print overrun	Press the CONTINUE switch to start printing the next page. Data which overran the print area on the page cannot be printed. Check your page protection setting with the MODE switch. Setting page protection to the correct size could solve this problem. If printing at 600 dpi, you may need to add optional SIMM memory.
32 BUFFER ERROR	Input buffer overflow	Press the CONTINUE switch to resume printing. Data lost in overflow cannot be printed.
34 MEMORY FULL	Work memory overflow	Press the CONTINUE switch to resume printing. If the same error should occur after you press the CONTINUE switch, turn off the printer. Wait a few seconds, then turn it on again . Reduce the input buffer size. Turn off ”KEEP PCL.” Add SIMM memory with power off. Download font and the font saved in the HDD card might cause the error, for it occupies the same work area as the RAM. Memory expansion is recommended in that case.
40 LINE ERROR	Error in the communications circuit	When the serial interface is used, check the communications parameters such as baud rate, code type, parity, and handshake protocols. When the parallel interface is used, check the interface cable connection.
41 PRINT CHECK	Error in communication with the engine controller	Turn off the printer. Wait a few seconds, then turn it on again. See M-17.

Error Message	Meaning	Action
42 CARD FULL	Card overflow	Delete unnecessary macros or fonts, or use a new card.
43 CARD W ERR	Card write error	Set the write protect switch of the card to OFF if it has been set to ON. Use a new card. If the same error occurs, consult your dealer or service personal.
44 SIMM ERROR	Incorrect installation of SIMMs	Install SIMMs correctly, referring to the printed error message.
45 MIO ERROR	Error in communication with the MIO card.	Install the MIO card correctly.
46 OPT IO ERROR	Connection error with optional feeders and duplex unit.	Check the interface cable connection between the printer and the fitted option.
47 CARD R ERROR	Card read error	Use a new card, If the same error occurs, consult your dealer or service personal.
XX SIZE ERROR	Paper of incorrect size is loaded into XX. XX is T2/ DX.	Set the correct size of paper in T2 or for duplex printing.
IGNORE DATA (BR- Script 2 mode only)	Data is ignored because of an error in the Post Script program.	Press the RESET switch.
(*HL-1660 ONLY)		
48 INCORRECT LT	Equipping LT for 1260/e	Use LT for HL-1660
49 INCORRECT DX	Equipping DX for 1260/e	Use DX for HL-1660

Table 6.3 Service Call Messages

Service Call Message	Meaning	Action
50 FUSER MALF	Malfunction of fuser	Turn off the printer. Wait 15 minutes, then turn it on again. See M-14.
51 LASER BD MALF	Malfunction of laser beam detector	Turn off the printer. Wait a few seconds, then turn it on again. See M-15.
52 SCANNER MALF	Malfunction of laser scanner motor	Turn off the printer. Wait a few seconds, then turn it on again. See M-16.
53 DX FAN MALF	Malfunction of fan motor in the duplex unit.	Turn off the printer. Wait a few seconds, then turn it on again.
54 MOTOR MALF	Malfunction of main motor	Turn off the printer. Wait a few seconds, then turn it on again. See M-11.
55 HIGH VOL MALF	Malfunction of high-voltage power supply	Turn off the printer. Wait a few seconds, then turn it on again. See M-13.
61 PROG ERROR	Program ROM checksum error	Turn off the printer. Wait a few seconds, then turn it on again.
62 FONT ERROR	Font ROM checksum error	Turn off the printer. Wait a few seconds, then turn it on again.
63 D-RAM ERROR	D-RAM error	Turn off the printer. Wait a few seconds, then turn it on again.
66 NV-W ERROR	NV-RAM error	Turn off the printer. Wait a few seconds, then turn it on again.
67 NV-R ERROR	NV-RAM error	Turn off the printer. Wait a few seconds, then turn it on again.
68 NV-B ERROR	NV-RAM error	Turn off the printer. Wait a few seconds, then turn it on again.
60 SYSTEM ERROR XXXXX	Error in XXXXX.	Turn off the printer. Wait a few seconds, then turn it on again.
99 SERVICE 1	Fatal Error Exp.	Turn off the printer. Wait a few seconds, then turn it on again. If it's still displayed on the LCD, replace the Main PCB.

Service Call Message	Meaning	Action
99 SERVICE 2	Address Error (L)	Turn off the printer. Wait a few seconds, then turn it on again. If it's still displayed on the LCD, replace the Main PCB.
99 SERVICE 3	Address Error (S)	Turn off the printer. Wait a few seconds, then turn it on again. If it's still displayed on the LCD, replace the Main PCB.
99 SERVICE 4	Bus (I) Error	Turn off the printer. Wait a few seconds, then turn it on again. If it's still displayed on the LCD, replace the Main PCB.
99 SERVICE 5	Bus (D) Error	Turn off the printer. Wait a few seconds, then turn it on again. If it's still displayed on the LCD, replace the Main PCB.
99 SERVICE 6	Syscall Exp.	Turn off the printer. Wait a few seconds, then turn it on again. If it's still displayed on the LCD, replace the Main PCB.
99 SERVICE 7	Breakpoint Exp.	Turn off the printer. Wait a few seconds, then turn it on again. If it's still displayed on the LCD, replace the Main PCB.
99 SERVICE 8	Reserved Ins.	Turn off the printer. Wait a few seconds, then turn it on again. If it's still displayed on the LCD, replace the Main PCB.
99 SERVICE 9	Copro. Unusable	Turn off the printer. Wait a few seconds, then turn it on again. If it's still displayed on the LCD, replace the Main PCB.
99 SERVICE 10	Overflow Exp.	Turn off the printer. Wait a few seconds, then turn it on again. If it's still displayed on the LCD, replace the Main PCB.
99 SERVICE 11	Undefined Intrpt	Turn off the printer. Wait a few seconds, then turn it on again. If it's still displayed on the LCD, replace the Main PCB.

Service Call Message	Meaning	Action
99 SERVICE 12	Software1 Trap	Turn off the printer. Wait a few seconds, then turn it on again. If it's still displayed on the LCD, replace the Main PCB.
99 SERVICE 13	Software2 Trap	Turn off the printer. Wait a few seconds, then turn it on again. If it's still displayed on the LCD, replace the Main PCB.

* "L" means "Long".
* "S" means "Short".
* "I" means "Instruction".
* "D" means "Data".

Note: When the service error reads on the LCD, it means that there is an CPU error. The possible cause is an hardware failure of the CPU or a program's bug, which caused CPU error in correspondence.

Appendix 1. Engine Block Diagram

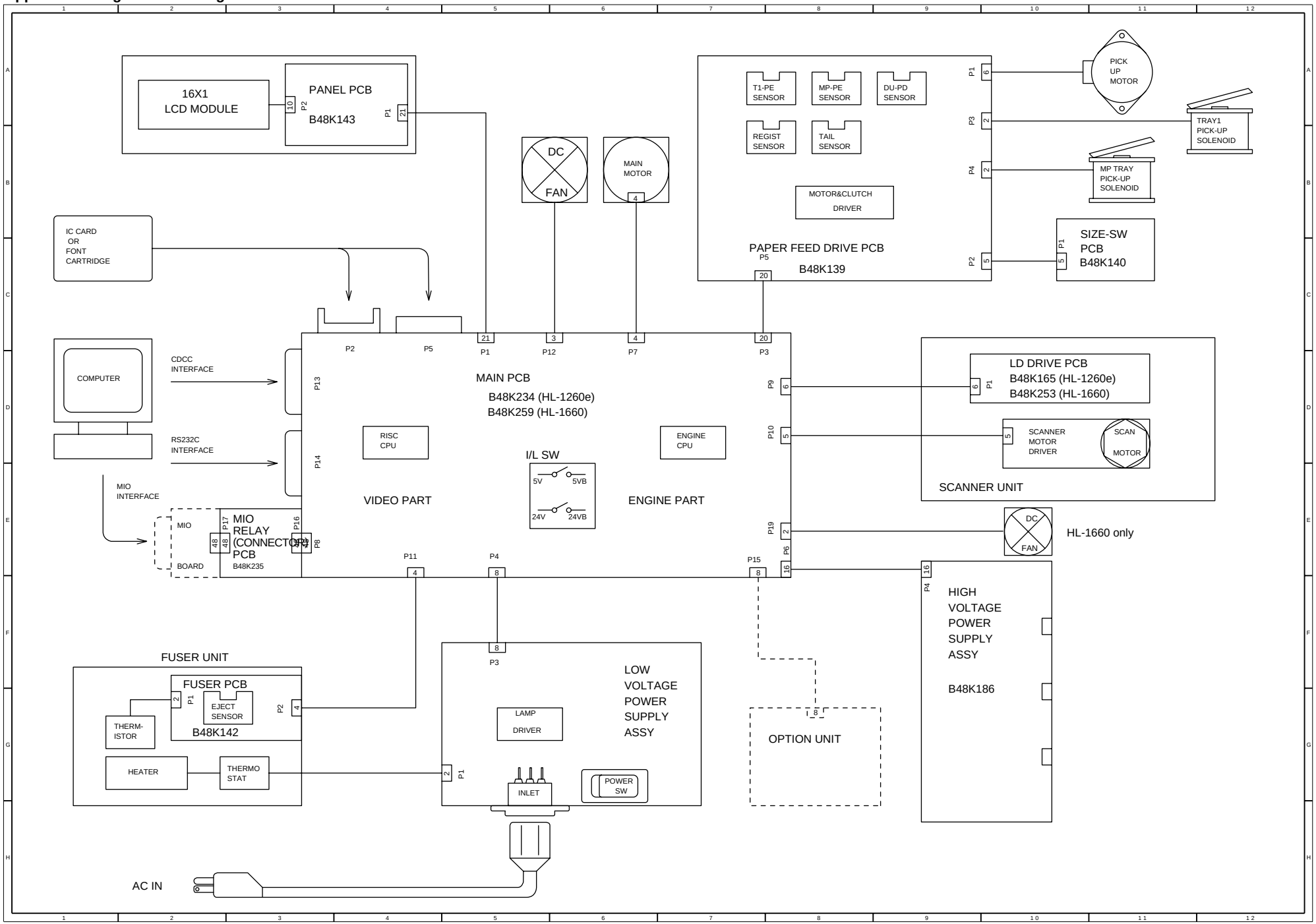

Appendix 3. Main PCB Circuitry Diagram (1/7)

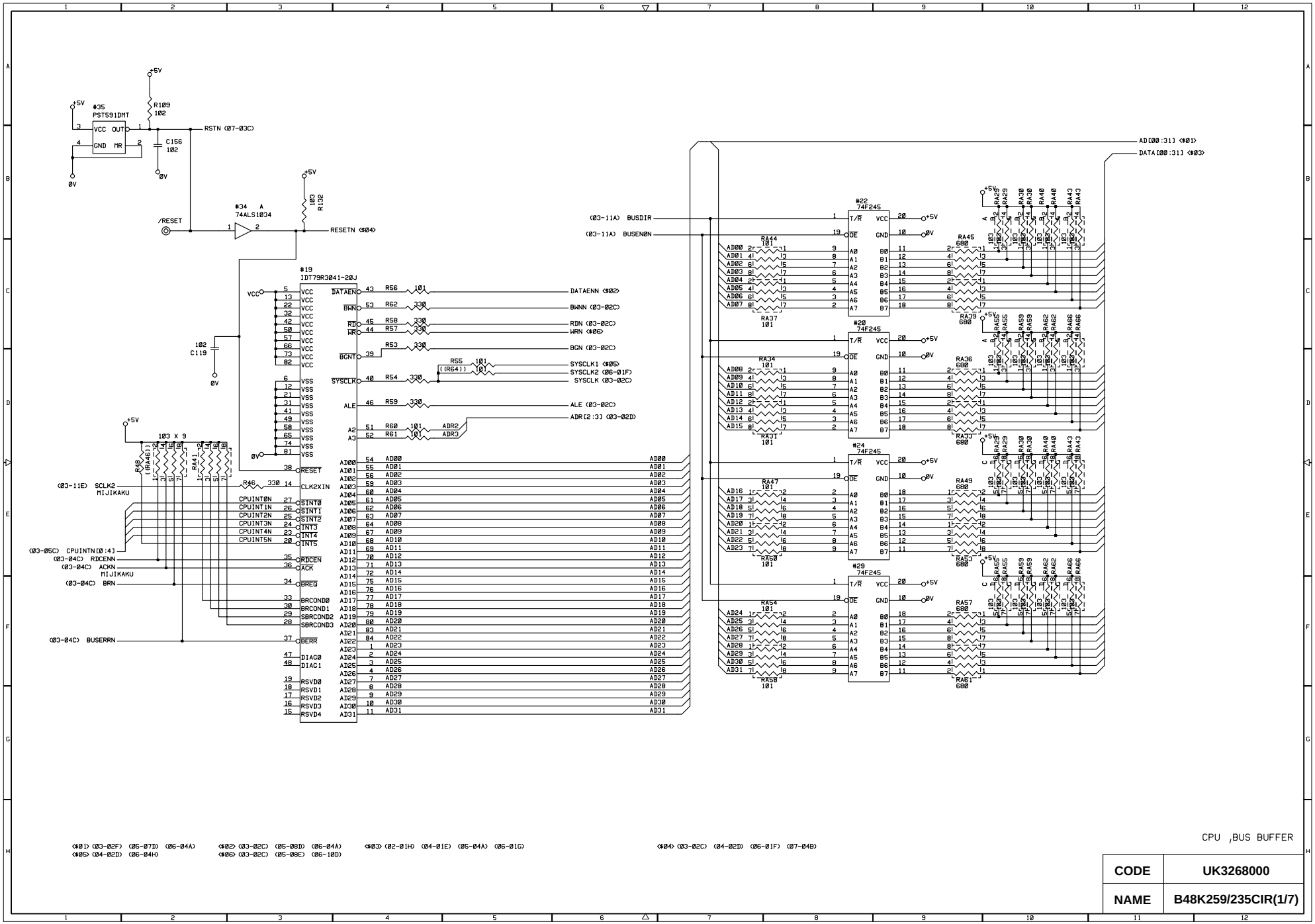

(S01) (03-02F) (05-07D) (06-04A)
(S05) (04-02D) (06-04H)
(S02) (03-02C) (05-08D) (06-04A)
(S06) (03-02C) (05-08E) (06-10D)
(S03) (02-01H) (04-01E) (05-04A) (06-01G)
(S04) (03-02C) (04-02D) (06-01F) (07-04B)

CODE	UK3268000
NAME	B48K259/235CIR(1/7)

Appendix 4. Main PCB Circuitry Diagram (2/7)

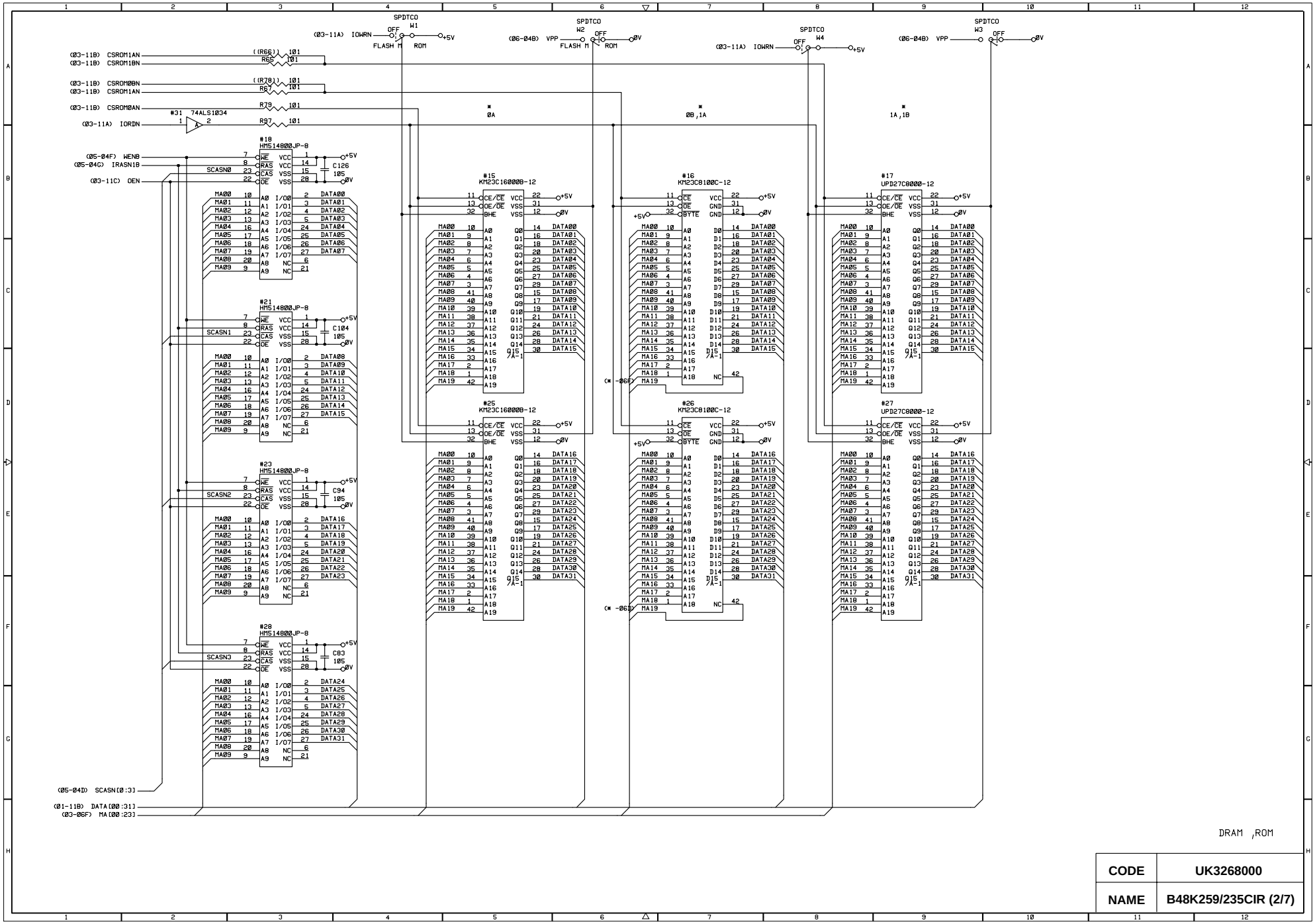

CODE	UK3268000
NAME	B48K259/235CIR (2/7)

Appendix 5. Main PCB Circuitry Diagram (3/7)

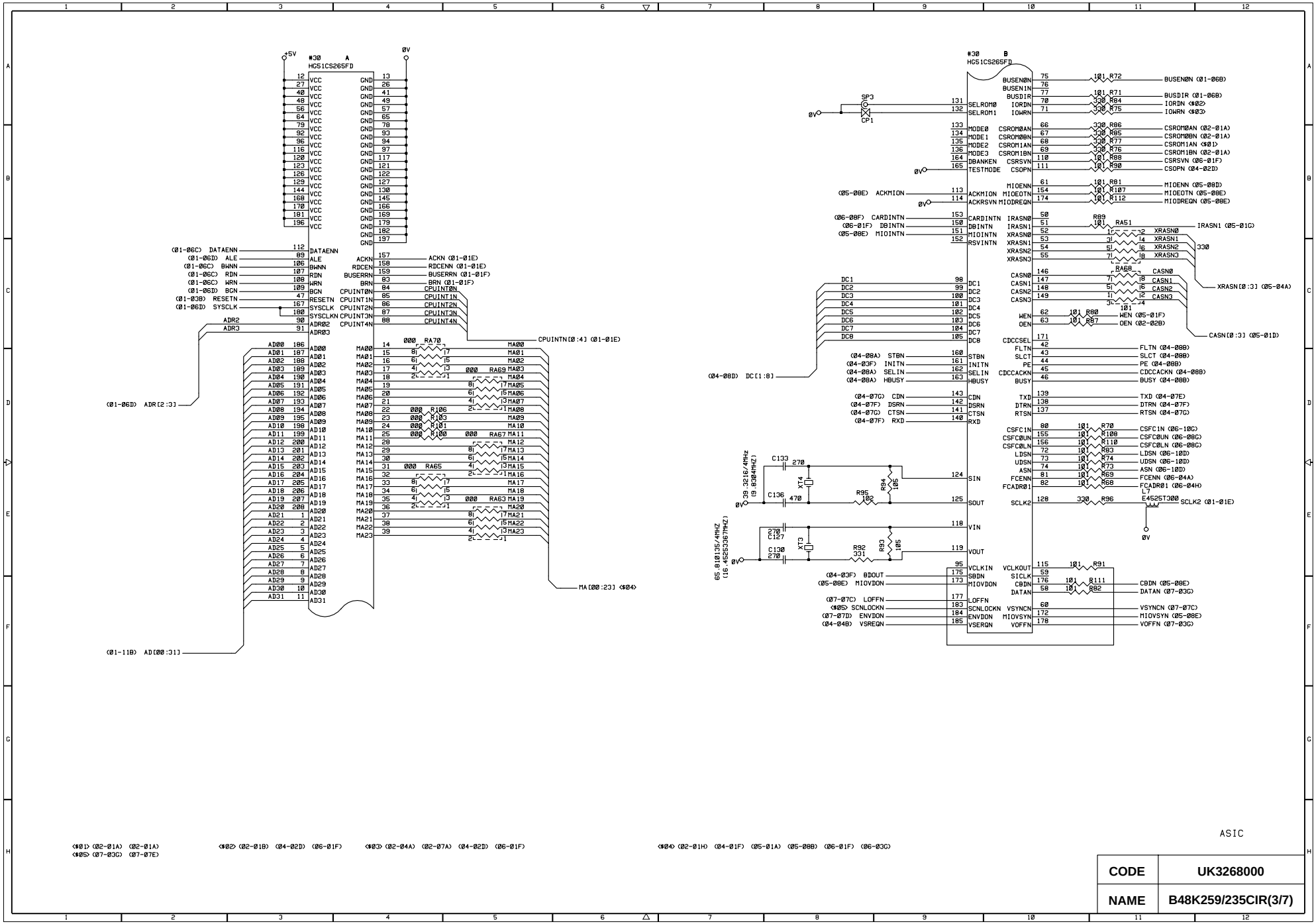

Appendix 6. Main PCB Circuitry Diagram (4/7)

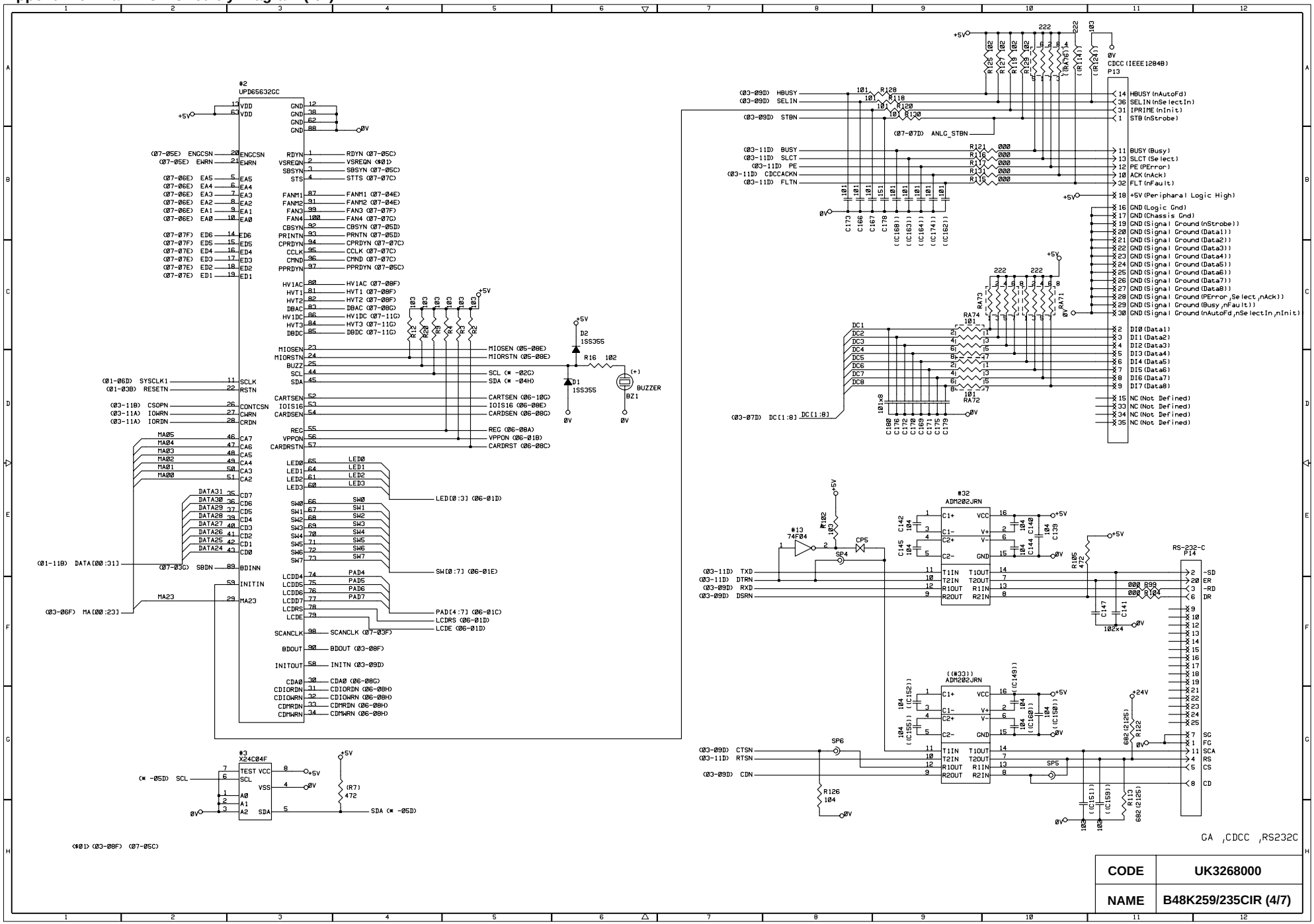

CODE	UK3268000
NAME	B48K259/235CIR (4/7)

Appendix 7. Main PCB Circuitry Diagram (5/7)

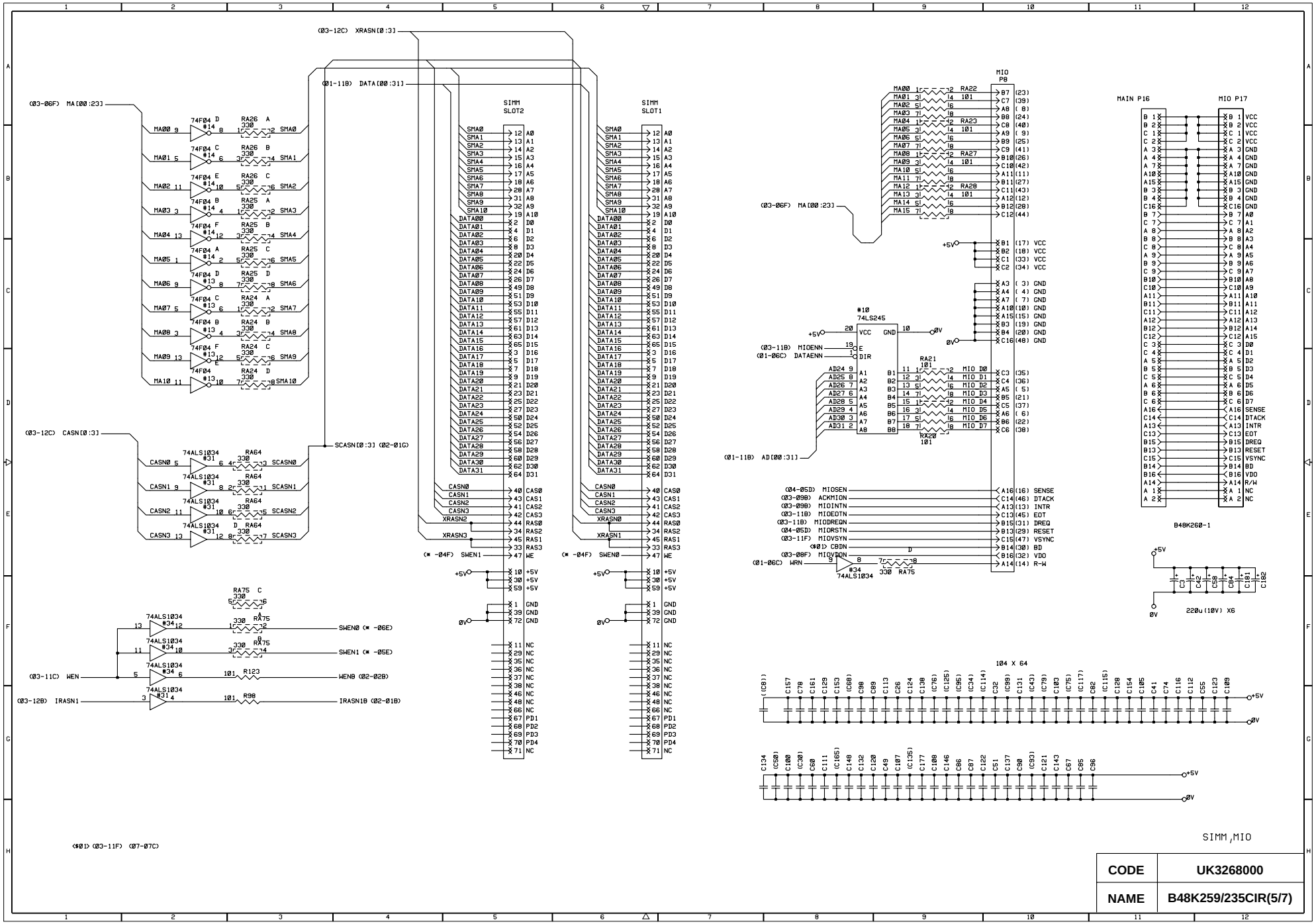

Appendix 8. Main PCB Circuitry Diagram (6/7)

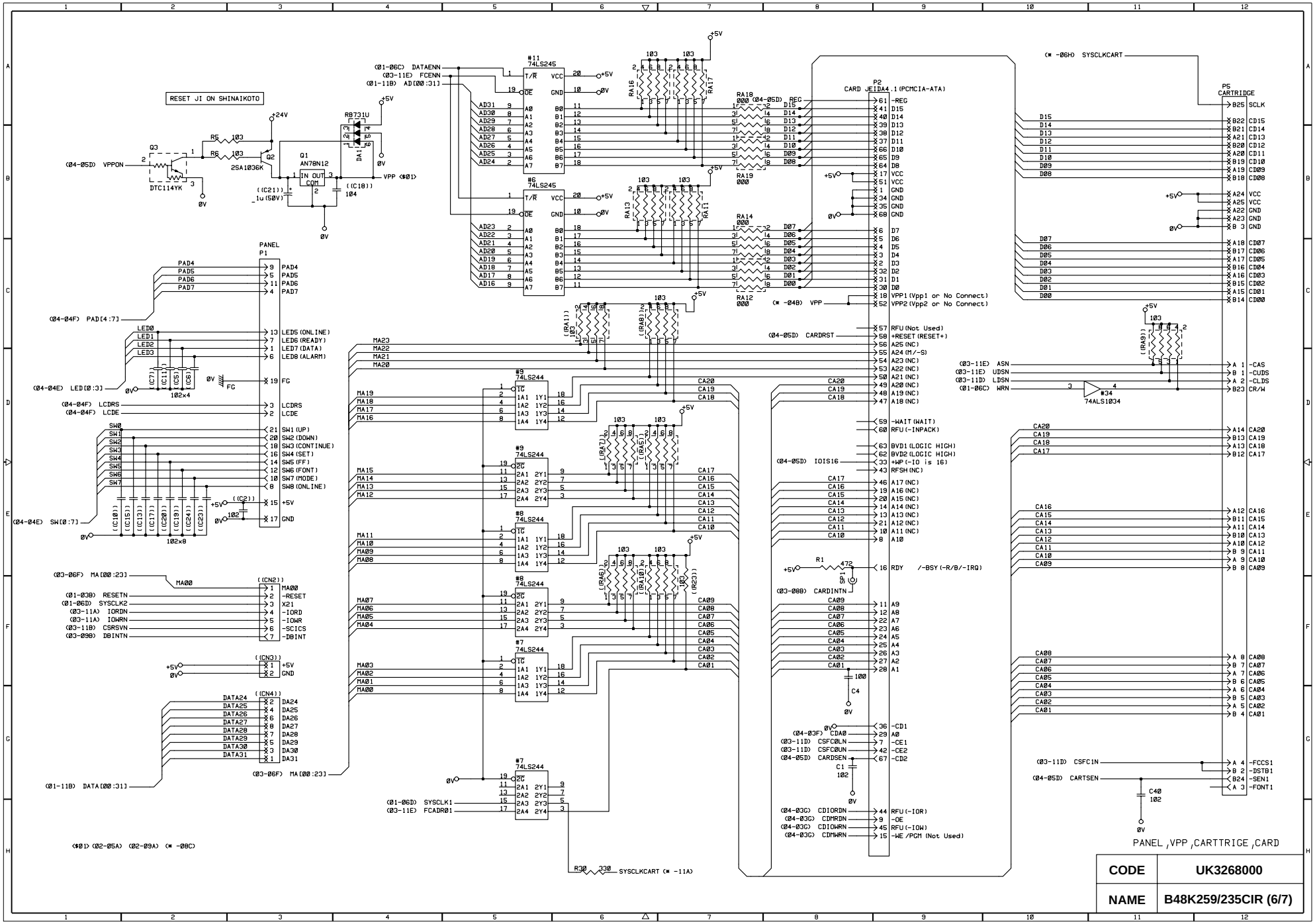

Appendix 9. Main PCB Circuitry Diagram (7/7)

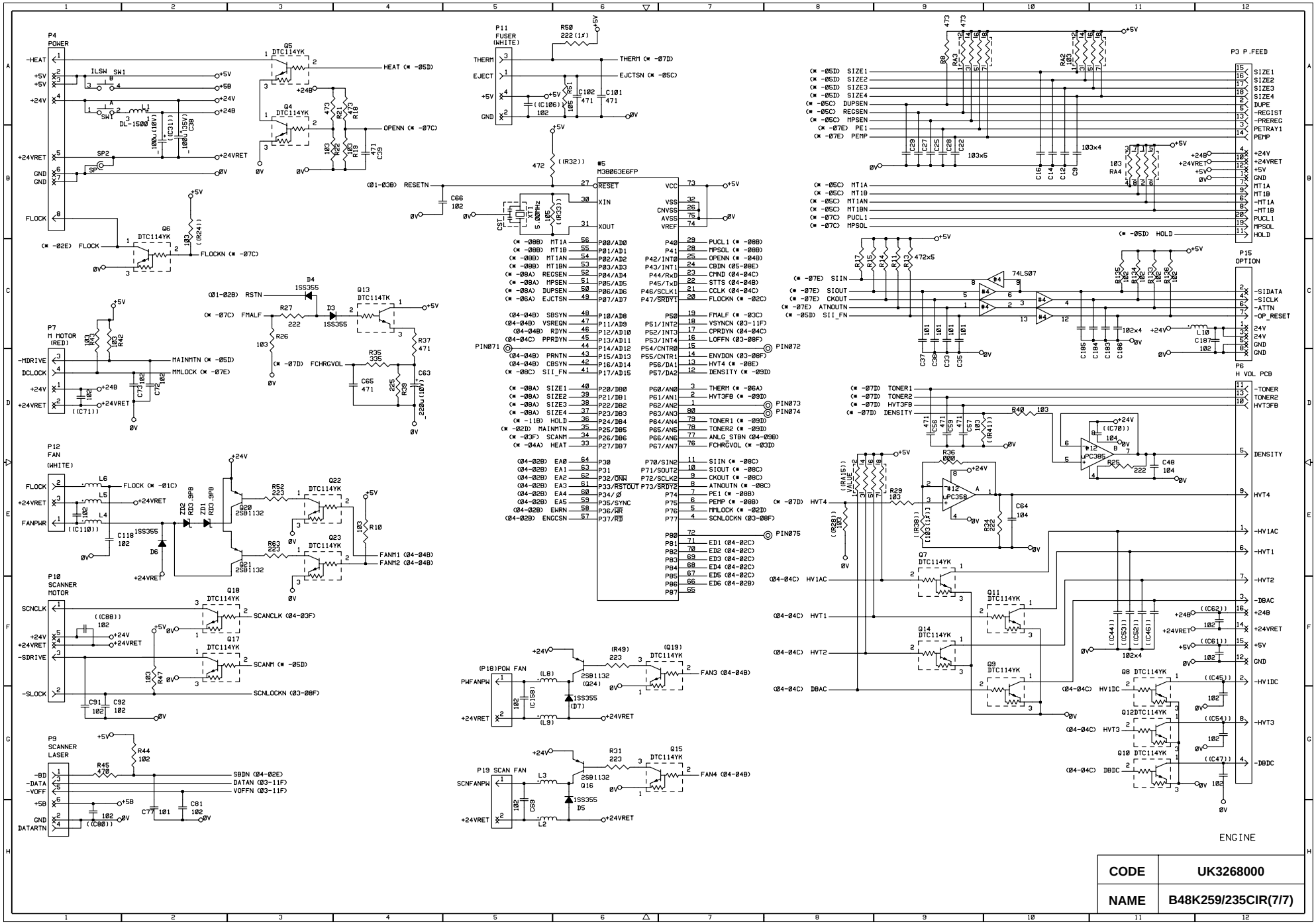

CODE	UK3268000
NAME	B48K259/235CIR(7/7)

Appendix 11. Scanner LD PCB Circuitry Diagram (1/1)

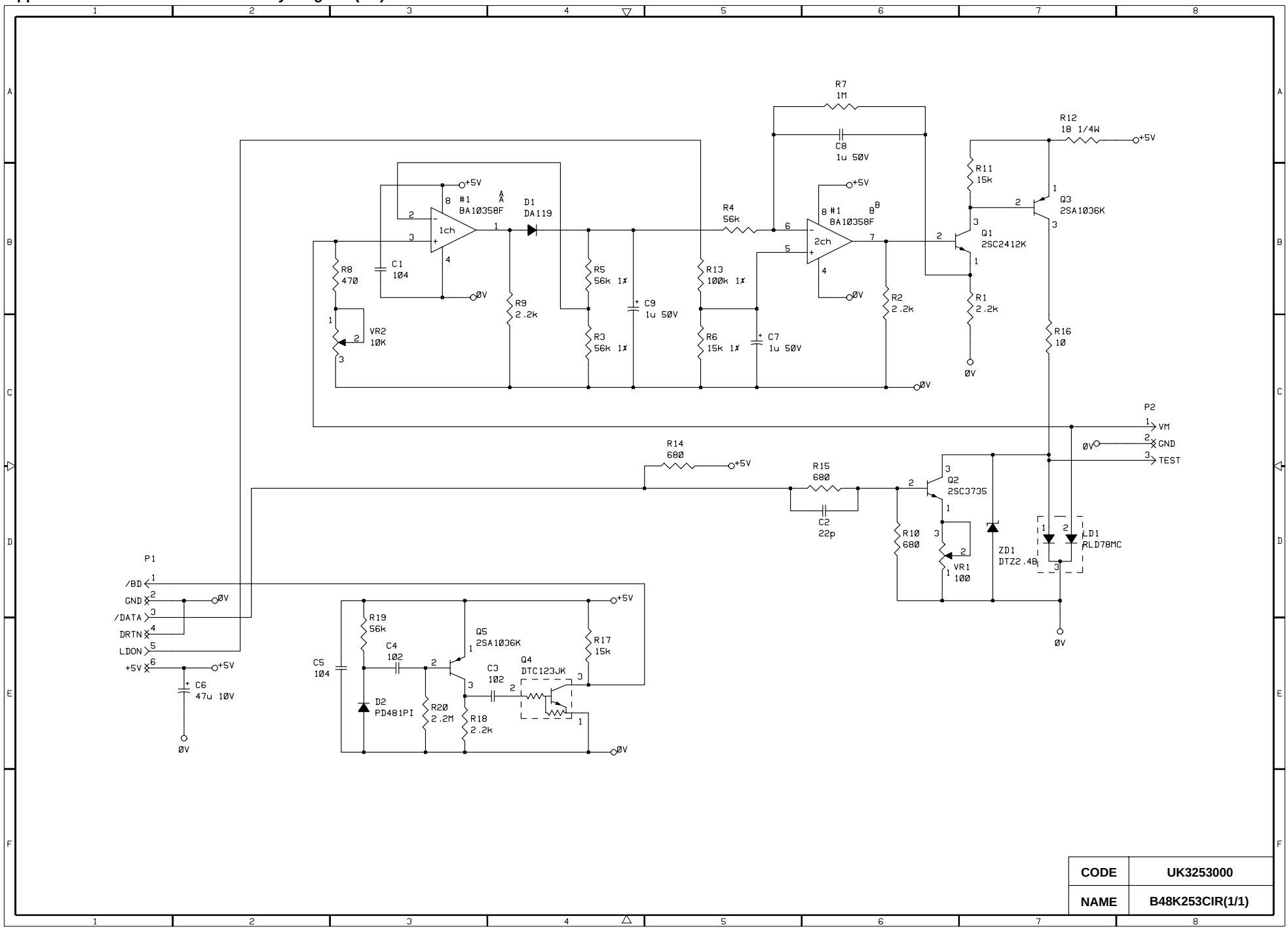

CODE	UK3253000
NAME	B48K253CIR(1/1)