Table of Contents

1. Meet the HP 2635A Printing Terminal 1

2. Some Useful Information 2
   - Options 2
   - Supplies and Accessories 2
   - Specifications 3
   - Service 3
   - Operator Safety 3

3. Preparing Your Terminal for Use 4
   - Environment 4
   - Unpacking and Inspection 4
   - Power 4
   - Stand Assembly 5
   - Installation 5
   - Ribbon Cartridge Loading and Removal 6
   - Paper Loading 7
   - Self Test 8

4. Operating Your Terminal 9
   - Operator Controls and Indicators 9
   - Keyboard 11
   - Power On and Reset 12
   - On Line/Off Line 12
   - Print Mode Selection 12
   - Vertical Line Spacing 12
   - Horizontal Tabs 12
   - Display Functions 12
   - Paper Out 12
   - Power Failure 12

5. Operator Maintenance 13
   - Preventive Maintenance 13
   - Print Head Cleaning, Replacement and Adjustment 13
   - In Case of Difficulty 14

6. Control Code Reference Data 15
   - Control Codes 15
   - Escape Sequences 15
     - Self Test 16
     - Status Read Back 16
     - Reset 16
     - On/Off Line 16
     - Display Functions 16
     - Horizontal Tab 16
     - Character Set Selection 16
     - Print Mode Selection 16
     - Vertical Forms Control 17
     - Underlining 17
     - Examples 19

7. Appendix A. Status Read Back 20

8. Appendix B. Control Code Reference Table 23

9. Appendix C. ASCII Tables 24

Operating Summary

Page No.

- LOAD RIBBON 6
- LOAD PAPER 7
- SET TOP-OF-FORM 7
- TURN POWER ON 12
- SELECT PRINT MODE 12
- SELECT VERTICAL LINE SPACING 12
- PUT PRINTER ON-LINE 12

Copyright © 1977 by Hewlett-Packard Company

HP Computer Museum
www.hpmuseum.net

For research and education purposes only.

Meet the HP 2635A Printing Terminal

02635-77033-001

Your HP 2635A Printing Terminal is designed to be trouble free and easy to operate while offering optimum flexibility. Features which make this possible are:

- Smart, Bi-Birectional Printing — not only does this terminal print bi-directionally, but it constantly evaluates incoming data to determine which print direction is the most efficient for the next line.
- Blank Space Detection — detects and skips at high speed 10 or more sequential spaces in a line. This optimizes printing of columnar data.
- Compressed, Normal, and Expanded Print Modes with Underlining — these print modes are selectable via control codes embedded in the data. For added emphasis, any portion of the printed data can be underlined as it is printed.
- Operator Convenience — easy-to-load no-mess ribbon cartridge, easily-replaceable print head, conveniently located controls.
- Vertical Line Spacing Control — via embedded control codes, vertical line spacing can be varied when you want it. An 8-channel VFC allows vertical indexing of 11-inch forms.

These features and more packaged as an HP 2635A Printing Terminal provide an investment in flexible, usable, and low cost printing terminal capability. The remainder of this manual is intended to help you make the most of this investment.

Some Useful Information 2

OPTIONS

The HP 2635A Terminal is available in different configurations to match your applications and needs. These configurations are stated as options — three digit suffixes to the model number. These option numbers are marked on the serial tag fastened to the back of the terminal.

The standard HP 2635A is a 180 character per second printing terminal that features high-resolution dot matrix printing, a 128 USASCII character set, and an 8-channel fixed Vertical Format Control for an 11-inch page. It comes equipped with a power cord, one ribbon cartridge (P/N 02631-60060), one print head cleaning brush (P/N 8520-0015), and one hex key (P/N 8710-1181) which is used for print head cleaning and replacement. The standard interface is an EIA Standard RS232C asynchronous interface without modem control and is compatible with Bell 103 and Bell 202 type modems. The interface cable connector is similar to Cinch DBM, 25 position D-subminiature. A female connector is optional.

Following is a list of available options for the HP 2635A Printing Terminal.

OPTION 041

RS232C interface with modem control.

OPTION 042

20 milliamp current loop interface. Particularly useful in electrically noisy environment. Connector; screw type connector strip.

OPTION 046

Hewlett-Packard Interface Bus (HP-IB). Signal characteristics meet IEEE 488-1975. Connector; Amphenol 57 series, 24 position, receptacle.

OPTION 715

Adds HP 2635A Service Manual (P/N 20635-90902).

SUPPLIES AND ACCESSORIES

Supplies and accessories recommended for use with your terminal and available from Hewlett-Packard are listed below:

TERMINAL STAND

Model No. 26097A Terminal Stand.

RIBBON CARTRIDGE

P/N 02631-60060 (package of one)

REPLACEMENT PRINT HEAD

P/N 0950-1576 (package of one)

PRINT HEAD MAINTENANCE BRUSH

P/N 8520-0015 (package of one)

HEX KEY (for print head removal and replacement)

P/N 8710-1181 (package of one)

PAPER

The following are just a few commonly used papers. Others are available from HP and custom forms are available from paper suppliers. When designing custom forms, refer to the paper specifications in this manual. All listed forms measure 11 inches x 14.87 inches.

P/N	DESCRIPTION	QUANTITY
9320-0331	one-part, white	one box, 3000 sheets
9320-1659	one part, green bar	one box, 3000 sheets
9320-2417	two-part, green bar	one box, 1500 sheets
9320-2419	four-part, green bar	one box, 800 sheets

SPECIFICATIONS

SAFETY COMPLIANCE

The HP 2635A is listed by Underwriter's Laboratories, Inc. in the following categories with respective guide designations; Electronic Data Processing Equipment (EMRT), Teaching and Instruction Equipment (WYFW), Office Appliances and Business Equipment (QAOT).

The Canadian Standards Association has certified this terminal as Data Processing Equipment.

Finally, this terminal was designed to meet most European Safety and RFI/EMC standards for Electronic Data Processing equipment effective prior to 1 September 1977. Any questions concerning regulatory agency compliance should be directed to the local Hewlett-Packard sales office.

PHYSICAL

Width:	640 mm (25.2 inches)
Depth:	470.4 mm (18.5 inches)
Height:	215.7 mm (8.5 inches)
Weight	
Terminal:	26 kg (57 pounds)
Stand Assembly:	24 kg (53 pounds)

CLEARANCE REQUIREMENTS

Front and Rear:	Adequate for operator access
Side:	76 mm (3 inches)

PERFORMANCE

Character Formation:	Dot Matrix (7x9)
Print Direction:	Bi-Directional (left-to-right and right-to-left)
Print Speed:	180 characters per second
Line Feed Rate	
6 LPI:	30 msec/line
8 LPI:	24 msec/line
Form Feed Rate	
6/8 LPI:	176.6 mm/sec (6.95 in/sec)
Line Length:	Up to 136 characters in Normal Mode (10 cpi)
Print Modes:	Normal (10 cpi), Expanded (5 cpi), Compressed (16.7 cpi)
Copies:	1 - 6 (up to 0.43 mm (0.017 inches) pack thickness)

VERTICAL FORMAT CONTROL

Number of Channels:	8 Pre-programmed. For use with 11-inch page only.

PAPER

The HP 2635A will accommodate edge perforated forms varying in width from 400 mm (15.75 inches) edge-to-edge to 31 mm (1.22 inches) perforation-to-perforation. It will accommodate forms thickness variations between 0.08 mm (0.003 inches) and 0.43 mm (0.017 inches). Forms thicker than 0.43 mm may not print successfuly. The bottom paper feed slot is recommended for use with multi-part forms to minimize possible forms separation and binding. Multi-part forms and card stock should be tried for satisfactory feeding, registration, and print quality.

ELECTRICAL CHARACTERISTICS

	INPUT (VAC)	RANGE (V)	FREQUENCY TOLERANCE (HZ)
Voltage Source (Selectable)	100	88-110	48-62
	120	105-132	48-62
	220	194-242	48-62
	240	212-264	48-62

Power Cable Length:	1.8 metres (6 feet)
Power Consumption:	265 VA maximum

ENVIRONMENTAL

Temperature	
Operating:	0 to 55 degrees C (32 to 131 degrees F)
Non-Operating:	–40 to 75 degrees C (–40 to 167 degrees F)
Relative Humidity:	5% to 95% non-condensing

SERVICE

Hewlett-Packard offers both service contracts and "time and material" service for the HP 2635A Printing Terminal. HP Sales and Service Offices are listed at the back of this manual. If you have a need for service or questions regarding service, contact the office nearest you.

OPERATOR SAFETY

Close the access cover when the terminal is in a ready-to-operate condition and when it is operating. Keep hands, long hair, and articles of clothing such as long sleeves and necklaces out of the terminal when ready-to-operate and operating conditions exist.

Preparing Your Terminal for Use 3

The following procedures should be followed closely so that your terminal will perform with maximum efficiency.

ENVIRONMENT

Choose a clean, traffic free environment for locating your terminal, preferably an area not subjected to excessive shocks, vibrations, or wide ranges of ambient temperature. Under no circumstances should the environmental specifications be exceeded.

The location must provide adequate operator access to both the front and rear of the terminal. A minimum of 76 mm (3 inches) is necessary on each side of the cabinet to allow adequate air-flow for cooling.

UNPACKING AND INSPECTION

Inspect the unit for signs of physical damage (cracks, broken parts, etc.). If the terminal appears to have been damaged in shipment, notify the carrier and your HP Sales and Service Office immediately. An HP representative will arrange for repair or replacement of the damaged unit.

Do not destroy the shipping container and packing material. They will be required in case of a damage claim, and will be needed for reshipment of the terminal if it should be necessary to return the terminal to the factory.

Remove the terminal from the shipping carton and the packing material. There are no retainers or packing material inside of the terminal.

After you have completed unpacking your terminal, check all shipping documents and the identification tag on the back of the terminal to make certain that the terminal conforms to your purchase specifications.

If, for any reason, it becomes necessary to reship your terminal, use the original packing material and shipping carton.

POWER

The HP 2635A has a maximum power requirement of 265 VA. One of the following power sources must be available for operating the terminal: 100, 120, 220, or 240 volts ac. Your terminal has been shipped to match the power available at your location.

If it is necessary to change main line fuse, perform the following steps:

a. Remove the power cable from the terminal.

b. The power cord receptacle contains the fuse. Uncover the fuse by sliding the cover over the power cable connection.

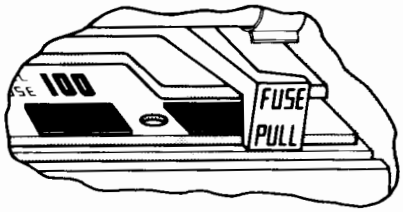

c. Pull the fuse release lever and remove the fuse.

d. Reseat the fuse release lever.

e. Insert a new 2.5 amp SB fuse.

f. Slide the fuse cover back over the fuse and reconnect the power cable.

The power cord plug should always be connected to a grounded outlet. Do not use an ungrounded adapter to connect the power cord to a two-wire outlet. If the power cable ground is bypassed, static electricity problems could develop within the printer and cause adverse operating conditions.

STAND ASSEMBLY

Because the most efficent paper feed is through the bottom of the terminal, we recommend the use of the stand assembly designed for the terminal. However, a sturdy table capable of holding 30 kg (66 pounds) can be used. If a table is used, the paper feed is through the back of the terminal, or possibly through the bottom if the table has a slot for this purpose.

If you have ordered a terminal stand, assemble it as shown.

Position legs (item 1) upside down and insert skirt (item 2) with slot engaging pin. Attach foot (item 3) with 6Mx30 socket head screws (item 5) and secure with hex key supplied (item 6). Attach guides (or optional casters) (item 4) in four locations.

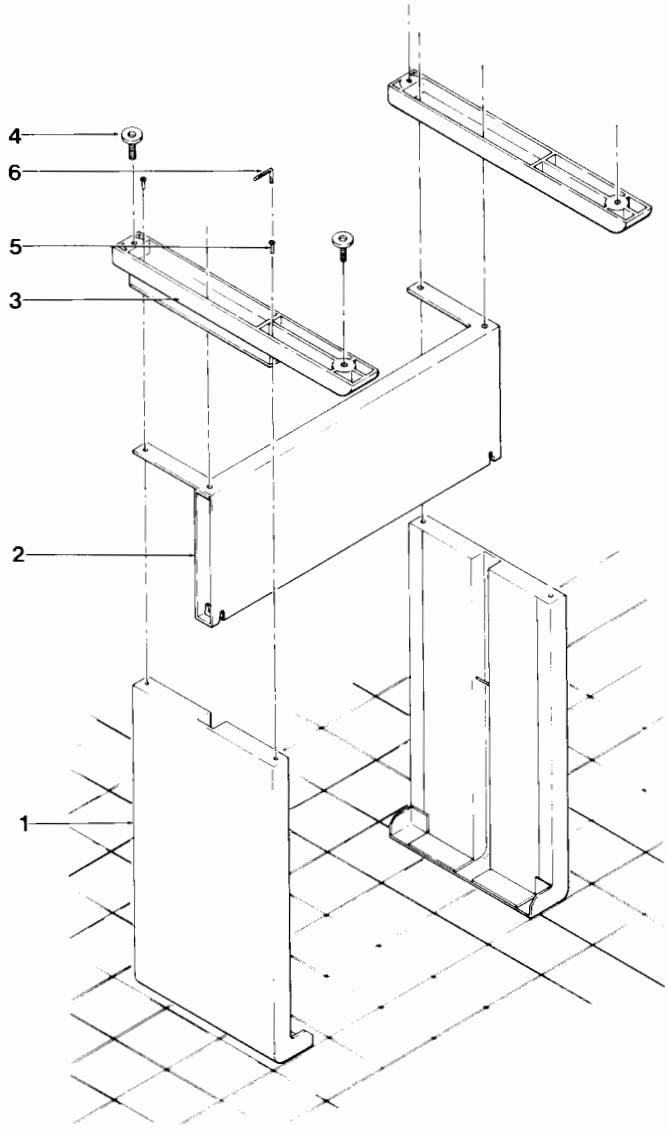

02635-77033-001

INSTALLATION

Perform the following steps to install the terminal:

a. Place the terminal on either the stand or on a flat top table.

b. Make certain that the main power switch located on the back of the terminal is turned off.

c. Connect the power cable to the terminal and to the power source. Connect the interface cable to the terminal and to the system interface.

Computer Museum

Turn assembly right side up and attach mounting arms (item 7) with 6Mx10 socket head screws (item 8) in four locations. Note that arms extend forward over feet. Attach printer (item 10) with 5Mx10 screws (item 9) from underside of terminal.

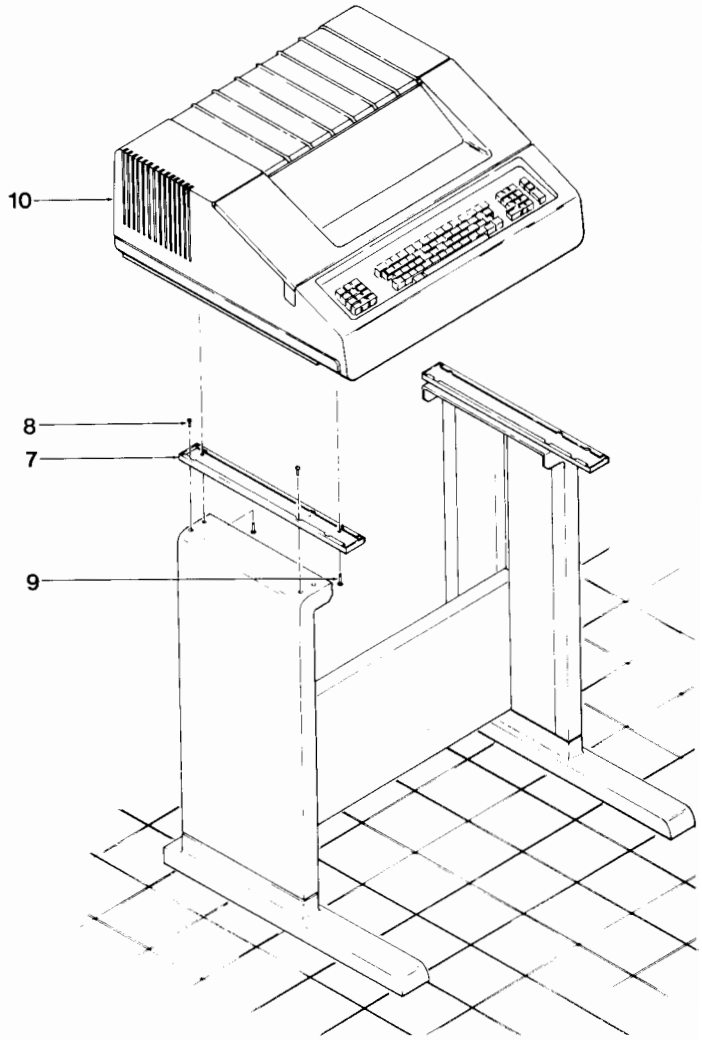

RIBBON CARTRIDGE LOADING AND REMOVAL

Tools are not required to install or remove the ribbon cartridge.

WARNING

If the terminal has been in operation for more than five minutes, the print head will be hot. Before installing or changing the ribbon, allow the terminal to stand with the access cover open and the power off for at least 15 minutes.

TO INSTALL THE RIBBON CARTRIDGE:

a. Turn the terminal off.

b. Push the print head to a position midway between the sideplates and install the new cartridge by sliding the groove in the left end of the cartridge over the tongue on the left mounting bracket.

c. Thread the ribbon around the left ribbon guide and in front of the print head, as shown, and drop the right side of the cartridge onto the drive shaft. A knurled knob on the top right side of the ribbon assembly is used to tension the ribbon and to align the ribbon assembly to the drive shaft.

d. Make certain the right side of the cartridge fits snugly down on the right mounting bracket.

TO REMOVE THE RIBBON CARTRIDGE:

a. Turn the terminal off.

b. Push the print head to a position midway between the sideplates and remove the used ribbon cartridge by raising the right-hand end of the cartridge approximately ½-inch above the drive shaft.

c. Pull the cartridge toward the right until it clears the tongue on the left mounting bracket.

d. Lift the used cartridge from the terminal and discard it.

e. Clean and vacuum all paper, dust and residue from the area under the ribbon cartridge.

02635-77033-009

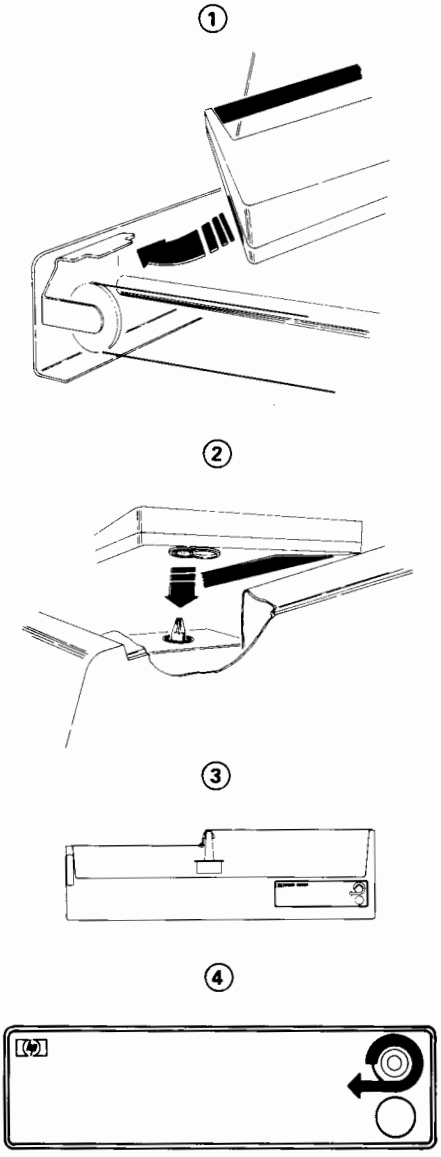

02635-77033-010

PAPER LOADING

Paper may be loaded through the bottom slot or through the back slot of the terminal as shown. To load paper:

a. Open the access cover; then unclamp and open both tractors.

b. If your terminal is mounted on the stand, load the forms through the bottom slot. If your terminal is located on a flat top table, load the forms through the back of the terminal.

c. Push the paper into the terminal until it appears above the print mechanism; then match the tractor lugs to the edge perforations of the paper. Make certain that the paper is not skewed to either side. Close the tractors.

NOTE

Do not close the access cover with the tractors in the open position. The tractors or the viewing window may be damaged.

d. Clamp the tractors in place and close the access cover. Be certain that the leading edge of the paper protrudes through the paper exit without binding.

e. From the keyboard, key in "CTRL L" (Form Feed) to advance the tractors to Top Of Form position.

NOTE

Pressing the RESET switch will set the terminal at "electrical" Top Of Form without advancing paper; however, other pre-established conditions of the terminal may be affected. Refer to the Power On and Reset discussion in this manual.

f. Use the paper advance knob to move paper to the Top Of Form. For fine adjustment, pull the paper advance knob out while turning. With the horizontally perforated paper edge adjusted to the top of form indicator, the first line of print will be located 12.7 mm (½ inch) below the paper edge. Alignment of the left edge of the paper on the 3-centimeter scale establishes the position of the left margin. If, for example, the paper is aligned at the two centimeter mark, the left margin will be located two centimeters from the left hand edge of the paper.

CAUTION

A paper-out switch prevents operation of the terminal when paper is not loaded or is improperly loaded. Do not attempt to defeat the operation of this switch. Attempting to print without the cushioning effect of paper and ribbon may damage the print head.

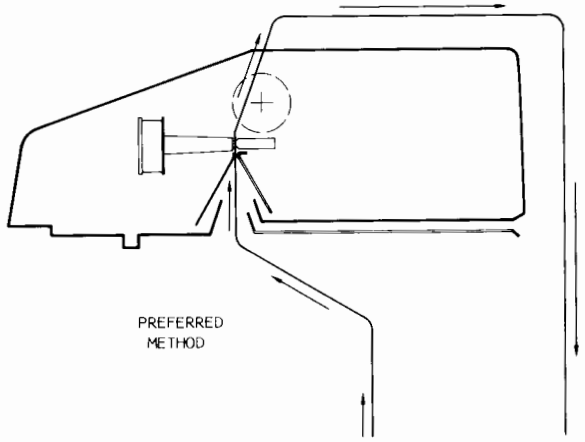

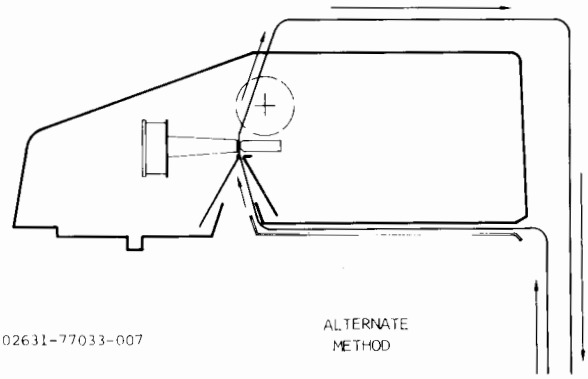

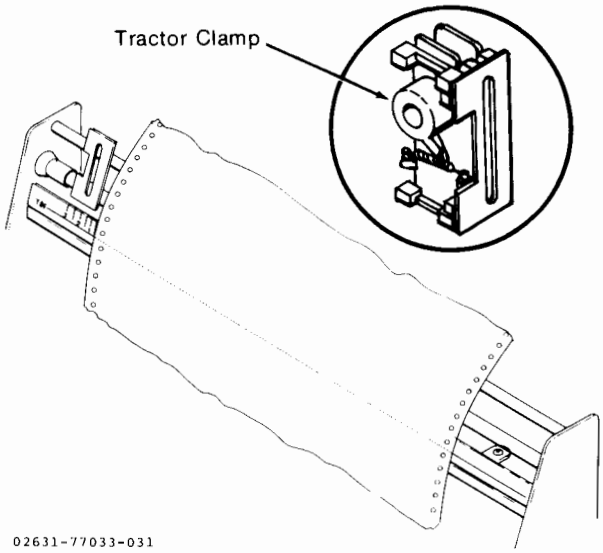

SELF TEST

The SELF TEST switch on the keyboard initiates Go/No Go routine which tests the terminal to determine if it is in proper operating condition. This self test function may also be performed with a control code.

Push the SELF TEST switch to activate the self test function. When the switch is pressed:

a. ROM, RAM, Interface, and Real-Time Clock are tested. An audible tone sounds if all tests function properly.

b. Servo movement is tested. If the carriage is not in the home position (column 0), it will return to this position then drive right to the right stop position; then reverse and drive to the home position again. If all servo test conditions are correct, the tone will sound.

c. The power-on sequence and reset are completed and the terminal is set at default conditions. This is discussed further in the next section.

d. The primary character set is then printed. The order of the printing test is: two lines at 6 LPI (Normal Mode); two lines at 8 LPI (Normal Mode); one line each of compressed, expanded, and auto-underline modes. Display Functions is set, and the complete primary character set is printed, followed by a carriage return and line feed. The printout will contain more than one line for the Expanded Mode and the Display Functions Mode.

NOTE

The second line of the printout displays the alternate character set. If no alternate character set is present, this line will be blank.

e. When the self test printout has been completed, the terminal is reset.

NOTE

If the self test routine fails, press RESET and try the test a second time. If self test fails to perform the second time, contact your HP Service Representative.

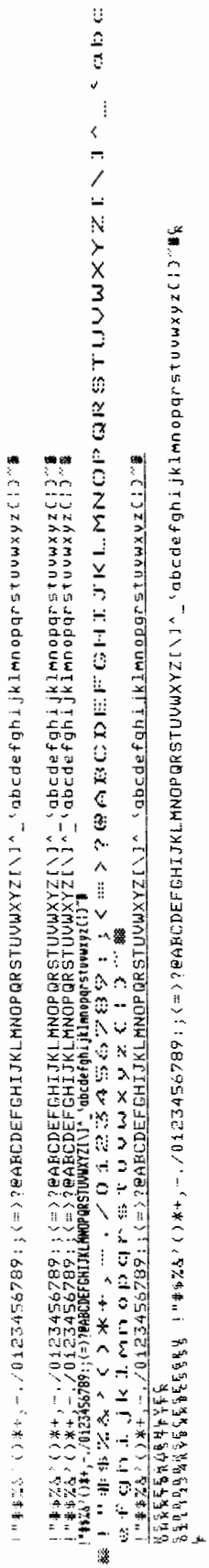

02631-77033-018

Operating Your Terminal 4

Operating the HP 2635A Terminal consists primarily of understanding the use and functions of controls and indicators and the keyboard on the terminal. Many of the terminal functions can be controlled by control codes transmitted to the terminal. These are noted here and detailed under Control Code Reference Data. The following table and figures define and locate the terminal controls and indicators.

Operator Controls and Indicators

Control/Indicator	Description
Main Power On/Off Switch	A rocker switch located on the back of the terminal used to control voltage supply.
Power On Indicator	This LED indicator is located on the keyboard and is on when the main power switch has been turned on.
Paper Advance Knob	Used to manually advance paper. This knob allows adjustment of the paper without changing the electrical register which automatically establishes Top Of Form. Fine adjustment to the paper may be made by pulling the knob out slightly as you turn it.
Print Position Indicator	When the print head enters the view mode, this indicator points to the next position at which a character will be printed when typing resumes.
Print Head Adjustment Lever	A lever used for adjustment of the print head to accommodate varying thicknesses of paper and forms.
Tractor Clamp	A lever used to hold tractors in place after forms have been loaded.
Paper Out Switch	A switch actuated when pressure created by paper is released. When the switch is actuated, an audible tone sounds.
Servo Motor Circuit Breaker	A circuit breaker installed in the terminal to protect the servo motor from overheating if, for example, a paper jam should restrict or hinder print head movement. If the motor overheats because of a paper jam or for any other reason, the circuit breaker will trip. If the circuit breaker trips, the terminal will stop printing at the present position, but will remain on-line. No alarm is sounded. To restore operating status, clear the paper jam (reload paper, if necessary), and depress the circuit breaker switch. The terminal will resume printing. However, data could be lost due to an overrun of the serial interface. If the terminal does not resume printing, check your program status. If you are unable to restore operating conditions, contact you HP Service Representative.
Data Set Ready Indicator	Indicates data set is powered on and ready (used with serial communications only).
Clear To Send Indicator	Indicates data set is on and transmitting (used with serial communications only).
Top Of Form Indicator	This indicator is located on the platen and is used to establish Top Of Form. Refer to the discussion on Paper Loading in this manual.
Horizontal Scale	Indicates column centers (0-136) for Normal print mode.
Baud Switch	A six position switch used to select the correct data transfer rate (matches the speed of the terminal to the speed of the controlling device).
Parity Switch	A three position switch, the setting of which is dictated by system conditions.
Duplex Switch	A two position switch used to select either half or full duplex operation. The setting is dictated by system conditions.

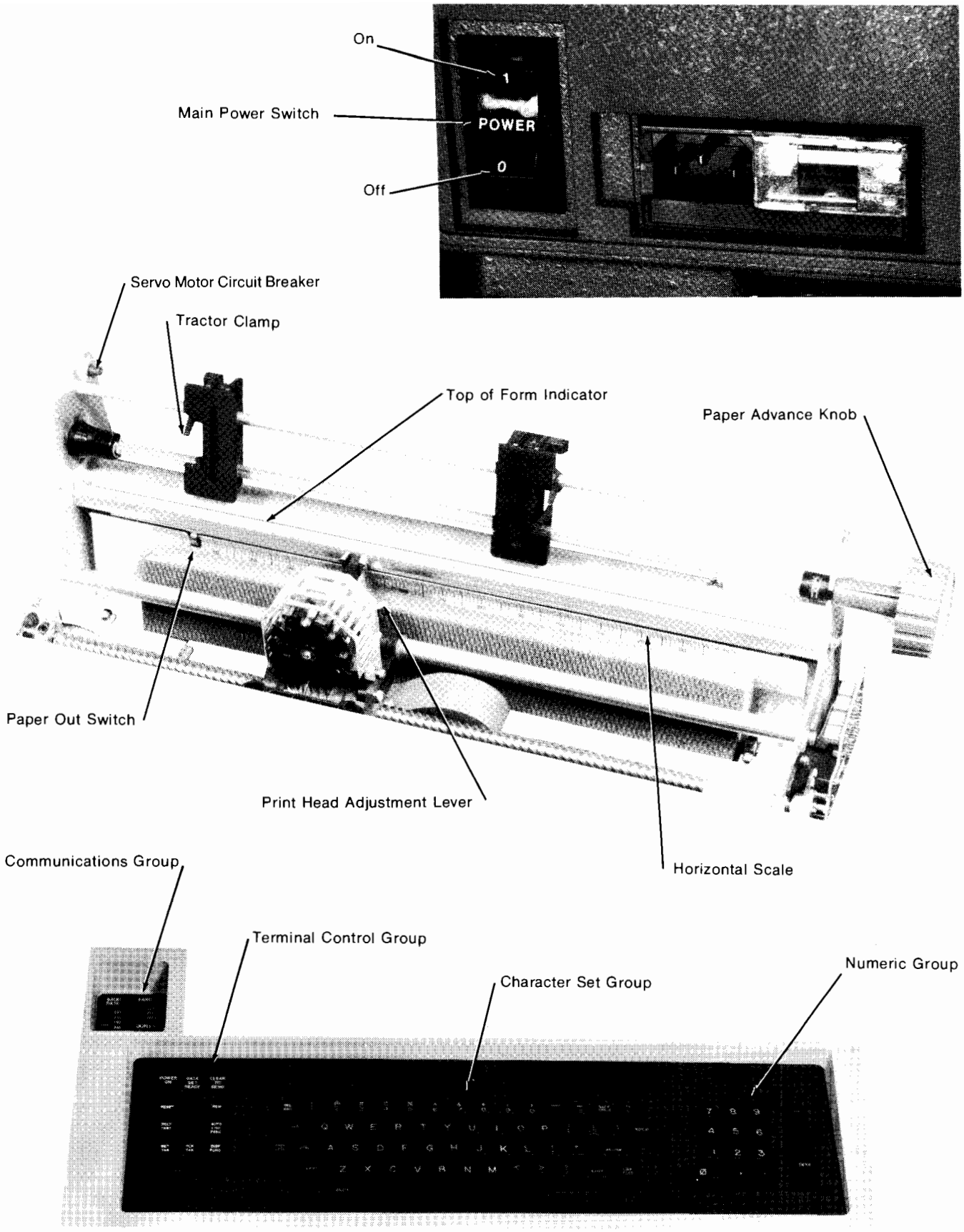

02635-77033-004

HP 2635A Keyboard

KEYBOARD

The keyboard consists of the following functional groups of keys and switches:

a. Communications Group. This set of switches (located under the access cover) is used to select operating parameters for serial interface operations.

b. Character Set Group. This group of keys, which can generate the entire ASCII character set, is similar to a standard typewriter and is used to enter data as well as perform programming functions. Programming functions of individual keys are described in the Control Code Reference Data section of this manual.

NOTE

When the CAPS LOCK key is set in the locked position, it is possible to type lower case letters without releasing the CAPS LOCK key. Depress the SHIFT key, and lower case letters can be typed. Releasing the SHIFT key will not unlock the CAPS LOCK key. The CAPS LOCK key is not the same as the SHIFT key. CAPS LOCK locks only the alphabetical keys and not the entire keyboard into the upper case position.

c. Numeric Group. An additional ten-key adding machine pad is provided to make numeric data entry easier. These keys have the same function as the numeric keys in the Character Set Group.

d. Terminal Control Group. This group of keys is used to initialize the terminal, set the operating mode, and test the terminal. The function of each of the keys in this group is:

RESET. Initiates power-on conditions and sets the terminal in a known state. Refer to the Power On and Reset discussion in this manual.

REMOTE. When depressed, this key sets the terminal on-line (under control of another device or connected to another device for data transmission). When in the up position, this key sets the terminal in the local mode (off-line and under operator control).

NOTE

When the keyboard is being operated (either on-line or off-line), the print head will remain at the current print position unless the time elapsed since the last character entered exceeds 1.5 seconds. If more than 1.5 seconds passes, the print head enters a "view mode" in which it will move to the right a distance of seven character positions enabling the operator to see the last typed character. When a character is again typed, the print head returns to the proper position and begins printing the typed characters. This "view mode" operation will take place every time a typing delay of more than 1.5 seconds occurs. View mode operation may be disabled and enabled with control codes. Refer to the Control Code Reference Data section of this manual. View Mode is enabled under power-on or reset conditions.

SELF TEST. This key initiates a Go/No Go routine that tests the terminal to determine if it is in proper operating condition. This self test function may also be performed via a control code. You will find a detailed description of this test routine in the Preparing Your Terminal for Use section of this manual.

AUTO LINE FEED. When latched in the down position, this key causes a line feed to be transmitted automatically following every carriage return typed from the keyboard.

SET TAB. Sets a tab at the present print position.

CLEAR TAB. Clears the tab at the present print position.

DISPLAY FUNCTIONS. When this key is depressed, all control codes recognized by the HP 2635A will be printed rather than executed (with certain exceptions). Refer to the Display Functions discussion in this manual.

POWER ON AND RESET

When the main power switch (back of terminal) is closed or the RESET switch (keyboard) is pressed, the terminal is set to a known state as follows:

- Off-line
- Print Mode — Normal
- Line Spacing — Six lines per inch
- Horizontal Tabs — All cleared
- Top Of Form (electrical)
- Display Functions — Off
- View Mode — On

Any functions previously directed by control codes from a computer or other controlling device are cleared. The RESET function can also be directed via control codes transmitted to the terminal.

ON-LINE/OFF-LINE

When the terminal is on-line, data and control codes can be transmitted to the terminal. When it is off-line, data and control codes will be ignored by the terminal with certain exceptions. The terminal actually has two off-line states that we will refer to as "soft" off-line and "hard" off-line.

Soft off-line is a state of the terminal resulting from a control code directed off-line, a paper-out condition, or a reset command. In this state, a control code directed on-line will be executed. That is to say that when in the soft off-line state, the controlling device (computer, terminal, etc.) can put the terminal on-line remotely.

Hard off-line results from placing the terminal off-line via the keyboard REMOTE switch. In the hard off-line state, the terminal cannot be placed on-line by the controlling device; the operator must place the unit on-line by depressing the keyboard REMOTE switch.

If the terminal is reset with the keyboard RESET switch, all functions previously directed by control codes from a computer or other device are cleared and the terminal must be reconfigured when it is again put on line.

PRINT MODE SELECTION

Print mode selection for the HP 2635A is performed via a control code. Refer to the Control Code Reference Data section of this manual. The three print modes are: Normal Mode (10 characters per inch); Expanded Mode (5 characters per inch); and, Compressed Mode (16.7 characters per inch).

VERTICAL LINE SPACING

Vertical line spacing for power on and reset conditions is established internally by the terminal at 6 lines per inch. Control codes allow you to establish vertical line spacing at one, two, three, four, six, eight, and twelve LPI. Refer to the Control Code Reference Data section of this manual.

HORIZONTAL TABS

Horizontal tabs are established from either the keyboard or via control codes. Instructions for performing this function via control codes are given in the Control Code Reference Data section of this manual.

DISPLAY FUNCTIONS

The Display Functions Mode is implemented so that embedded control codes will be printed rather than executed. Exceptions are the on-line, off-line, carriage return, and display functions off codes which are executed as well as displayed. The characters representing the control codes are shown in the Control Code Reference Data section of this manual. Display Functions may be implemented by using either the keyboard switch or a control code.

PAPER OUT

If paper runs out during output operations, the terminal stops printing and sounds an audible alarm. If this happens, load more paper and press the Carriage Return. The terminal will continue with no loss of data.

If paper runs out during input operations, the terminal stops operating and sounds an audible alarm. If this happens, load more paper and press the Carriage Return. You can then resume typing with no loss of data.

POWER FAILURE

If a power failure occurs, a probable loss of data will result. When power is returned, the terminal will power on in off-line state under default conditions. Power failure will require resetting of all configurations sent to the terminal via control codes.

Computer Museum

5 Operator Maintenance

PREVENTIVE MAINTENANCE

Maintain the terminal in a state of general overall cleanliness. Accumulated dust, bits of paper, and lint can lead to serious problems.

Watch signs of physical damage and report any problems or potential problems to service personnel.

The air filter on the cooling fan intake, which is located on the right hand side of the terminal, should be vacuumed at least once a week. Turn the power off and, with a brush attachment, vacuum the filter through the air intake opening.

PRINT HEAD CLEANING, REPLACEMENT AND ADJUSTMENT

The print head should be removed and cleaned at least once every two months. Deterioration of print quality between regularly scheduled cleanings may indicate a need for more frequent cleaning. Before deciding to replace the print head, be sure that the problem is not one caused by too infrequent cleaning.

WARNING

If the terminal has been in operation for more than five minutes, the print head will be hot. Perform the following steps before attempting to remove the head:

a. Open the access cover.

b. Turn the main power switch off.

c. Allow the terminal to stand for at least 15 minutes.

TO REMOVE THE PRINT HEAD, PROCEED AS FOLLOWS:

a. Use the hex key which is supplied with the terminal and remove the two hex socket cap screws which retain the head shield.

b. Lift the head shield up and free of the terminal.

c. Remove the two socket cap screws which hold the head.

d. Lift the head up (to disconnect the electrical plug in), back, and up.

When replacing the head, install in the reverse order of the above removal procedure.

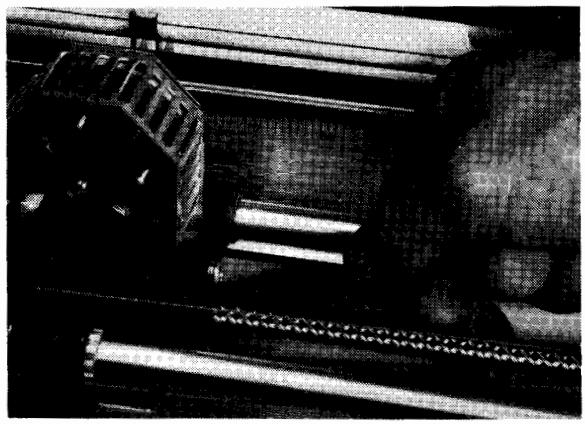

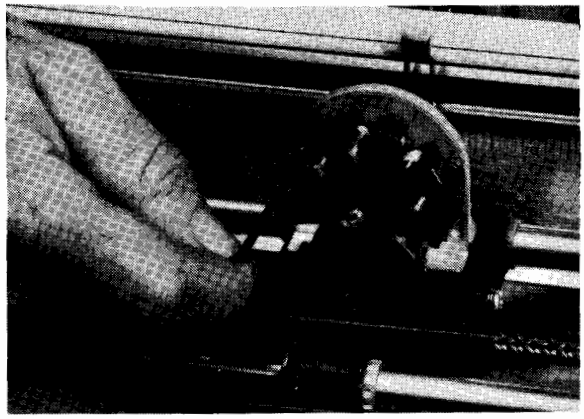

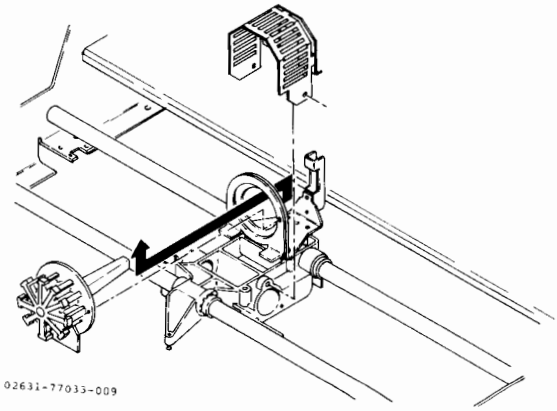

When cleaning the head, use the small, hard bristle brush supplied with the terminal and clean ONLY the narrow end of the head with isopropyl alcohol. Be sure to remove all ink and ribbon residue from around the front bearing. Do not clean the area to the rear of the aluminum plate.

CAUTION

DO NOT USE either ultrasonic cleaning or chemicals containing fluorocarbon compounds on the head.

After the head has been cleaned and is thoroughly dry, reinstall it in reverse order of the removal procedure.

To achieve sharp, intense print quality, adjustment of the print head may be required after cleaning or replacement and for varying thicknesses of paper and forms. Use the print head adjustment lever, which is located on the right side of the print head, to move the print head either forward or to the rear.

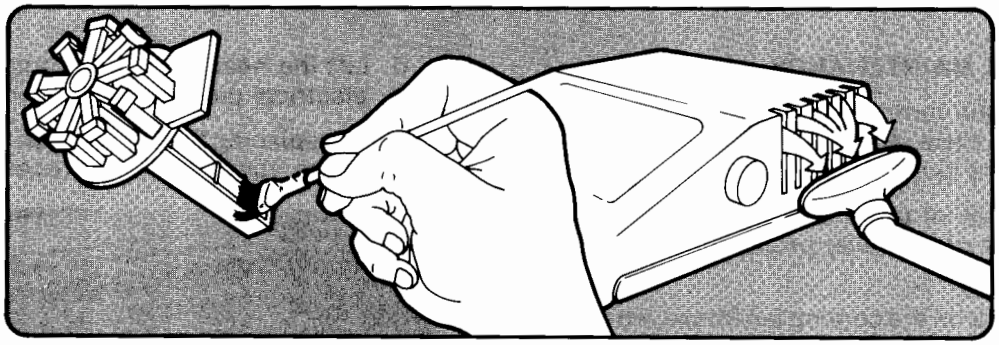

02631-77033-032

IN CASE OF DIFFICULTY

You should not attempt to perform any maintenance of this terminal except routine operator maintenance and replacement of the print head. However, if the terminal fails to function properly, review the following Trouble-Cause chart for a possible solution before asking for service.

Trouble	Cause
Power On indicator does not light when main power switch is turned on.	Power cord is not plugged in. Current is not coming from power outlet. Terminal fuse is blown. (See Power in the Preparing Your Terminal for Use section of this manual.) **NOTE** If an indicator light is obviously burned out, or if you suspect that it is burned out, report the problem to your HP Service Representative. Indicator lights are not operator replaceable.
Print quality becomes erratic, very light or smudged.	Print head may require adjustment or cleaning. Replace ribbon cartridge (see Ribbon Cartridge Loading and Removal in the Preparing Your Terminal for Use section of this manual).
Missing dots or ragged letters develop in printing.	Print head may require adjustment. Clean the print head. If problem persists, replace the print head.
Paper does not advance.	Paper is not properly loaded. Check tractors and paper alignment. Holes in paper are damaged. Check paper and remove damaged sheets. Reload paper (see Paper Loading in the Preparing Your Terminal for Use section of this manual). Paper is caught in box.
Paper tearing or separating on multi-part forms.	Tension on paper is not correct. Check tractors. Check paper for binding or dragging. Reload paper if necessary. Feed multi-part forms from bottom.

Control Code Reference Data

6

All of the functions of this terminal can be controlled by ASCII control codes transmitted as data to the terminal. These codes can be transmitted separately to initialize the terminal for a given print job. They can be embedded in the data to be printed or they can be a mixture of both.

This section lists and defines the control codes that are recognized by the HP 2635A Printing Terminal. The control code "escape" allows additional characters to be transmitted as part of the code referred to as escape sequences. These are described here also.

CONTROL CODES

Control codes recognized by the HP 2635A are described in the following table.

CONTROL CODES

SYMBOL	KEY*	OCTAL	NAME	DESCRIPTION
ENQ	Ec	05	Enquiry	Terminal receives ENQ and responds with ACK if ready to accept at least 80 characters.
ACK	Fc	06	Acknowledge	Transmitted in response to ENQ.
BEL	Gc	07	Bell	Audio response when received.
BS	Hc	10	Back Space	Move one column left.
HT	Ic	11	Horizontal Tab	Move to next tab set. If none, remain at current head position and ring bell three times. Note: Tabs are set and cleared with escape sequences.
LF	Jc	12	Line Feed	Move to next print line maintaining current column position.
FF	Lc	14	Form Feed	Move to first line at top of next page.
CR	Mc	15	Carriage Return	Move to first print position of line.
SO	Nc	16	Shift Out	Select following characters from current secondary character set until receipt of SI.
SI	Oc	17	Shift In	Select following characters from current primary character set until recipt of SO.
DC1	Qc	21	Device Control 1	Triggers transfer of status (refer to escape sequence description for Status Read Back — Appendix A).
ESC	[c	33	Escape	The following characters are a special control sequence.

*lower case "c" indicates CONTROL key is depressed while typing the letter or symbol.

ESCAPE SEQUENCES

In addition to the more conventional single-level type escape sequences (example; Esc E), the HP 2635A employs parameterized escape sequences.

A parameterized escape sequence for the HP 2635A consists of "Esc" followed by an ampersand, a lower case letter, and a value parameter or parameters. Upper case parameters signify the end of the sequence; lower case parameters allow for two or more parameters to be combined in one sequence.

The following functions and escape sequences are used by the HP 2635A Printing Terminal:

SELF TEST

Esc z — Initiates self test routine. Note that this sequence uses lower case z. Also refer to Self Test in the Preparing Your Terminal for Use section of this manual.

STATUS READ BACK

Refer to Appendix A.

RESET

Esc E — Initiates power-on sequence, enables all defaults.

ON/OFF-LINE

Esc n — Transfers terminal to on-line status.
Esc o — Transfers terminal to off-line status.

DISPLAY FUNCTIONS

Esc Y — Turn on Display Functions Mode.
Esc Z — Turn off Display Functions Mode.

NOTE

When Display Functions Mode is enabled, the only control codes which will be decoded and acted upon are: Esc n (on-line command); Esc o (off-line command); CR (Carriage Return); and, Esc Z. A carriage return will first be printed and then a physical return and line feed are executed. An Esc Z will first be printed, and then it will disable Display Functions Mode. All other control codes are printed only.

HORIZONTAL TAB

Esc 1 — Tab set. Tabs may be set on any column from 0-239. For Compressed Print Mode there are 227 print positions per line, but logical tabs can be set from positions 0 through 239.

Esc 2 — Tab clear.
Esc 3 — Clear all tabs.

CHARACTER SET SELECTION

SELECT PRIMARY CHARACTER SET

Esc ([n1]
[n1] = @ ROM Location 0 is Primary
= A ROM Location 1 is Primary

SELECT SECONDARY CHARACTER SET

Esc) [n1]
[n1] = @ ROM Location 0 is Secondary
= A ROM Location 1 is Secondary

PRINT MODE SELECTION

Esc & k [n1] s/S (Alter character size)
[n1] = 0 Normal Mode (10 characters per inch)
= 1 Expanded Mode (5 cpi)
= 2 Compressed Mode (16.7 cpi)

Esc & k [n1] v/V (Last character view)
[n1] = 0 Disable Capability
= 1 Enable Capability

VERTICAL FORMS CONTROL

Esc & l [n1] d/D (Alter terminal response to line feed character)

[n1] = 0 12 line feeds per inch; 1 line feed = 1/12 inch
= 1 1 line feed per inch
= 2 2 line feeds per inch; 1 line feed = 1/2 inch
= 3 3 line feeds per inch; 1 line feed = 1/3 inch
= 4 4 line feeds per inch; 1 line fzed = 1/4 inch
= 6 6 line feeds per inch; 1 line feed = 1/6 inch
= 8 8 line feeds per inch; 1 line feed = 1/8 inch

Esc & l [n1] v/V (Select VFC channel; command implies aulomatic CR)

[n1] = 1 select channel 1 — slew to top of next form
= 2 select channel 2 — slew to bottom of form
= 3 select channel 3 — single space
= 4 select channel 4 — slew to next double space line
= 5 select channel 5 — slew to triple space line
= 6 select channel 6 — slew to next half page line
= 7 select channel 7 — slew to next quarter page line
= 8 select channel 8 — slew to next tenth page line

EXAMPLE OF COMBINED PARAMETERS:

Esc & l 6d 1V — Selects 6 lines per inch and slews to top of form (note lower case d and upper case V).

UNDERLINING

Esc & d [n1]

[n1] = D, E, F, G, L, M, N, O Turn on underline
= @, A, B, C, H, I, J, K Turn off underline

NOTE

Only one of the above parameters is required to turn on or off the underline mode. The large choice of acceptable parameters is provided to ensure compatibility with other HP devices.

NOTES

Computer Museum

```
{&k1SPRINT SPEED}
}
}{&k2SSMART bi-directional printing gives the 2630 FAMILY capabilities unparalleled by other devices in their class.}
}By using microprocessor control, the incoming data stream is buffered and examined to determine which direction}
}the print head should move to minimize the distance to the next printed character. The microprocessor}
}also initiates a high speed slew if 10 or more imbedded blanks are detected. All leading and trailing}
}blanks are similiarly suppressed, allowing both the HP2631A and the HP2635A to offer high performance}
}at a modest cost.}
}
}{&k1S{&dD2630 FAMILY PRINTING CHARACTERISTICS{&dA}
}{&k0S}
}CHARACTER FORMATION                Dot Matrix (7x9)}
}PRINT DIRECTION                    SMART bi-directional}
}                                   (left to right & right to left)}
}PRINT SPEED                        180 Characters per second}
}LINE SPACING                       1,2,3,4,6,8,12 lines per inch}
}FORMS USED                         Up to 6 part}
}PRINT MODES                        Normal(10 characters per inch)}
}                                   Expanded(5 characters per inch)}
}                                   Compressed(16.7 characters per inch)}
}{&k0S}
}THE 2630 FAMILY {&dDMAXIMIZES THROUGHPUT{&dA BY OPTIMIZING THE PRINT DIRECTION.}
}
}{&k1SPRINT VERSATILITY{&k2S}
}
}Both the HP2631A and HP2635A have outstanding speed and throughput, yet speed is only one criterion for judging the capabilities of}
}a printer. There are other {&dDSTANDARD{&dA features which on many other printers are, at best, options.}
}
}Both printers offer a high resolution 7x9 dot matrix with a full 128 USASCII character set standard. Vertical line spacing}
}may be set at 6 or 8 lines per inch by an operator's control switch or at 1,2,3,4,6,8 or 12 lines per inch via program}
}control. This allows mixing line spacing for specialized applications such as engineering and scientific notation.{&l8D}
}{&l0D}
}       {&k2S2                                  {&k0S}
}E=MC ,N ,n ,i}
}       {&k2S1    2    3{&l6D}
}
}Both devices offer three standard print densities (modes): In NORMAL mode the 2630 FAMILY prints similarly to other printers;}
}EXPANDED mode allows highlighting of areas within text such as titles, headings and keywords; in COMPRESSED mode the {&l8D}
}                                                                    1{&l0D}
}2630 FAMILY give highly readable text and allows use of standard 8  /  inch wide pages, printing up to 132 characters across the}
}                                                                    2{&l8D}
}page. {&l6DThere are other {&dDSTANDARD{&dA features of both devices which make them outstanding. Automatic underlining in all print}
}modes allows additional highlighting of text. Horizontal tabs as a standard feature allow high speed slew to specified}
}areas on special forms.}
}
}
}{&k0STHE ABOVE TEXT TOOK 20 SECONDS TO PRINT ON THE HP2631A}
}THIS IS EQUIVALENT TO PRINTING APPROXIMATELY 110 LINES PER MINUTE.}
}
}{}
}
```

EXAMPLES

The material on this page was prepared to describe and illustrate HP 2635A features which are available for your use in a wide range of applications. The fold-out from this page is a duplication of the inside portion. However, the fold-out portion has been printed with Display Functions ON so that you may see the control codes which were used to create these examples.

PRINT SPEED

SMART bi-directional printing gives the 2630 FAMILY capabilities unparalleled by other devices in their class. By using microprocessor control, the incoming data stream is buffered and examined to determine which direction the print head should move to minimize the distance to the next printed character. The microprocessor also initiates a high speed slew if 10 or more imbedded blanks are detected. All leading and trailing blanks are similiarly suppressed, allowing both the HP2631A and the HP2635A to offer high performance at a modest cost.

2630 FAMILY PRINTING CHARACTERISTICS

CHARACTER FORMATION	Dot Matrix (7x9)
PRINT DIRECTION	SMART bi-directional (left to right & right to left)
PRINT SPEED	180 Characters per second
LINE SPACING	1,2,3,4,6,8,12 lines per inch
FORMS USED	Up to 6 part
PRINT MODES	Normal(10 characters per inch) Expanded(5 characters per inch) Compressed(16.7 characters per inch)

THE 2630 FAMILY MAXIMIZES THROUGHPUT BY OPTIMIZING THE PRINT DIRECTION.

PRINT VERSATILITY

Both the HP2631A and HP2635A have outstanding speed and throughput, yet speed is only one criterion for judging the capabilities of a printer. There are other STANDARD features which on many other printers are, at best, options.

Both printers offer a high resolution 7x9 dot matrix with a full 128 USASCII character set standard. Vertical line spacing may be set at 6 or 8 lines per inch by an operator's control switch or at 1,2,3,4,6,8 or 12 lines per inch via program control. This allows mixing line spacing for specialized applications such as engineering and scientific notation.

$E=MC^2$, N_1 , n_2 , i_3

Both devices offer three standard print densities (modes): In NORMAL mode the 2630 FAMILY prints similarly to other printers; EXPANDED mode allows highlighting of areas within text such as titles, headings and keywords; in COMPRESSED mode the 2630 FAMILY give highly readable text and allows use of standard 8 $^1/_2$ inch wide pages, printing up to 132 characters across the page. There are other STANDARD features of both devices which make them outstanding. Automatic underlining in all print modes allows additional highlighting of text. Horizontal tabs as a standard feature allow high speed slew to specified areas on special forms.

THE ABOVE TEXT TOOK 20 SECONDS TO PRINT ON THE HP2631A
THIS IS EQUIVALENT TO PRINTING APPROXIMATELY 110 LINES PER MINUTE.

Appendix A.
Status Read Back

Status Read Back data is valid only with serial interfaces and with HP-IB interface. No status is returned for parallel interface operation.

A status request to the terminal is made by sending Esc^, which directs the terminal to return status whenever control character DC1 appears in the data stream.

When DC1 appears, the terminal's response is:

Esc \ [six bytes] CR-NUL

The status information is contained in the four least significant bits of each byte, while the four most significant bits are used as a mask. Each byte can be interpreted as one of 16 characters as shown at the right.

ASCII Character	Binary	
0	0011	0000
1	0011	0001
2	0011	0010
3	0011	0011
4	0011	0100
5	0011	0101
6	0011	0110
7	0011	0111
8	0011	1000
9	0011	1001
:	0011	1010
;	0011	1011
(	0011	1100
=	0011	1101
)	0011	1110
?	0011	1111

HP 2635A status bytes are shown in the following displays:

BYTE 0 — CHARACTER SET STATUS

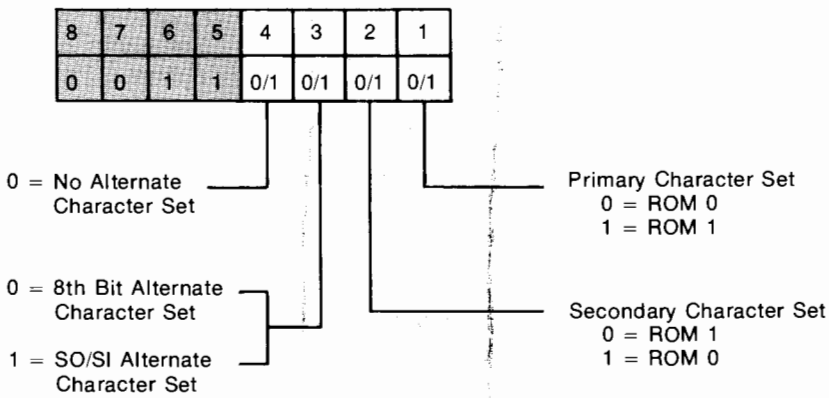

BYTE 1 — PRINT MODE STATUS

8	7	6	5	4	3	2	1
0	0	1	1	0/1	0/1	0/1	0/1

Present Character Set
0 = ROM 0
1 = ROM 1

1 = Underline enabled

1 = Compressed Print is enabled

1 = Expanded Print is enabled

BYTE 2 — PRESENT LINE DENSITY (VERTICAL SPACING)

8	7	6	5	4	3	2	1	
0	0	1	1	0	0	0	0	= 12 lines per inch

8	7	6	5	4	3	2	1	
0	0	1	1	0	0	0	1	= 1 LPI

8	7	6	5	4	3	2	1	
0	0	1	1	0	0	1	0	= 2 LPI

8	7	6	5	4	3	2	1	
0	0	1	1	0	0	1	1	= 3 LPI

8	7	6	5	4	3	2	1	
0	0	1	1	0	1	0	0	= 4 LPI

8	7	6	5	4	3	2	1	
0	0	1	1	0	1	1	0	= 6 LPI

8	7	6	5	4	3	2	1	
0	0	1	1	1	0	0	0	= 8 LPI

BYTE 3 — SWITCH STATUS

8	7	6	5	4	3	2	1
0	0	1	1	0/1	0/1	0/1	0/1

1 = Power on Default to 8 LPI

Not Assigned

1 = Power On Default to Compressed Print

1 = Power On Default to Expanded Print

BYTE 4 — HP-IB STATUS ONLY

For Serial Interface this byte will be returned with the four least significant bits zero.

8	7	6	5	4	3	2	1
0	0	1	1	0/1	0/1	0/1	0/1

1 = Receive Ready Mask

1 = Power Fail Mask

1 = Paper Out Mask

1 = Send Ready Mask

BYTE 5 — HARDWARE STATUS

8	7	6	5	4	3	2	1
0	0	1	1	0/1	0/1	0/1	0/1

1 = 12-inch Strap Selected

1 = Terminal Out of Paper

1 = Out of Paper Restart Pending

1 = Self Test — No Malfunction

0 = Self Test — Malfunction Detected

Appendix B.
Control Code Reference Table

CONTROL CODES

FUNCTION	SYMBOL	CONTROL CODE*	DESCRIPTION NOTES
Enquiry	ENQ	Ec	Terminal receives ENQ responds with ACK if ready to accept 80 characters.
Acknowledge	ACK	Fc	Transmitted in response to ENQ.
Bell	BEL	Gc	Audio response when received.
Backspace	BS	Hc	Move one column left
Horizontal Tab	HT	Ic	Move to next tab set. If none, remain at present position and sound audio alarm.
Line Feed	LF	Jc	Move to next print line while maintaining current column position.
Form Feed	FF	Lc	Move to first line at top of next page.
Carriage Return	CR	Mc	Move to left margin (col. 1)
Shift out	SO	Nc	Select following characters from current secondary character set until receipt of SI.
Shift in	SI	Oc	Select following characters from current primary character set.
Escape	ESC	[c	The following characters are a special control sequence.

**Lower case "c" indicates control key depressed while pressing character key.*

SINGLE LEVEL ESCAPE SEQUENCES

SEQUENCE	EXPLANATION
esc Y (1)	Turn on display functions mode.
esc Z (1)	Turn off display functions mode.
esc 1 (1)	Tab set.
esc 2 (1)	Tab clear.
esc 3	Clear all tabs.
esc E (1)	Initiates power-on sequencing, enabling all defaults.
esc z (1)	Initiates self test routine.
esc ^	Request terminal status readback. Enable terminal to return status word upon receipt of the control character DC1.
esc n (1)	Causes machine to transfer to on line state.
esc o (1)	Causes machine to transfer to off line state.

MULTI-LEVEL ESCAPE SEQUENCES

PREFIX	PARAMETER	TERMINATOR	EXPLANATION
1. Select Secondary Character Set			
ESC)	NONE	@	ROM location 0 is secondary.
	NONE	A	ROM location 1 is secondary.
2. Select Primary Character Set			
ESC (	NONE	@	ROM location 0 is primary.
	NONE	A	ROM location 1 is primary.
3. Auto Underline			
ESC & d	NONE	@,A,B,C,H,I,J,K (5)	Turn off Auto Underline.
	NONE	D,E,F,G,L,M,N,O (5)	Turn on Auto Underline.
4. Print Mode View Mode			
ESC & k	0		Normal Mode (10 cpi).
	1	s/S (2)	Expanded Mode (5 cpi).
	2		Compressed Mode (16.7 cpi).
	0	v/V (2)	Disable View Mode.
	1		Enable View Mode.
5. Paper Control (Line Spacing and VFC)			
ESC & l	0		12 lines per inch. (4)
	1		1 line per inch.
	2		2 lines per inch.
	3	d/D (2)	3 lines per inch.
	4		4 lines per inch.
	6		6 lines per inch.
	8		8 lines per inch.
	1		VFC Ch. 1 — Top of page.
	2		VFC Ch. 2 — Bottom of page.
	3		VFC Ch. 3 — Single space.
	4		VFC Ch. 4 — Next double space.
	5	v/V (2)	VFC Ch. 5 — Next triple space.
	6	(3)	VFC Ch. 6 — Next half page.
	7		VFC Ch. 6 — Next quarter page.
	8		VFC Ch. 8 — Next tenth space.

(1) These functions may be transmitted from the keyboard.
(2) Sequences with the same prefix may be combined. The lower case character is used as an intermediate terminator.
Example: ESC & k0s 1V — select Normal Print Mode, enable View Mode.
(3) VFC commands function in 6 or 8 lines per inch. If any other spacing is selected, the command is executed assuming 6 lines per inch.
(4) Used for subscripts and superscripts.
(5) Any one can be used.

Effect of Control key *

					000-037B		040-077B		100-137B		140-177B	
b_7 b_6 b_5					0_0 0_0	0_0 0_1	0_1 0_0	0_1 0_1	1_0 0_0	1_0 0_1	1_1 0_0	1_1 0_1
BITS				COLUMN →	0	1	2	3	4	5	6	7
b_4	b_3	b_2	b_1	ROW ↓								
0	0	0	0	0	NUL	DLE	SP	0	@	P	`	p
0	0	0	1	1	SOH	DC1	!	1	A	Q	a	q
0	0	1	0	2	STX	DC2	"	2	B	R	b	r
0	0	1	1	3	ETX	DC3	#	3	C	S	c	s
0	1	0	0	4	EOT	DC4	$	4	D	T	d	t
0	1	0	1	5	ENQ	NAK	%	5	E	U	e	u
0	1	1	0	6	ACK	SYN	&	6	F	V	f	v
0	1	1	1	7	BEL	ETB	'	7	G	W	g	w
1	0	0	0	8	BS	CAN	(	8	H	X	h	x
1	0	0	1	9	HT	EM	)	9	I	Y	i	y
1	0	1	0	10	LF	SUB	*	:	J	Z	j	z
1	0	1	1	11	VT	ESC	+	;	K	[	k	{
1	1	0	0	12	FF	FS	,	<	L	\	l	¦
1	1	0	1	13	CR	GS	–	=	M	]	m	}
1	1	1	0	14	SO	RS	.	>	N	^	n	~
1	1	1	1	15	SI	US	/	?	O	_	o	DEL

32 CONTROL CODES

Upshifted Lower Case

64 CHARACTER SET

96 CHARACTER SET

128 CHARACTER SET

EXAMPLE: The representation for the character "K" (column 4, row 11) is.

	b_7	b_6	b_5	b_4	b_3	b_2	b_1
BINARY	1	0	0	1	0	1	1
OCTAL	1	1			3		

9206- 1A

* Depressing the Control key while typing an upper case letter produces the corresponding control code on most terminals. For example, Control-H is a backspace.

HEWLETT-PACKARD CHARACTER SET FOR COMPUTER SYSTEMS

This table shows HP's implementation of ANS X3.4-1968 (USASCII) and ANS X3.32-1973. Some devices may substitute alternate characters from those shown in this chart (for example, Line Drawing Set or Scandanavian font). Consult the manual for your device.

The left and right byte columns show the octal patterns in a 16 bit word when the character occupies bits 8 to 14 (left byte) or 0 to 6 (right byte) and the rest of the bits are zero. To find the pattern of two characters in the same word, add the two values. For example, "AB" produces the octal pattern 040502. (The parity bits are zero in this chart.)

The octal values 0 through 37 and 177 are control codes. The octal values 40 through 176 are character codes.

Decimal Value	Octal Values		Mnemonic	Graphic[1]	Meaning
	Left Byte	Right Byte			
0	000000	000000	NUL	N_U	Null
1	000400	000001	SOH	S_H	Start of Heading
2	001000	000002	STX	S_X	Start of Text
3	001400	000003	ETX	E_X	End of Text
4	002000	000004	EOT	E_T	End of Transmission
5	002400	000005	ENQ	E_Q	Enquiry
6	003000	000006	ACK	A_K	Acknowledge
7	003400	000007	BEL	🔔	Bell, Attention Signal
8	004000	000010	BS	B_S	Backspace
9	004400	000011	HT	H_T	Horizontal Tabulation
10	005000	000012	LF	L_F	Line Feed
11	005400	000013	VT	V_T	Vertical Tabulation
12	006000	000014	FF	F_F	Form Feed
13	006400	000015	CR	C_R	Carriage Return
14	007000	000016	SO	S_O	Shift Out } Alternate Character Set
15	007400	000017	SI	S_I	Shift In } Alternate Character Set
16	010000	000020	DLE	D_L	Data Link Escape
17	010400	000021	DC1	D_1	Device Control 1 (X-ON)
18	011000	000022	DC2	D_2	Device Control 2 (TAPE)
19	011400	000023	DC3	D_3	Device Control 3 (X-OFF)
20	012000	000024	DC4	D_4	Device Control 4 ($\overline{\text{TAPE}}$)
21	012400	000025	NAK	N_K	Negative Acknowledge
22	013000	000026	SYN	S_Y	Synchronous Idle
23	013400	000027	ETB	E_B	End of Transmission Block
24	014000	000030	CAN	C_N	Cancel
25	014400	000031	EM	E_M	End of Medium
26	015000	000032	SUB	S_B	Substitute
27	015400	000033	ESC	E_C	Escape[2]
28	016000	000034	FS	F_S	File Separator
29	016400	000035	GS	G_S	Group Separator
30	017000	000036	RS	R_S	Record Separator
31	017400	000037	US	U_S	Unit Separator
127	077400	000177	DEL	▓	Delete, Rubout[3]

Decimal Value	Octal Values		Character	Meaning
	Left Byte	Right Byte		
32	020000	000040		Space, Blank
33	020400	000041	!	Exclamation Point
34	021000	000042	"	Quotation Mark
35	021400	000043	#	Number Sign, Pound Sign
36	022000	000044	$	Dollar Sign
37	022400	000045	%	Percent
38	023000	000046	&	Ampersand, And Sign
39	023400	000047	′	Apostrophe, Acute Accent
40	024000	000050	(	Left (opening) Parenthesis
41	024400	000051	)	Right (closing) Parenthesis
42	025000	000052	*	Asterisk, Star
43	025400	000053	+	Plus
44	026000	000054	,	Comma, Cedilla
45	026400	000055	–	Hyphen, Minus, Dash
46	027000	000056	.	Period, Decimal Point
47	027400	000057	/	Slash, Slant
48	030000	000060	0	} Digits, Numbers
49	030400	000061	1	} Digits, Numbers
50	031000	000062	2	} Digits, Numbers
51	031400	000063	3	} Digits, Numbers
52	032000	000064	4	} Digits, Numbers
53	032400	000065	5	} Digits, Numbers
54	033000	000066	6	} Digits, Numbers
55	033400	000067	7	} Digits, Numbers
56	034000	000070	8	} Digits, Numbers
57	034400	000071	9	} Digits, Numbers
58	035000	000072	:	Colon
59	035400	000073	;	Semicolon
60	036000	000074	<	Less Than
61	036400	000075	=	Equals
62	037000	000076	>	Greater Than
63	037400	000077	?	Question Mark

Computer Museum

Decimal Value	Octal Values Left Byte	Octal Values Right Byte	Character	Meaning
64	040000	000100	@	Commercial At
65	040400	000101	A	Upper Case Alphabet, Capital Letters
66	041000	000102	B	
67	041400	000103	C	
68	042000	000104	D	
69	042400	000105	E	
70	043000	000106	F	
71	043400	000107	G	
72	044000	000110	H	
73	044400	000111	I	
74	045000	000112	J	
75	045400	000113	K	
76	046000	000114	L	
77	046400	000115	M	
78	047000	000116	N	
79	047400	000117	O	
80	050000	000120	P	
81	050400	000121	Q	
82	051000	000122	R	
83	051400	000123	S	
84	052000	000124	T	
85	052400	000125	U	
86	053000	000126	V	
87	053400	000127	W	
88	054000	000130	X	
89	054400	000131	Y	
90	055000	000132	Z	
91	055400	000133	[	Left (opening) Bracket
92	056000	000134	\	Backslash, Reverse Slant
93	056400	000135	]	Right (closing) Bracket
94	057000	000136	^ ↑	Caret, Circumflex; Up Arrow[4]
95	057400	000137	_ ←	Underline; Back Arrow[4]

Decimal Value	Octal Values Left Byte	Octal Values Right Byte	Character	Meaning
96	060000	000140	`	Grave Accent[5]
97	060400	000141	a	Lower Case Letters[5]
98	061000	000142	b	
99	061400	000143	c	
100	062000	000144	d	
101	062400	000145	e	
102	063000	000146	f	
103	063400	000147	g	
104	064000	000150	h	
105	064400	000151	i	
106	065000	000152	j	
107	065400	000153	k	
108	066000	000154	l	
109	066400	000155	m	
110	067000	000156	n	
111	067400	000157	o	
112	070000	000160	p	
113	070400	000161	q	
114	071000	000162	r	
115	071400	000163	s	
116	072000	000164	t	
117	072400	000165	u	
118	073000	000166	v	
119	073400	000167	w	
120	074000	000170	x	
121	074400	000171	y	
122	075000	000172	z	
123	075400	000173	{	Left (opening) Brace[5]
124	076000	000174	¦	Vertical Line[5]
125	076400	000175	}	Right (closing) Brace[5]
126	077000	000176	~	Tilde, Overline[5]

9206- 1C

Notes: [1]This is the standard display representation. The software and hardware in your system determine if the control code is displayed, executed, or ignored. Some devices display all control codes as ":", "@", or space.

[2]Escape is the first character of a special control sequence. For example, ESC followed by "J" clears the display on a 2640 terminal.

[3]Delete may be displayed as "__", "@", or space.

[4]Normally, the caret and underline are displayed. Some devices substitute the up arrow and back arrow.

[5]Some devices upshift lower case letters and symbols (` through ~) to the corresponding upper case character (@ through ^). For example, the left brace would be converted to a left bracket.

NOTES

HEWLETT hp PACKARD

SALES & SERVICE OFFICES

AFRICA, ASIA, AUSTRALIA

AMERICAN SAMOA
Calculators Only
Oceanic Systems Inc.
P.O. Box 777
Pago Pago Bayfront Road
Pago Pago 96799
Tel: 633-5513
Cable: OCEANIC-Pago Pago

ANGOLA
Telectra
Empresa Técnica de Equipamentos Eléctricos, S.A.R.L.
R. Barbosa Rodrigues, 42-I°DT.°
Caixa Postal, 6487
Luanda
Tel: 35515/6
Cable: TELECTRA Luanda

AUSTRALIA
Hewlett-Packard Australia Pty. Ltd.
31-41 Joseph Street
Blackburn, Victoria 3130
P.O. Box 36
Doncaster East, Victoria 3109
Tel: 89-6351
Telex: 31-024
Cable: HEWPARD Melbourne

Hewlett-Packard Australia Pty. Ltd.
31 Bridge Street
Pymble
New South Wales, 2073
Tel: 449-6566
Telex: 21561
Cable: HEWPARD Sydney

Hewlett-Packard Australia Pty. Ltd.
153 Greenhill Road
Parkside, 5063, S.A.
Tel: 272-5911
Telex: 82536 ADEL
Cable: HEWPARD ADELAIDE

Hewlett-Packard Australia Pty. Ltd.
141 Stirling Highway
Nedlands, W.A. 6009
Tel: 86-5455
Telex: 93859 PERTH
Cable: HEWPARD PERTH

Hewlett-Packard Australia Pty. Ltd.
121 Wollongong Street
Fyshwick, A.C.T. 2609
Tel: 95-3733
Telex: 62650 Canberra
Cable: HEWPARD CANBERRA

Hewlett Packard Australia Pty. Ltd.
5th Floor
Teachers Union Building
495-499 Boundary Street
Spring Hill, 4000 Queensland
Tel: 29-1544
Telex: 42133 BRISBANE

GUAM
Medical/Pocket Calculators Only
Guam Medical Supply, Inc.
Jay Ease Building, Room 210
P.O. Box 8947
Tamuning 96911
Tel: 646-4513
Cable: EARMED Guam

HONG KONG
Schmidt & Co.(Hong Kong) Ltd.
P.O. Box 297
Connaight Centre
39th Floor
Connaught Road, Central
Hong Kong
Tel: H-255291-5
Telex: 74766 SCHMC HX
Cable: SCHMIDTCO Hong Kong

INDIA
Blue Star Ltd.
Kasturi Buildings
Jamshedji Tata Rd.
Bombay 400 020
Tel: 29 50 21
Telex: 2156
Cable: BLUEFROST

Blue Star Ltd.
Sahas
414/2 Vir Savarkar Marg
Prabhadevi
Bombay 400 025
Tel: 45 78 87
Telex: 4093
Cable: FROSTBLUE

Blue Star Ltd.
Band Box House
Prabhadevi
Bombay 400 025
Tel: 45 73 01
Telex: 3751
Cable: BLUESTAR

Blue Star Ltd.
14/40 Civil Lines
Kanpur 208 001
Tel: 6 88 82
Telex: 292
Cable: BLUESTAR

Blue Star Ltd.
7 Hare Street
P.O. Box 506
Calcutta 700 001
Tel: 23-0131
Telex: 7655
Cable: BLUESTAR

Blue Star Ltd.
7th & 8th Floor
Bhandari House
91 Nehru Place
New Delhi 110024
Tel: 634770 & 635166
Telex: 2463
Cable: BLUESTAR

Blue Star Ltd.
Blue Star House
11/11A Magarath Road
Bangalore 560 025
Tel: 55668
Telex: 430
Cable: BLUESTAR

Blue Star Ltd.
Meeakshi Mandiran
xxx/1678 Mahatma Gandhi Rd.
Cochin 682 016 Kerala
Tel: 32069, 32161, 32282
Telex: 046-514
Cable: BLUESTAR

Blue Star Ltd.
1-1-117/1
Sarojini Devi Road
Secunderabad 500 003
Tel: 70126, 70127
Cable: BLUEFROST
Telex: 459

Blue Star Ltd.
2/34 Kodambakkan High Road
Madras 600034
Tel: 82056
Telex: 041-379
Cable: BLUESTAR

Blue Star Ltd.
Nathraj Mansions
2nd Floor Bistupur
Jamshedpur 831 001
Tel: 7383
Cable: BLUESTAR
Telex: 240

INDONESIA
BERCA Indonesia P.T.
P.O. Box 496
1st Floor JL. Cikini Raya 61
Jakarta
Tel: 56038, 40369, 49886
Telex: 42895
Cable: BERCACON

BERCA Indonesia P.T.
63 JL. Raya Gubeng
Surabaya
Tel: 44309

ISRAEL
Electronics & Engineering Div. of Motorola Israel Ltd
16, Kremenetski Street
P.O. Box 25016
Tel-Aviv
Tel: 03-389 73
Telex: 33569
Cable: BASTEL Tel-Aviv

JAPAN
Yokogawa-Hewlett-Packard Ltd
Ohashi Building
1-59-1 Yoyogi
Shibuya-ku, **Tokyo**
Tel: 03-370-2281/92
Telex: 232-2024YHP
Cable: YHPMARKET TDK 23-724

Yokogawa-Hewlett-Packard Ltd.
Nissei Ibaraki Building
2-8 Kasuga 2-chrome, Ibaraki-shi
Osaka 567
Tel: (0726) 23-1641
Telex: 5332-385 YHP OSAKA

Yokogawa-Hewlett-Packard Ltd.
Nakamo Building
24 Kami Sasajima-cho
Nakamura-ku, **Nagoya**, 450
Tel: (052) 571-5171

Yokogawa-Hewlett-Packard Ltd.
Tanigawa Building
2-24-1 Tsuruya-choo
Kanagawa-ku
Yokohama, 221
Tel: 045-312-1252
Telex: 382-3204 YHP YOK

Yokogawa-Hewlett-Packard Ltd.
Mito Mitsui Building
105, 1-chrome, San-no-maru
Mito, Ibaragi 310
Tel: 0292-25-7470

Yokogawa-Hewlett-Packard Ltd.
Inoue Building
1348-3, Asahi-cho, 1-chome
Atsugi, Kanagawa 243
Tel: 0462-24-0452

Yokogawa-Hewlett-Packard Ltd.
Inoue Building
1348-3, Asahi-cho, 1-chome
Atsugi, Kanagawa 243
Tel: 0462-24-0452

Yokogawa-Hewlett-Packard Ltd.
Kimura Building
3rd Floor 20
2-chome, Tsukuba
Kumagaya, Saitama 360
Tel: 0485-24-6563

KENYA
Technical Engineering Services (E.A.)Ltd.,
P.O. Box 18311
Nairobi
Tel: 557726/556762
Cable: PROTON

Medical Only
International Aeradio(E.A.)Ltd.,
P.O. Box 19012
Nairobi Airport
Nairobi
Tel: 336055/56
Telex: 22201/22301

KOREA
Samsung Electronics Co., Ltd.
20th Fl. Dongbang Bldg. 250.
2-KA, C.P.O. Box 2775
Taepyung-Ro, Chung-Ku
Seoul
Tel: (24) 2410-9
Telex: 22575

MALAYSIA
Teknik Mutu Sdn. Bhd.
2 Lorong 13/6A
Section 13
Petaling Jaya,**Selangor**
Tel: Kuala Lumpur-54994
Telex: MA 37605

Protel Engineering
P.O. Box 1917
Lot 259, Satok Road
Kuching, **Sarawak**
Tel: 2400

MOZAMBIQUE
A.N. Goncalves, Lta.
162, 1° Apt. 14 Av. D. Luis
Caixa Postal 107
Lourenco Marques
Tel: 27091, 27114
Telex: 6-203 Negon Mo

NEW ZEALAND
Hewlett-Packard (N.Z.) Ltd.
4-12 Cruickshank Street
Kilbirnie, Wellington 3
Mailing Address: Hewlett-Packard (N.Z.) Ltd.
P.O. Box 9443
Courtney Place
Wellington
Tel: 877-199
Telex: NZ 3839
Cable: HEWPACK Wellington

Hewlett-Packard (N.Z.) Ltd.
Pakuranga Professional Centre
267 Pakuranga Highway
Box 51092
Pakuranga
Tel: 569-651
Telex: NZ 3839
Cable: HEWPACK,Auckland

Analytical/Medical Only
Medical Supplies N.Z. Ltd.
Scientific Division
79 Carlton Gore Rd., Newmarket
P.O. Box 1234
Auckland
Tel: 75-289
Telex: 2958 MEDISUP
Cable: DENTAL Auckland

Analytical/Medical Only
Medical Supplies N.Z. Ltd
P.O. Box 1994
147-161 Tory St.
Wellington
Tel: 850-799
Telex: 3858
Cable: DENTAL, Wellington

Analytical/Medical Only
Medical Supplies N.Z. Ltd.
P.O. Box 309
239 Stanmore Road
Christchurch
Tel: 892-019
Cable: DENTAL, Christchurch

Analytical/Medical Only
Medical Supplies N.Z. Ltd
303 Great King Street
P.O. Box 233
Dunedin
Tel: 88-817
Cable: DENTAL, Dunedin

NIGERIA
The Electronics Instrumentations Ltd.
N6B 770 Oyo Road
Oluseun House
P.M.B. 5402
Ibadan
Tel: 61577
Telex: 31231 TEIL Nigeria
Cable: THETEIL Ibadan

The Electronics Instrumentations Ltd.
144 Agege Motor Road, Mushin
P.O. Box 6645
Lagos
Cable: THETEIL Lagos

PAKISTAN
Mushko & Company, Ltd.
Oosman Chambers
Abdullah Haroon Road
Karachi-3
Tel: 511027, 512927
Telex: KR894
Cable: COOPERATOR Karachi

Mushko & Company, Ltd.
38B, Satellite Town
Rawalpindi
Tel: 41924
Cable: FEMUS Rawalpindi

PHILIPPINES
The Online Advanced Systems Corporation
Filcapital Bldg.
11th Floor, Ayala Ave.
Makati, **Rizal**
Tel: 85-34-91, 85-35-81
Telex: 3274 ONLINE

RHODESIA
Field Technical Sales
45 Kelvin Road North
P.O. Box 3458
Salisbury
Tel: 705231 (5 lines)
Telex: RH 4122

SINGAPORE
Hewlett-Packard Singapore (Pte.) Ltd.
Blk. 2, 6th Floor, Jalan Bukit Merah
Redhill Industrial Estate
Alexandra P.O. Box 58,
Singapore 3
Tel: 633022
Telex: HPSG RS 21486
Cable: HEWPACK, Singapore

SOUTH AFRICA
Hewlett-Packard South Africa (Pty.), Ltd.
Private Bag Wendywood
Sandton, Transvaal 2144
Hewlett-Packard House
Daphne Street, Wendywood,
Sandton, Transvaal 2144
Tel: 802-104016
Telex: SA43-4782JH
Cable: HEWPACK JOHANNESBURG

Hewlett-Packard South Africa (Pty.), Ltd.
P.O. Box 120
Howard Place, Cape Province, 7450
Pine Park Center, Forest Drive
Pinelands, Cape Province, 7405
Tel: 53-7955 thu 9
Telex: 57-0006

Hewlett-Packard South Africa (Pty.), Ltd.
P.O. Box 37099
Overport, Durban 4067
641 Ridge Road, Durban
Durban, 4001
Tel: 88-7478/9
Telex: 6-7954
Cable: HEWPACK

TAIWAN
Hewlett-Packard Far East Ltd.,
Taiwan Branch
39 Chung Shiao West Road
Sec. 1, 7th Floor
Taipei
Tel: 3819160-4 (5 Lines)
Telex: 21824 HEWPACK
Cable: HEWPACK TAIPEI

Hewlett-Packard Far East Ltd
Taiwan Branch
68-2, Chung Cheng 3rd. Road
Kaohsiung
Tel: (07) 242318-Kaohsiung

Analytical Only
San Kwang Instruments Co., Ltd.,
No. 20, yung Sui Road
Taipei, 100
Tel: 3715171-4 (5 lines)
Telex: 22894 SANKWANG
Cable: SANKWANG TAIPEI

TANZANIA
Medical Only
International Aeradio (E.A.), Ltd.
P.O. Box 861
Daressalaam
Tel: 21251 Ext. 265
Telex: 41030

THAILAND
UNIMESA Co., Ltd.
Elcom Research Building
Bangjak Sukumvit Ave
Bangkok
Tel: 932387, 930338
Cable: UNIMESA Bangkok

UGANDA
Medical Only
International Aeradio(E.A.), Ltd.
P.O. Box 2577
Kampala
Tel: 54388
Cable: INTAERIO Kampala

ZAMBIA
R.J. Tilbury (Zambia) Ltd
P.O. Box 2792
Lusaka
Tel: 73793
Cable: ARJAYTEE, Lusaka

OTHER AREAS NOT LISTED, CONTACT:
Hewlett-Packard Intercontinental
3200 Hillview Ave
Palo Alto, California 94304
Tel: (415) 493-1501
TWX: 910-373-1267
Cable: HEWPACK Palo Alto
Telex: 034-8300, 034-8493

CANADA

ALBERTA
Hewlett-Packard (Canada) Ltd.
11620A - 168 Street
EdmontonT5M 3T9
Tel: (403) 452-3670
TWX: 610-831-2431 EDTH

Hewlett-Packard (Canada) Ltd.
915-42 Ave S.E., Suite 102
Calgary T2G 1Z1
Tel: (403) 287-1672
Twx: 610-821-6141

BRITISH COLUMBIA
Hewlett-Packard (Canada) Ltd.
837 E. Cordova Street
Vancouver V6A 3R2
Tel: (604) 254-0531
TWX: 610-922-5059 VCR

MANITOBA
Hewlett-Packard (Canada) Ltd.
513 Century St.
St. James
Winnipeg R3H 0L8
Tel: (204) 786-7581
TWX: 610-671-3531

NOVA SCOTIA
Hewlett-Packard (Canada) Ltd.
800 Windmill Road
P.O. Box 9331
Dartmouth B2Y 3Z6
Tel: (902) 469-7820
TWX: 610-271-4482 HFX

ONTARIO
Hewlett-Packard (Canada) Ltd.
1785 Woodward Dr.
Ottawa K2C 0P9
Tel: (613) 225-6530
TWX: 610-562-8968

Hewlett-Packard (Canada) Ltd.
6877 Goreway Drive
Mississauga L4V 1M8
Tel: (416) 678-9430
TWX: 610-492-4246

QUEBEC
Hewlett-Packard (Canada) Ltd.
275 Hymus Blvd.
Pointe Claire H9R 1G7
Tel: (514) 697-4232
TWX: 610-422-3022
TLX: 05-821521 HPCL

FOR CANADIAN AREAS NOT LISTED:
Contact Hewlett-Packard (Canada) Ltd. in Mississauga

CENTRAL AND SOUTH AMERICA

ARGENTINA
Hewlett-Packard Argentina S.A.
Av. Leandro N. Alem 822 - 12°
1001**Buenos Aires**
Tel: 31-6063,4,5,6 and 7
Telex: Public Booth N° 9
Cable: HEWPACK ARG

BOLIVIA
Stambuk & Mark (Bolivia) Ltda.
Av. Mariscal, Santa Cruz 1342
La Paz
Tel: 40626, 53163, 52421
Telex: 3560014
Cable: BUKMAR

BRAZIL
Hewlett-Packard do Brasil I.E.C. Ltda.
Avenida Rio Negro, 980
Alphaville
06400 Barueria,**Sao Paulo**
Tel: 429-2148/9,429-2118/9

Hewlett-Packard do Brasil I.E.C. Ltda.
Rua Padre Chagas, 32
90000-**Pórto Alegre**-RS
Tel: (0512) 22-2998, 22-5621
Cable: HEWPACK pórto Alegre

Hewlett-Packard do Brasil I.E.C. Ltda.
Rua Siqueira Campos, 53, 4 andar-Copacabana
20000-**Rio de Janeiro**-GB
Tel: 257-80-94/DDD (021)
Telex: 391-212-1905 HEWP-BR
Cable: HEWPACK Rio de Janeiro

CHILE
Calcagni y Metcalfe Ltda
Alameda 580-Of. 807
Casilla 2118
Santiago, 1
Tel: 398613
Telex: 3520001 CALMET
Cable: CALMET Santiago

Medical Only
General Machinery Co., Ltda
Paraguay 494
Casilla 13910
Santiago
Tel: 31123, 31124
Cable: GEMCO Santiago

COLOMBIA
Instrumentación
Henrik A. Langebaek & Kier S.A.
Carrera 7 No. 48-75
Apartado Aereo 6287
Bogota, I.D.E.
Tel: 69-88-77
Cable: AARIS Bogota
Telex: 044-400

COSTA RICA
Cientifica Costarricense S.A.
Calle Central, Avenidas 1 y 3
Apartado 10159
San Jose
Tel: 21-86-13
Cable: GALGUR San José

ECUADOR
Medical Only
A.F. Viscaino Compañia Ltda
Av. Rio Amazonas No. 239
P.O. Box 2925
Quito
Tel: 242-150,247-033/034
Cable: Astor Quito

Calculators Only
Computadoras y Equipos Electrónicos
P.O. Box 2695
990 Toledo (y Corderol)
Quito
Tel: 525-982
Telex: 02-2113 Sagita Ed
Cable: Sagita-Quito

EL SALVADOR
Instrumentacion y Procesamiento Electronico de el Salvador
Bulevar de los Heroes II-48
San Salvador
Tel: 252787

GUATEMALA
IPESA
Avenida La Reforma 3-48
Zona 9
Guatemala City
Tel: 63627, 64786
Telex: 4192 Teletro Gu

MEXICO
Hewlett-Packard Mexicana, S.A. de C.V.
Torres Adalid No. 21, 11. Piso
Col. del Valle
Mexico 12, D.F.
Tel: 1905) 543-42-32
Telex: 017-74-507

Hewlett-Packard Mexicana, S.A. de C.V.
Ave. Constitucion No. 2184
Monterrey, N.L.
Tel: 48-71-32, 48-71-84
Telex: 038-843

NICARAGUA
Roberto Terán G.
Apartado Postal 689
Edificio Terán
Managua
Tel: 25114, 23412,23453
Cable: ROTERAN Managua

PANAMA
Electronico Balboa, S.A.
P.O. Box 4929
Calle Samuel Lewis
Cuidad de Panama
Tel: 64 2700
Telex: 3431103 Curundu Canal Zone
Cable: ELECTRON Panama

PARAGUAY
Z.J. Melamed S.R.L.
Division Aparatos y Equipos Médicos
Division Aparatos y Equipos Cientificos y de Investigacion
P.O. Box 676
Chile-482, Edificio Victoria
Asuncion
Tel: 4-5069, 4-6272
Cable: RAMEL

PERU
Compañia Electro Médica S.A.
Los Flamencos 145
San Isidro Casilla 1030
Lima 1
Tel: 41-4325
Cable: ELMED Lima

PUERTO RICO
Hewlett-Packard Inter-Americas
Puerto Rico Branch Office
Calle 272, Urb. Country Club
Carolina 00639
Tel: (809) 762-7355,7455,7655
Telex: HPIC-PR 3450514

URUGUAY
Pablo Ferrando S.A.
Comercial e Industrial
Avenida Italia 2877
Casilla de Correo 370
Montevideo
Tel: 40-3102
Cable: RADIUM Montevideo

VENEZUELA
Hewlett-Packard de Venezuela C.A.
Apartado 50933, Caracas 105
Edificio Segre
Tercera Transversal
Los Ruices Norte
Caracas 107
Tel: 35-01-07, 35-00-84, 35-00-65, 35-00-31
Telex: 25146 HEWPACK
Cable: HEWPACK Caracas

FOR AREAS NOT LISTED, CONTACT
Hewlett-Packard Inter-Americas
3200 Hillview Ave
Palo Alto, California 94304
Tel: (415) 493-1501
TWX: 910 373-1260
Cable: HEWPACK Palo Alto
Telex: 034-8300, 034-8493

EUROPE, NORTH AFRICA AND MIDDLE EAST

AUSTRIA
Hewlett-Packard Ges.m.b.H.
Handelskai 52
P.O. box 7
A-1205 **Vienna**
Tel: (0222) 35 16 21 to 27
telex: HEWPAK Vienna
telex: 75923 hewpak a

BELGIUM
Hewlett-Packard Benelux
S.A./N.V.
Avenue de Col-Vert, 1,
(Groenkraaglaan)
B-1170 **Brussels**
Tel: (02) 672 22 40
Cable: PALOBEN Brussels
Telex: 23 494 paloben bru

CYPRUS
Kypronics
19, Gregorios & Xenopoulos Rd
P.O. Box 1152
CY-**Nicosia**
Tel: 45628/29
Cable: KYPRONICS PANDEHIS
Telex: 3018

CZECHOSLOVAKIA
Vyvojova a Provozni Zakladna
Vyzkumnych Ustavu v Bechovicich
CSSR-25097
Bechovice u Prahy
Tel: 89 93 41
Telex: 121333

DDR
Entwicklungslabor der TU Dresden
Forschungsinstitut Meinsberg
DDR-7305
Waldheim/Meinsberg
Tel: 37 667
Telex: 518741

Firma Forgber
Schlegelstrasse 15
1040 **Berlin**
Tel: 28 27 411
Telex: 112889

DENMARK
Hewlett-packard A/S
Datavej 52
DK-3460 **Birkerød**
Tel: (02) 81 66 40
Cable: HEWPACK AS
Telex: 166 40 hpas

Hewlett-Packard A/S
Navervej 1
DK-8600 **Silkeborg**
Tel: (06) 82 71 66
Telex: 166 40 hpas
Cable: HEWPACK AS

FINLAND
Hewlett-Packard OY
Nahkahousuntie 5
P.O. Box 6
SF-00211 **Helsinki** 21
Tel: 6923031
Cable: HEWPACKOY Helsinki
Telex: 12-1563

FRANCE
Hewlett-Packard France
Quartier de Courtaboeuf
Boite Postale No. 6
F-91401 **Orsay** Cédex
Tel: (1) 907 78 25
Cable: HEWPACK Orsay
Telex: 600048

Hewlett-Packard France
"Le Saquin"
Chemin des Mouilles
Boite Postale No. 12
F-69130 **Ecully**
Tel: (78) 33 81 25,
Cable: HEWPACK Eculy
Telex: 310617

Hewlett-Packard France
Agence Régionale
Péricentre de la Cépière
Chemin de la Cépière, 20
F-31300 **Toulouse-Le Mirail**
Tel:(61) 40 11 12
Cable: HEWPACK 51957
Telex: 510957

Hewlett-Packard France
Agence Régionale
Aéroport principal de
Marseille-Marignane
F-13721**Marignane**
Tel: (91) 89 12 36
Cable: HEWPACK MARGN
Telex: 410770

Hewlett-Packard France
Agence Régionale
63, Avenue de Rochester
Bôite Postale
F-35014 **Rennes** Cédex
Tel: (99) 36 33 21
Cable: HEWPACK 74912
Telex: 740912

Hewlett-Packard France
Agence Régionale
74, Allée de la Robertsau
F-67000 **Strasbourg**
Tel: (88) 35 23 20/21
Telex: 890141
Cable: HEWPACK STRBG

Hewlett-Packard France
Agence Régionale
Centre Vauban
201, rue Colbert
Entrée A2
F-59000 **Lille**
Tel: (20) 51 44 14
Telex: 820744

GERMAN FEDERAL REPUBLIC
Hewlett-Packard GmbH
Vertriebszentrale Frankfurt
Bernerstrasse 117
Posttach 560 140
D-6000 **Frankfurt** 56
Tel: (0611) 50 04-1
Cable: HEWPACKSA Frankfurt
Telex: 04 13249 hpffmd

Hewlett-Packard GmbH
Technisches Buero Böblingen
Herrenbergerstrasse 110
D-7030 **Böblingen**, Wurttemberg
Tel: (07031) 667-1
Cable: HEPAK Böblingen
Telex: 07265739 bbn

Hewlett-Packard GmbH
Technisches Buero Dusseldorf
Emanuel-Leutze-Str. 1 (Seestern)
D-4000 **Dusseldorf**
Tel: (0211) 59 71-1
Telex: 085/86 533 hpdd d

Hewlett-Packard GmbH
Technisches Buero Hamburg
Wendenstrasse 23
D-2000 **Hamburg** 1
Tel: (040) 24 13 93
Cable: HEWPACKSA Hamburg
Telex: 21 63 032 hphh d

Hewlett-Packard GmbH
Technisches Buero Hannover
Am Grossmarkt 6
D-3000 **Hannover 91**
Tel: (0511) 46 60 01
Telex: 092 3259

Hewlett-Packard GmbH
Technisches Buero Nuremberg
Neumeyer Str. 90
D-8500 **Nuremberg**
Tel: (0911) 56 30 83/85
Telex: 0623 860

Hewlett-Packard GmbH
Technisches Buero München
Unterhachinger Strasse 28
ISAR Center
D-8012 **Ottobrunn**
Tel: (089) 601 30 61/7
Cable: HEWPACKSA München
Telex: 0524985

Hewlett-Packard GmbH
Technisches Buero Berlin
Keith Strasse 2-4
D-1000 **Berlin** 30
Tel: (030) 24 90 86
Telex: 18 3405 hpbln d

GREECE
Kostas Karayannis
18, Ermou Street
GR-**Athens** 126
Tel: 3237731
Cable: RAKAR Athens
Telex: 21 59 62 rkar gr

Analytical Only
INTECO
G. Papathanassiou & Co
Marni 17
GR - **Athens** 103
Tel: 522 1915
Cable: INTEKNIKA Athens
Telex: 21 5329 INTE GR

Medical Only
Technomed Hellas Ltd.
52,Skoufa Street
GR - **Athens** 135
Tel: 362 6972, 363 3830
Cable etalak athens
Telex: 21-4693 ETAL GR

HUNGARY
MTA
Muszerügyi és Méréstechnikai
Szolgalata
Lenin Krt. 67
1391 **Budapest** VI
Tel: 42 03 38
Telex: 22 51 14

ICELAND
Medical Only
Elding Trading Company Inc.
Hafnarhvoli - Tryggvatotu
IS-**Reykjavik**
Tel: 1 58 20
Cable: ELDING Reykjavik

IRAN
Hewlett-Packard Iran Ltd.
No. 13, Fourteenth St
Miremad Avenue
P.O. Box 41/2419
IR-**Tehran**
Tel: 851082-7
Telex: 213405 HEWP IR

IRELAND
Hewlett-Packard Ltd.
King Street Lane
GB-**Winnersh**,Wokingham
Berks. RG11 5AR
Tel: (0734) 78 47 74
Telex: 847178

ITALY
Hewlett-Packard Italiana S.p.A.
Casella postale 3645
I-20100 **Milano**
Tel: (2) 6251 (10 lines)
Cable: HEWPACKIT Milano
Telex: 32046

Hewlett-Packard Italiana S.p.A.
Via Pietro Maroncelli 40
(ang. Via Visentin)
I-35100 **Padova**
Tel: (49) 66 48 88
Telex: 41612 Hewpacki

Medical only
Hewlett-Packard Italiana S.p.A.
Via d'Aghiardi, 7
I-56100 **Pisa**
Tel: (050) 2 32 04
Telex: 32046 via Milano

Hewlett-Packard Italiana S.p.A.
Via G. Armellini 10
I-00143 **Roma**
Tel: (06) 54 69 61
Telex: 61514
Cable: HEWPACKIT Roma

Hewlett-Packard Italiana S.p.A.
Via San Quintino, 46
I-10121 **Torino**
Tel: (011) 52 82 64/54 84 68
Telex: 32046 via Milano

Medical/Calculators Only
Hewlett-Packard Italiana S.p.A.
Via Principe Nicola 43 G/C
I-95126 **Catania**
Tel:(095) 37 05 04

Hewlett-Packard Italiana S.p.A.
Via Amerigo Vespucci, 9
I-80142 **Napoli**
Tel: (081) 33 77 11

Hewlett-Packard Italiana S.p.A.
Via E. Masi, 9/B
I-40137 **Bologna**
Tel: (051) 30 78 87

KUWAIT
Al-Khaldiya Trading &
Contracting Co.
P.O. Box 830
Kuwait
Tel: 42 49 10
Cable: VISCOUNT

LUXEMBURG
Hewlett-Packard Benelux
S.A./N.V.
Avenue du Col-Vert, 1,
(Groenkraaglaan)
B-1170 **Brusaels**
Tel: (02) 672 22 40
Cable: PALOBEN Brussels
Telex: 23 494

MOROCCO
Gerep
190, Blvd. Brahim Roudani
Casablanca
Tel: 25-16-76/25-90-99
Cable: Gerep-Casa
Telex: 23739

NETHERLANDS
Hewlett-Packard Benelux N.V.
Van Heuven Goedhartlaan 121
P.O. Box 667
NL- **Amstelveen** 1134
Tel: (020) 47 20 21
Cable: PALOBEN Amsterdam
Telex: 13 216 hepa nl

NORWAY
Hewlett-Packard Norge A/S
Nesveien 13
Box 149
N-1344 **Haslum**
Tel: (02) 53 83 60
Telex: 16621 hpnas n

POLAND
Biuro Informacji Technicznej
Hewlett-Packard
Ul. Stawki 2 6P
00-950**Warsaw**
Tel: 39 67 43
Telex: 81 24 53 hepa pl

UNIPAN
Zaklad Doswiadczalny
Budowy Aparatury Naukowej
Ul. Krajowej Rady
Narodowej 51/55
00-800 **Warsaw**
Tel: 20 62 21
Telex: 81 46 48

Zaklady Naprawcze Sprzetu
Medycznego
Plac Komuny Paryskiej 6
90-007 **Lodz**
Tel: 334-41, 337-83

PORTUGAL
Telectra-Empresa Técnica de
Equipamentos Eléctricos S.a.r.l.
Rua Rodrigo da Fonseca 103
P.O. Box 2531
P-**Liabon** 1
Tel: (19) 68 60 72
Cable: TELECTRA Lisbon
Telex: 12598

Medical only
Mundinter
Intercambio Mundial de Comércio
S.a.r.l.
Av.A.A.de Aguiar 138
P.O. Box 2761
P - **Lisbon**
Tel: (19) 53 21 31/7
Cable: INTERCAMBIO Lisbon

RUMANIA
Hewlett-Packard Reprezentanta
BO.N. Balcescu 16
Bucharest
Tel: 158023/138885
Telex: 10440

I.I.R.U.C.
Intreprinderea Pentru
Intretinerea
Si Repararea Utilajelor de Calcul
B-dul prof. Dimitrie Pompei 6
Bucharest-Sectorul 2
Tel: 12 64 30
Telex: 01183716

SAUDI ARABIA
Modern Electronic Establishment
King Abdul Aziz str.(Head office)
P.O. Box 1228
Jeddah
Tel: 31173-332201
Cable: ELECTRA

P.O. Box 2728 (Service center)
Riyadh
Tel: 62596-66232
Cable: RAOUFCO

SPAIN
Hewlett-Packard Española, S.A.
Jerez No. 3
E-**Madrid** 16
Tel:(1) 458 26 00 (10 lines)
Telex: 23515 hpe

Hewlett-Packard Española, S.A.
Milanesado 21-23
E-**Barcelona** 17
Tel: (3) 203 6200 (5 lines)
Telex: 52603 hpbe e

Hewlett-Packard Española, S.A.
Av.Ramdn y Cajal, 1-9
(Edificio Sevilla I)
E-**Seville** 5
Tel: 64 44 54/58

Hewlett-Packard Española S.A.
Edificio Albia II 7° B
E-**Bilbao**-1
Tel: 23 83 06/23 82 06

Calculators Only
Hewlett-Packard Española S.A.
Gran Via Fernando El Catdlico, 67
E-**Valencia**-8
Tel: 326 67 28/326 85 55

SWEDEN
Hewlett-Packard Sverige AB
Enighetsvägen 3
Fack
S-161 20 **Bromma** 20
Tel: (08) 730 05 50
Cable: MEASUREMENTS
Stockholm
Telex: 10721

Hewlett-Packard Sverige AB
Frötallsgatan 30
S-421 32 **Vastra Frölunda**
Tel: (031) 49 09 50
Telex: 10721 Via Bromma Office

SWITZERLAND
Hewlett-Packard (Schweiz) AG
Zurcherstrasse 20
P.O. Box 307
CH-8952 **Schlieren-Zurich**
Tel: (01) 730 52 40
Cable: HPAG CH
Telex: 53933 hpag ch

Hewlett-Packard (Schweiz) AG
Château Bloc 19
CH-1219 **Le Lignon-Geneva**
Tel: (022) 96 03 22
Cable: HEWPACKAG Geneva
Telex: 27 333 hpag ch

SYRIA
Medical/Calculator only
Sawah & Co.
Place Azmé
B.P. 2308
SYR-**Damascus**
Tel: 16367, 19697, 14268
Cable: SAWAH, Damascus

TURKEY
Telekom Engineering Bureau
P.O. Box 437
Beyoglu
TR-**Istanbul**
Tel: 49 40 40
Cable: TELEMATION Istanbul
Telex: 23609

Medical only
E.M.A.
Muhendislik Kollektif Sirketi
Adakale Sokak 41/6
TR-**Ankara**
Tel: 175622

Analytical only
Yilmaz Ozyurek
Milli Mudafaa Cad No. 16/6
Kizilay
TR-**Ankara**
Tel: 25 03 09
Telex: 42576 Ozek tr

UNITED KINGDOM
Hewlett-Packard Ltd.
King Street Lane
GB-**Winnersh**, Wokingham
Berks. RG11 5AR
Tel: (0734) 78 47 74
Cable: Hewpie London
Telex:847178/9

Hewlett-Packard Ltd.
"The Graffons"
Stamford New Road
GB-**Altrincham**
Cheshire WA14 IDO
Tel: (061) 9289021
Cable: Hewpie Manchester
Telex: 668068

Hewlett-Packard Ltd.
Lygon Court
Dudley Road
GB-**Halesowen**, Worcs
Tel: (021) 550 9911
Telex: 339105

Hewlett-Packard Ltd
Wedge House
799, London Road
GB-**Thornton Heath**
Surrey CR4 6XL
Tel: (01) 6640103
Telex: 946825

Hewlett-Packard Ltd.
c/o Makro
South Service Wholesale Centre
Wear Industrial Estate
Washington
GB-**New Town**, County Durham
Tel: Washington 464001 ext. 57/58

Hewlett-Packard Ltd
10, Wesley St.
GB-**Castleford**
West Yorkshire WF10 1AE
Tel: (09775) 50402
Telex: 557355

Hewlett-Packard Ltd
1, Wallace Way
GB-**Hitchin**
Herts
Tel: (0462) 52824/56704
Telex: 825981

USSR
Hewlett-Packard
Representative Office USSR
Pokrovsky Boulevard 4/17-KV 12
Moscow 101000
Tel:294-2024
Telex: 7825 hewpak su

YUGOSLAVIA
Iskra-standard/Hewlett-Packard
Miklosiceva 38/VII
61000 **Ljubljana**
Tel: 31 58 79/32 16 74
Telex: 31300

SOCIALIST COUNTRIES NOT SHOWN PLEASE CONTACT:
Hewlett-Packard Ges.m.b.H.
P.O. Box 7
A-1205 **Vienna**, Austria
Tel: (0222) 35 16 21 to 27
Cable: HEWPAK Vienna
Telex: 75923 hewpak a

MEDITERRANEAN AND MIDDLE EAST COUNTRIES NOT SHOWN PLEASE CONTACT:
Hewlett-Packard S.A.
Mediterranean and Middle
East Operations
35, Kolokotroni Street
Platia Kefallariou
GR-Kifissia-**Athens**, Greece
Tel: 8080337/359/429
8081741/742/743/744
Telex: 21-6588
Cable: HEWPACKSA Athens

FOR OTHER AREAS NOT LISTED CONTACT
Hewlett-Packard S.A.
7, rue du Bois-du-Lan
P.O. Box
CH-1217 Meyrin 2 - **Geneva**
Switzerland
Tel: (022) 41 54 00

UNITED STATES

ALABAMA
8290 Whitesburg Dr., S.E.
P.O. Box 4207
Huntsville 35802
Tel: (205) 881-4591

Medical Only
228 W. Valley Ave.
Room 220
Birmingham 35209
Tel: (205) 942-2081

ARIZONA
2336 E. Magnolia St.
Phoenix 85034
Tel: (602) 244-1361

2424 East Aragon Rd.
Tucson 85706
Tel: (602) 294-3148

***ARKANSAS**
Medical Service Only
P.O. Box 5646
Brady Station
Little Rock 72205
Tel: (501) 664-8773

CALIFORNIA
1430 East Orangethorpe Ave.
Fullerton 92631
Tel: (714) 870-1000

3939 Lankershim Boulevard
North Hollywood 91604
Tel: (213) 877-1282
TWX: 910-499-2170

6305 Arizona Place
Los Angeles 90045
Tel: (213) 649-2511
TWX: 910-328-6147

***Los Angeles**
Tel: (213) 776-7500

3003 Scott Boulevard
Santa Clara 95050
Tel: (408) 249-7000
TWX: 910-338-0518

***Ridgecrest**
Tel: (714) 446-6165

646 W. North Market Blvd.
Sacramento 95834
Tel: (916) 929-7222

9606 Aero Drive
P.O. Box 23333
San Diego 92123
Tel: (714) 279-3200

COLORADO
5600 South Ulster Parkway
Englewood 80110
Tel: (303) 771-3455

CONNECTICUT
12 Lunar Drive
New Haven 06525
Tel: (203) 389-6551
TWX: 710-465-2029

FLORIDA
P.O. Box 24210
2806 W. Oakland Park Blvd.
Ft. Lauderdale 33307
Tel: (305) 731-2020

***Jacksonville**
Medical Service only
Tel: (904) 725-6333

P.O. Box 13910
6177 Lake Ellenor Dr.
Orlando 32809
Tel: (305) 859-2900

P.O. Box 12826
Pensacola 32575
Tel: (904) 434-3081

GEORGIA
P.O. Box 105005
Atlanta 30348
Tel: (404) 955-1500
TWX 810-766-4890

Medical Service Only
***Augusta** 30903
Tel: (404) 736-0592

HAWAII
2875 So. King Street
Honolulu 96814
Tel: (808) 955-4455

ILLINOIS
5201 Tollview Dr.
Rolling Meadows 60008
Tel: (312) 255-9800
TWX: 910-687-2260

INDIANA
7301 North Shadeland Ave.
Indianapolis46250
Tel: (317)842-1000
TWX: 810-260-1797

IOWA
1902 Broadway
Iowa City 52240
Tel: (319) 338-9466
Night: (319) 338-9467

KENTUCKY
Medical Only
Atkinson Square
3901 Atkinson Dr.
Suite 207
Louisville 40218
Tel: (502) 456-1573

LOUISIANA
P.O. Box 840
3239 Williams Boulevard
Kenner 70062
Tel: (504) 721-6201

MARYLAND
6707 Whitestone Road
Baltimore 21207
Tel: (301) 944-5400
TWX: 710-862-9157

2 Choke Cherry Road
Rockville 20850
Tel: (301) 948-6370
TWX: 710-828-9684

MASSACHUSETTS
32 Hartwell Ave.
Lexington 02173
Tel: (617) 861-8960
TWX: 710-326-6904

MICHIGAN
23855 Research Drive
Farmington Hills 48024
Tel: (313) 476-6400
TWX: 810-242-2900

MINNESOTA
2400 N. Prior Ave.
Roseville 55113
Tel: (612) 636-0700
TWX: 910-563-3734

MISSISSIPPI
***Jackson**
Medical Service only
Tel: (601) 982-9363

MISSOURI
11131 Colorado Ave.
Kansas City 64137
Tel: (816) 763-8000
TWX: 910-771-2087

148 Weldon Parkway
Maryland Heights 63043
Tel: (314) 567-1455
TWX: 910-764-0830

NEBRASKA
Medical Only
7171 Mercy Road
Suite 110
Omaha 68106
Tel: (402) 392-0948

NEW JERSEY
W. 120 Century Rd.
Paramus 07652
Tel: (201) 265-5000
TWX: 710-990-4951

NEW MEXICO
P.O. Box 11634
Station E
11300 Lomas Blvd., N.E.
Albuquerque 87123
Tel: (505) 292-1330
TWX: 910-989-1185

156 Wyatt Drive
Las Cruces 88001
Tel: (505) 526-2485
TWX: 910-983-0550

NEW YORK
6 Automation Lane
Computer Park
Albany 12205
Tel: (518) 458-1550

201 South Avenue
Poughkeepsie 12601
Tel: (914) 454-7330
TWX: 510-248-0012

39 Saginaw Drive
Rochester 14623
Tel: (716) 473-9500
TWX: 510-253-5981

5858 East Molloy Road
Syracuse 13211
Tel: (315) 454-2486

1 Crossways Park West
Woodbury 11797
Tel: (516) 921-0300
TWX: 710-990-4951

NORTH CAROLINA
P.O. Box 5188
1923 North Main Street
High Point 27262
Tel: (919) 885-8101

OHIO
16500 Sprague Road
Cleveland 44130
Tel: (216) 243-7300
TWX: 810-423-9431

330 Progress Rd.
Dayton 45449
Tel: (513) 859-8202
TWX: 810-474-2818

1041 Kingsmill Parkway
Columbus 43229
Tel: (614) 436-1041

OKLAHOMA
P.O. Box 32008
Oklahoma City 73132
Tel: (405) 721-0200

OREGON
17890 SW Lower Boones
Ferry Road
Tualatin 97062
Tel: (503) 620-3350

PENNSYLVANIA
111 Zeta Drive
Pittsburgh 15238
Tel: (412) 782-0400
TWX: 710-795-3124

1021 8th Avenue
King of Prussia Industrial Park
King of Prussia 19406
Tel: (215) 265-7000
TWX: 510-660-2670

SOUTH CAROLINA
6941-0 N. Trenholm Road
Columbia 29260
Tel: (803) 782-6493

TENNESSEE
***Knoxville**
Medical Services only
Tel: (615) 523-5022

1473 Madison Avenue
Memphis 38104
Tel: (901) 274-7472

Nashville
Medical Service only
Tel: (615) 244-5448

TEXAS
P.O. Box 1270
201 E. Arapaho Rd.
Richardson 75080
tel: (214) 231-6101

P.O. Box 27409
6300 Westpark Drive
Suite 100
Houston 77027
Tel: (713) 781-6000

205 Billy Mitchell Road
San Antonio 78226
Tel: (512) 434-8241

UTAH
2160 South 3270 West Street
Salt Lake City 84119
Tel: (801) 487-0715

VIRGINIA
Medical Only
P.O. Box 12778
No. 7 Koger Exec. Center
Suite 212
Norfolk 23502
Tel:(804) 497-1026/7

P.O. Box 9854
2914 Hungary Springs Road
Richmond 23228
Tel: (804) 285-3431

WASHINGTON
Bellefield Office Pk.
1203-114th Ave. S.E.
Bellevue 98004
Tel: (206) 454-3971
TWX: 910-443-2446

***WEST VIRGINIA**
Medical/Analytical Only
Charleston
Tel: (304) 345-1640

WISCONSIN
9004 West Lincoln Ave.
West Allis 53227
Tel: (414) 541-0550

FOR U.S. AREAS NOT LISTED:
Contact the regional office
nearest you: Atlanta, Georgia;
North Hollywood, California;
Rockville, Maryland; Rolling Meadows,
Illinois. Their complete
addresses are listed above.

***Service Only**

1/77