HP 9826

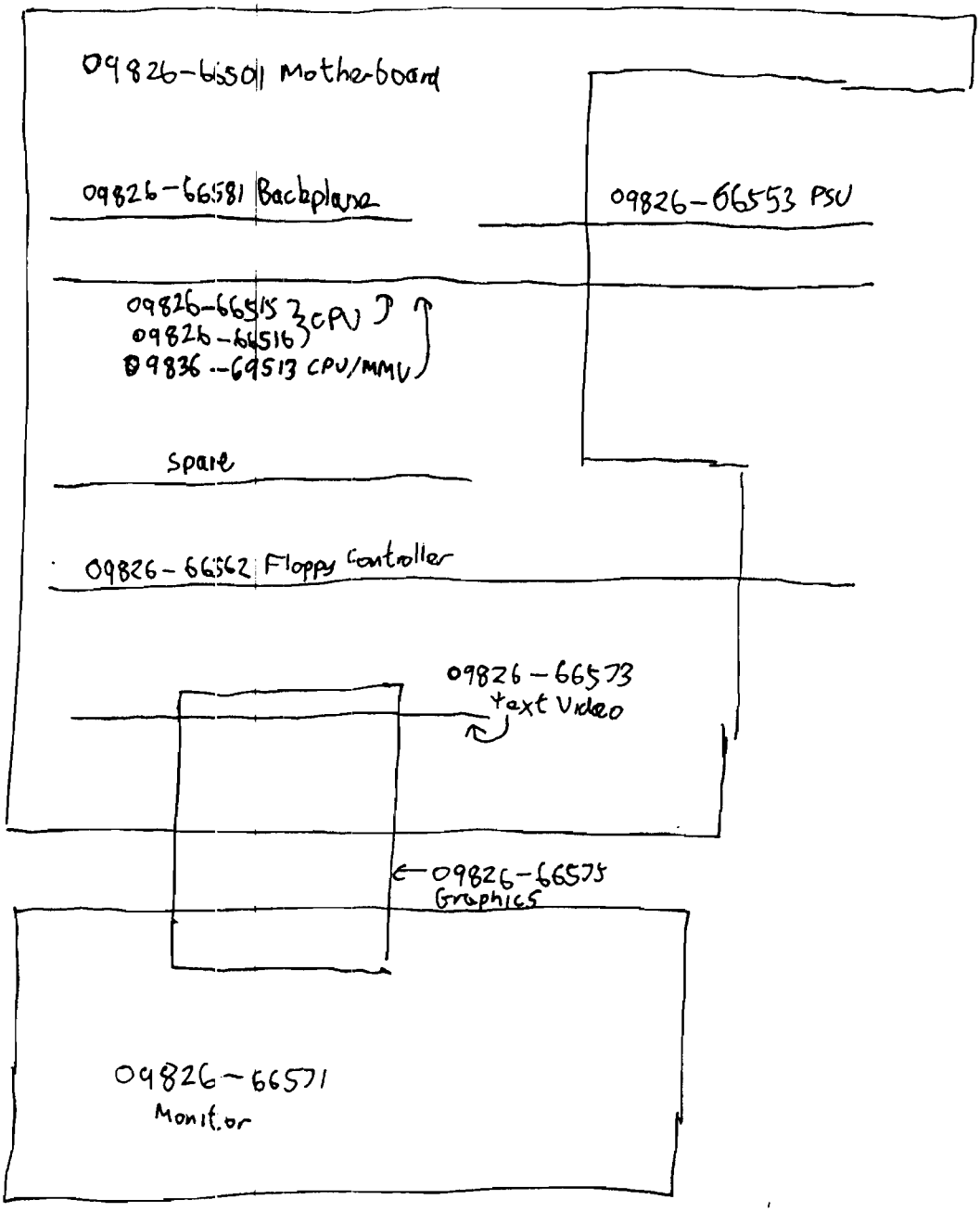
09826-66501 Mother-board
09826-66581 Backplane
09826-66553 PSU
09826-66515
09826-66516
CPU
09826--69513 CPU/MMU
Spare
09826-66562 Floppy Controller
09826-66573
Text Video
09826-66575
Graphics
09826-66571
Monitor

MP9836

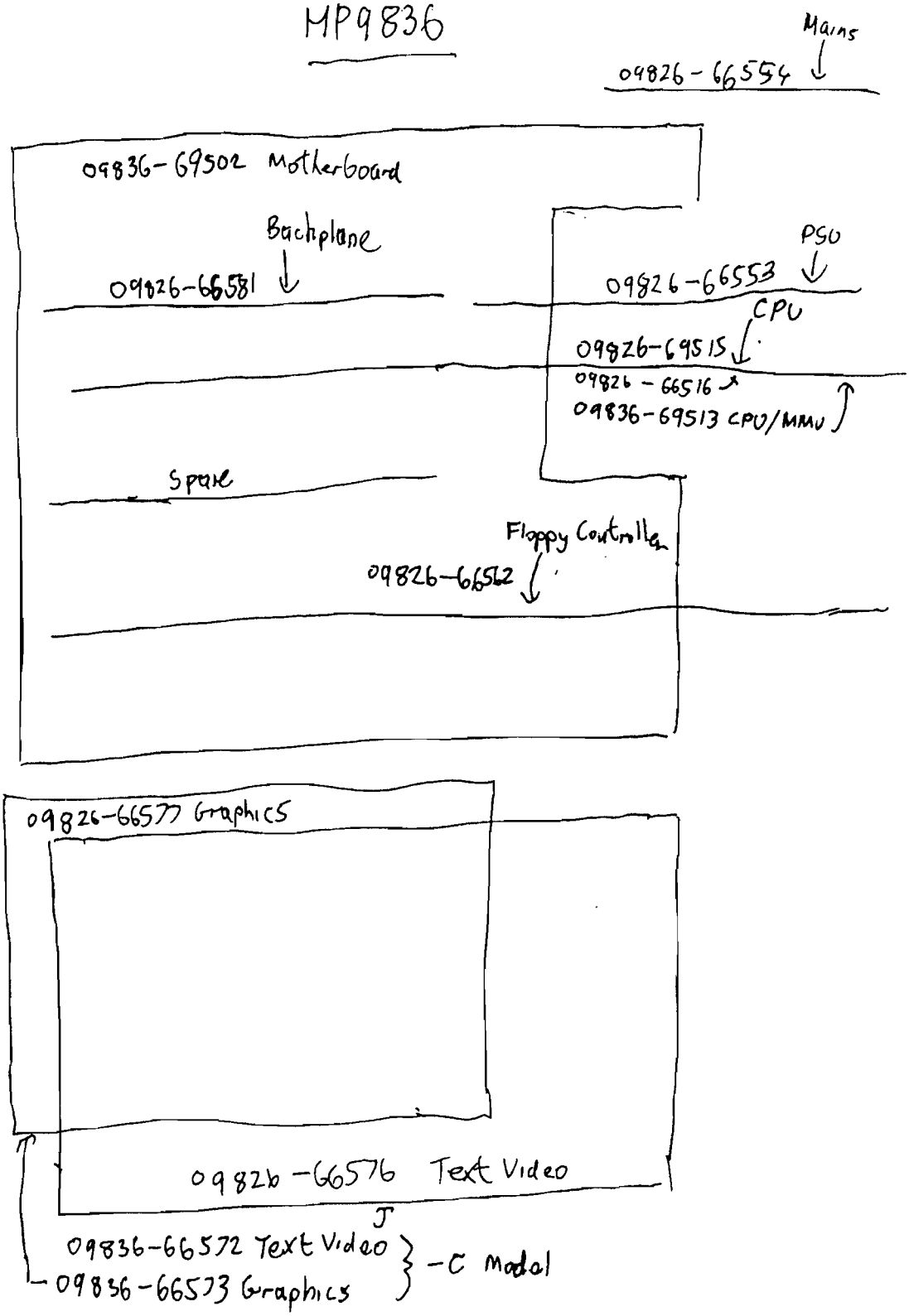
Mains
09826-66554
09836-69502 Motherboard
Backplane
09826-66581
PSU
09826-66553
CPU
09826-69515
09826-66516
09836-69513 CPU/MMU
Spare
Floppy Controller
09826-66562
09826-66577 Graphics
09826-66576 Text Video
09836-66572 Text Video
09836-66573 Graphics
-C Modal

HP9836C Monitor

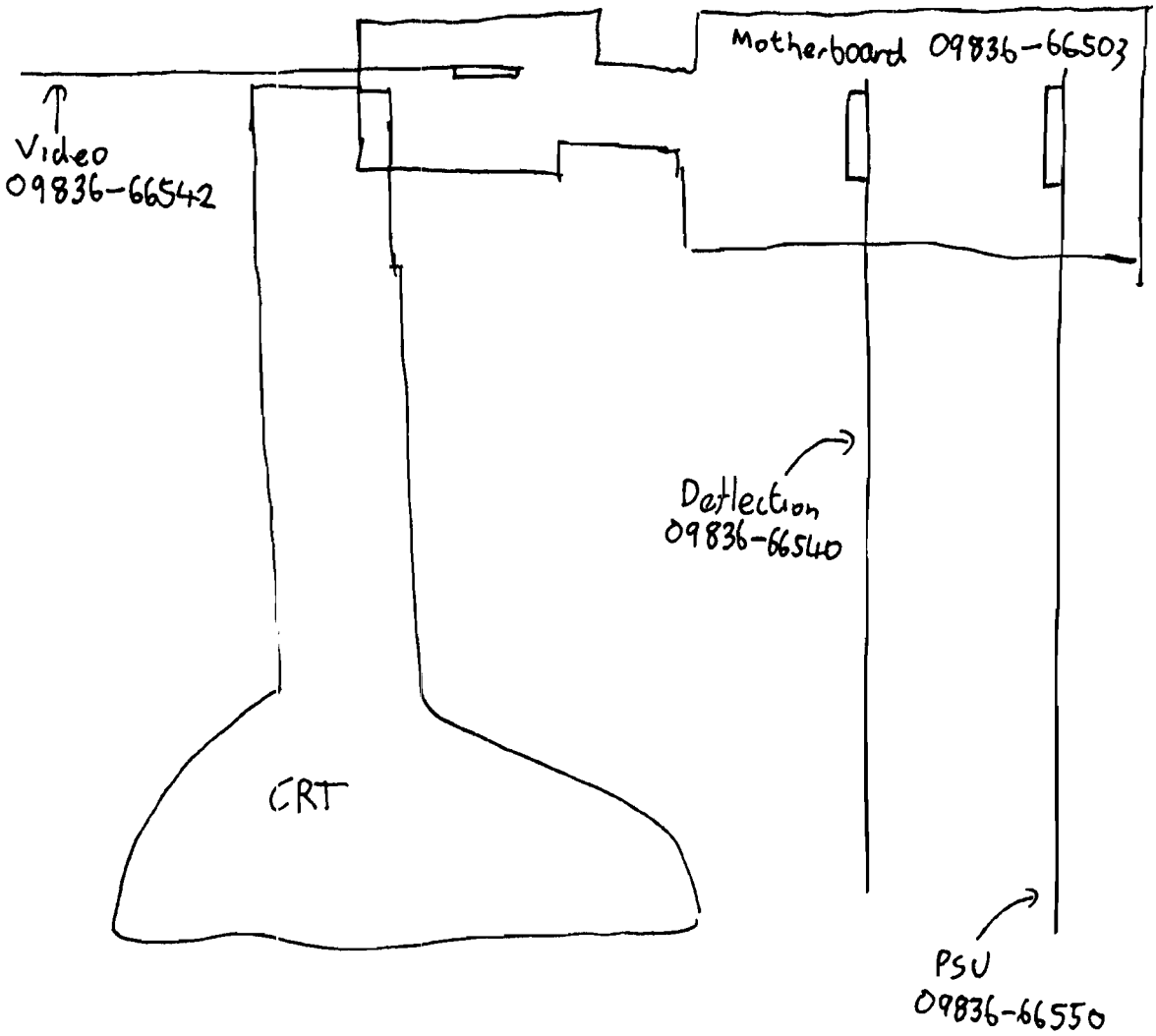

HP9826/ HP 9836 motherboard

1	2
DMARD	DMAR1
DMAck0	DMAck1
Spare0	IR7
IR2	IR1
DMARdy	BG1
BG2	BG3
Gnd	Gnd
IR4	IR3
IR6	IR5
Vector	IAck
Gnd	Gnd
BG	BR
Done	BGAck
Spare1	Spare2
BDRV	EndT
BFC0	BFC1
BFC2	DTAck
Gnd	Gnd
Reset	BErr
Gnd	Gnd
+5V	+5V
BLDS	BUDS
BR/W	BAS
Gnd	Gnd
Halt	BA1
BA2	BA3
BA4	BA5
BA6	BA7
BA8	BA9
BA10	BA11
Gnd	Gnd
BA12	BA13
BA14	BA15
BA16	BA17
BA18	BA19
BA20	BA21
BA22	BA23
Gnd	Gnd
BD0	BD1
BD2	BD3
BD4	BD5
BD6	BD7
+5V	+5V
BD8	BD9
BD10	BD11
BD12	BD13
BD14	BD15
DGnd	DGnd
Spare3	Spare4
-12V	+12V
99	100

J2

Backplane

1	2
+5V	+5V
IR7	IOPage
IR2	IR1
Gnd	Gnd
+5V	VMA
VPA	EClk
Gnd	Gnd
IR4	IR3
IR6	IR5
Vector	IAck
Gnd	Gnd
BG	BR
Gnd	BGAck
BErr	Spare2
BDRV	EndT
BFC0	BFC1
BFC2	DTAck
Gnd	Gnd
Reset	PSURST
Gnd	Gnd
IOWr	IORd
BLDS	BUDS
BR/W	BAS
Gnd	Gnd
Halt	BA1
BA2	BA3
BA4	BA5
BA6	BA7
BA8	BA9
BA10	BA11
Gnd	Gnd
BA12	BA13
BA14	BA15
BA16	BA17
BA18	BA19
BA20	BA21
BA22	BA23
Gnd	Gnd
BD0	BD1
BD2	BD3
BD4	BD5
BD6	BD7
Gnd	Gnd
BD8	BD9
BD10	BD11
BD12	BD13
BD14	BD15
+5V	+5V
Spare3	Spare4
-12V	+12V
99	100

J3

CPU

HP9826/ HP9836 Motherboard

LHS ↑ Front

1	2
DMARO	DMARI
DMAchO	DMAchI
Spare0	IR7
IRI	IRI
DMARdy	BGI
BG2	BG3
Gnd	Gnd
IR4	IR3
IR6	IR5
Vector	TAckI
Gnd	Gnd
BG	BR
Done	BGAck
Spare1	Spare2
BDRU	EndT
BFC0	BFCI
BFC2	DTAck
Gnd	Gnd
Reset	BErr
Gnd	Gnd
BLDS	BUDS
BR/W	BAS
Gnd	Gnd
HaIE	BAI
BA2	BA3
BA4	BA5
BA6	BA7
BA8	BA9
BA10	BA11
Gnd	Gnd
BA12	BA13
BA14	BA15
BA16	BA17
BA18	BA19
BA20	BA21
BA22	BA23
Gnd	Gnd
BD0	BD1
BD2	BD3
BD4	BD5
BD6	BD7
+5V	+5V
BD8	BD9
BD10	BD11
BD12	BD13
BD14	BD15
DGnd	DGnd
Spare3	Spare4
−12V	+12V
99	100

J4

Spare

1	2
Gnd	clk10M
Gnd	Gnd
DMARO	DMARI
DMAchO	DMAchI
Gnd	Gnd
IR2	Disk55
+5V	+5V
DMARdy	IR3
IR6	IR5
Gnd	Gnd
BGI	BG3
BG2	BR
Done	BGAck
Spare1	Spare2
BDRU	EndT
BFC0	BFCI
BFC2	DTAck
Gnd	Gnd
Reset	BErr
Gnd	Gnd
IOWr	IORd
BLDS	BUDS
BR/W	BAS
Gnd	Gnd
HaIE	BAI
BA2	BA3
BA4	BA5
BA6	BA7
BA8	BA9
BA10	BA11
Gnd	Gnd
BA12	BA13
BA14	BA15
BA16	BA17
BA18	BA19
BA20	BA21
BA22	BA23
Gnd	Gnd
BD0	BD1
BD2	BD3
BD4	BD5
BD6	BD7
+5V	+5V
BD8	BD9
BD10	BD11
BD12	BD13
BD14	BD15
Gnd	Gnd
Spare3	Spare4
−12V	+12V
99	100

J5

Floppy Controller

HP9826 Motherboard

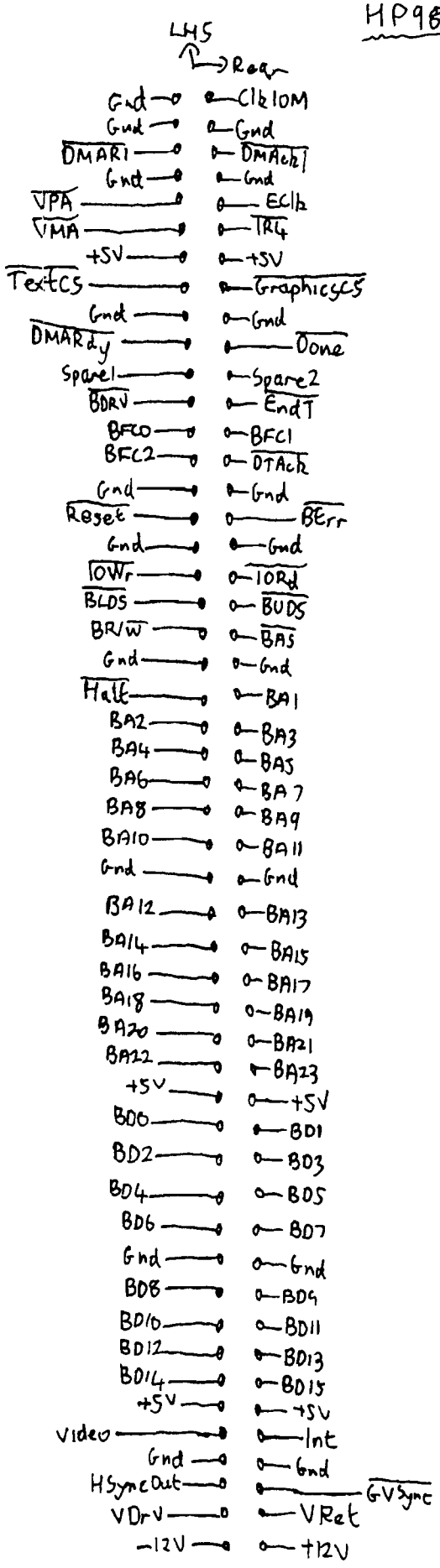

J6
Text Video

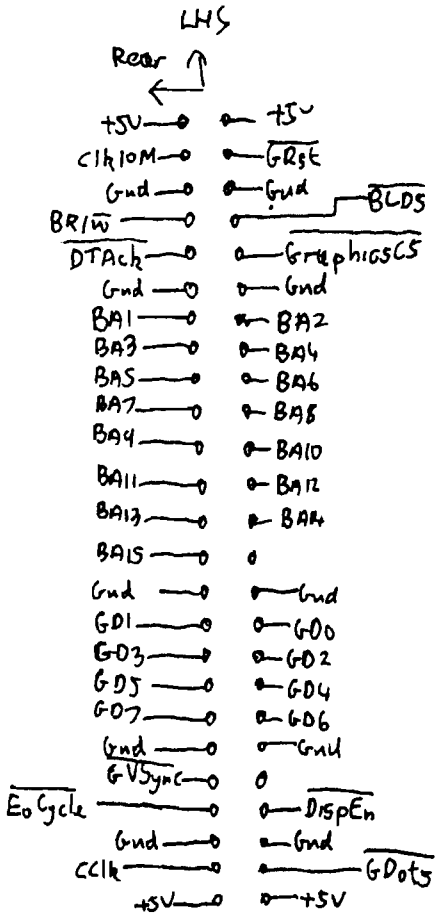

Text Video J2
(To Graphics PCB)

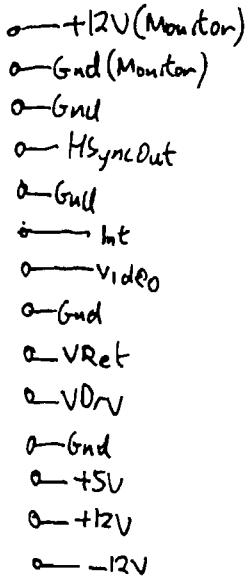

J7
Monitor

HP9836 Motherboard

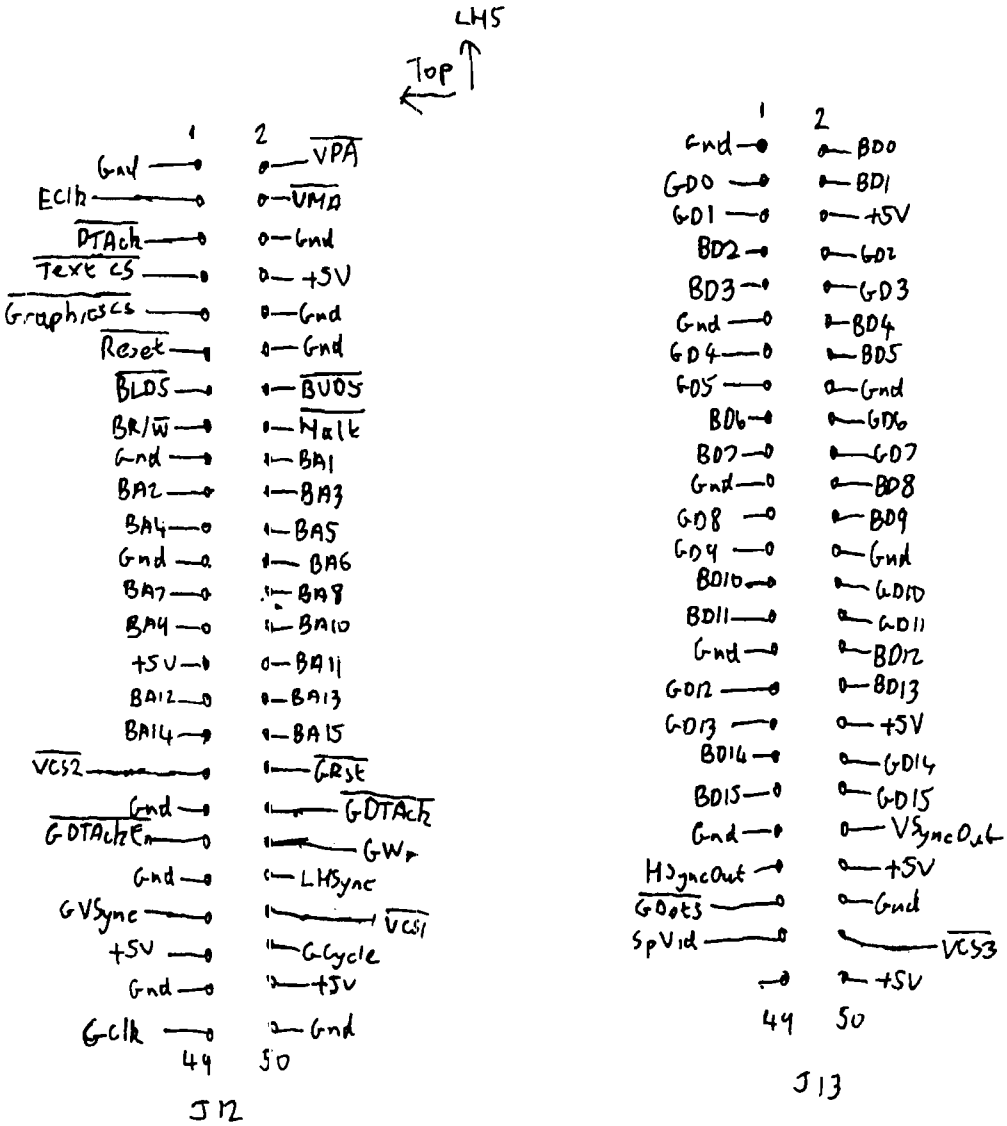

Video PCBs

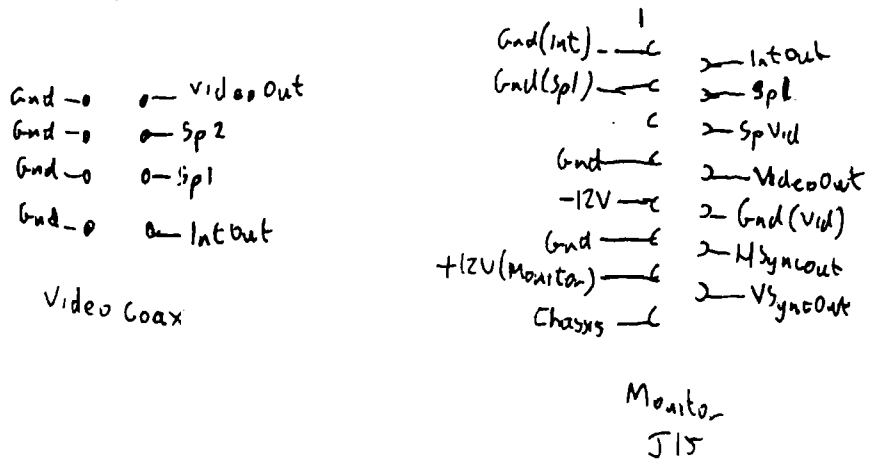

HP9836C Motherboard

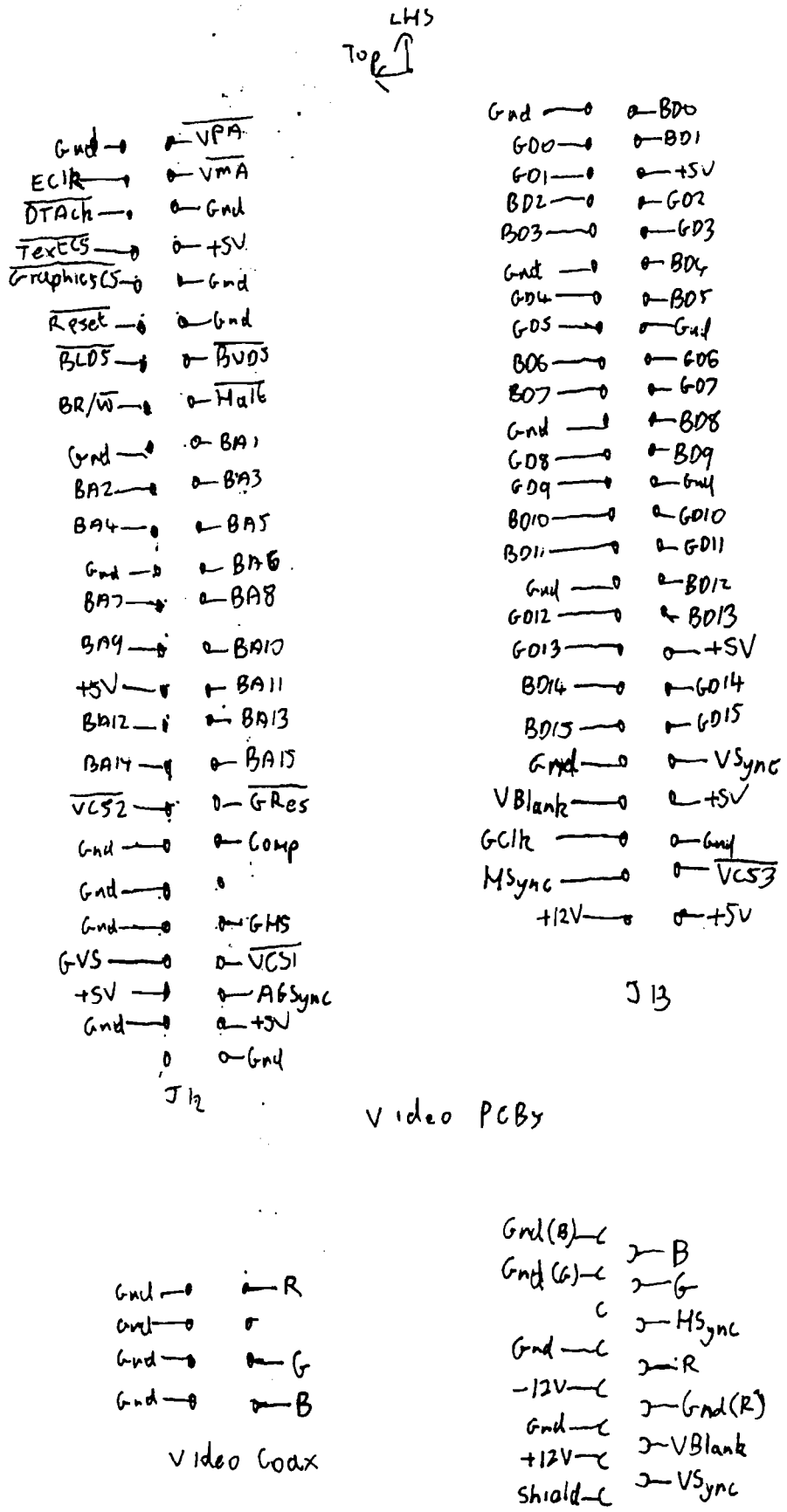

HP9835C

Video PCB Interconnett pins

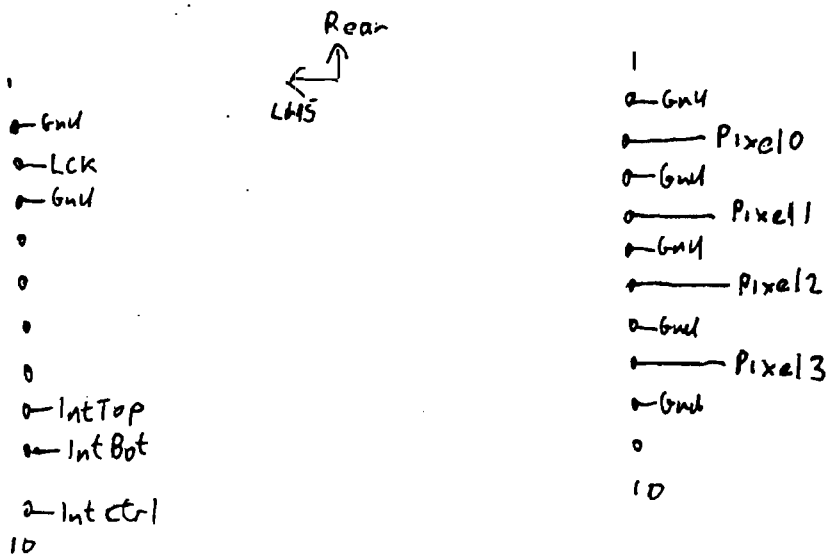

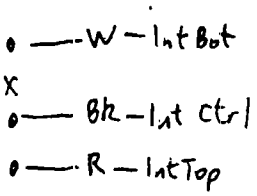

Graphics J3
Intensity Control

HP9826/ HP9836 Motherboard

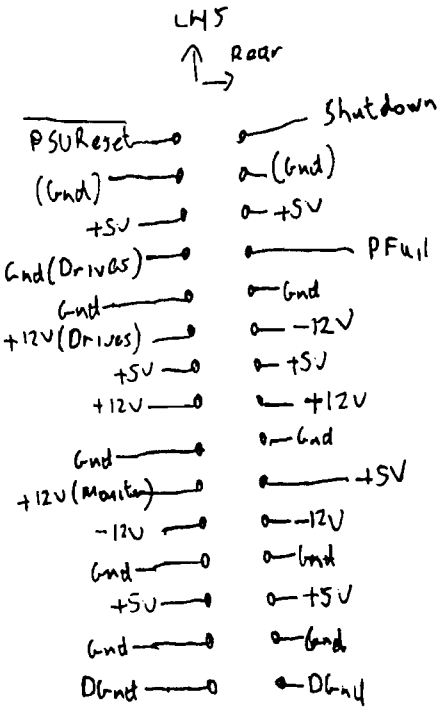

J8
PSU

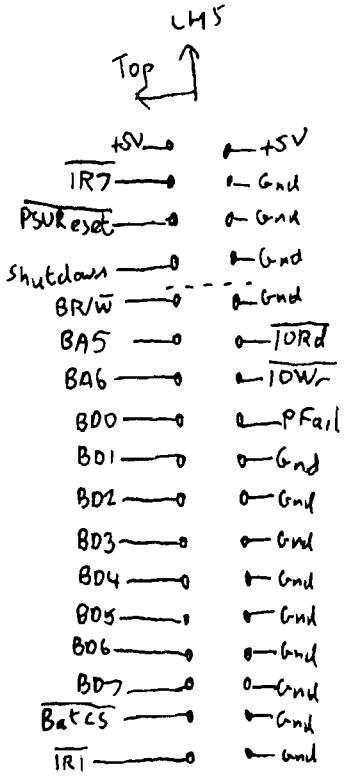

J10
Battery Backup

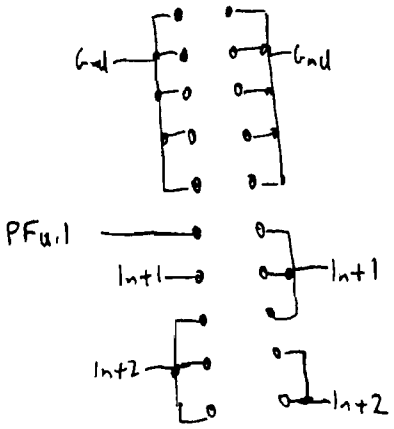

PSU Input

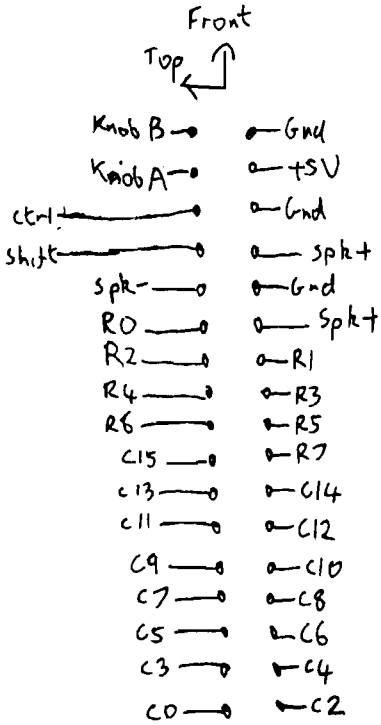

J11
Keyboard

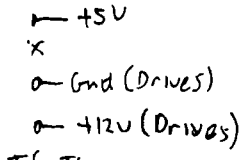

J6, J9
Floppy Power

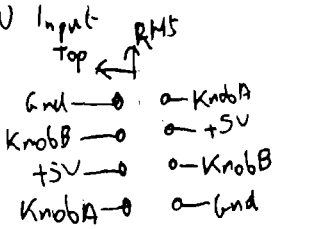

Shaft Encoder
to Keyboard PCB

HP9826 Monitor

HP9826 CRT Earthing

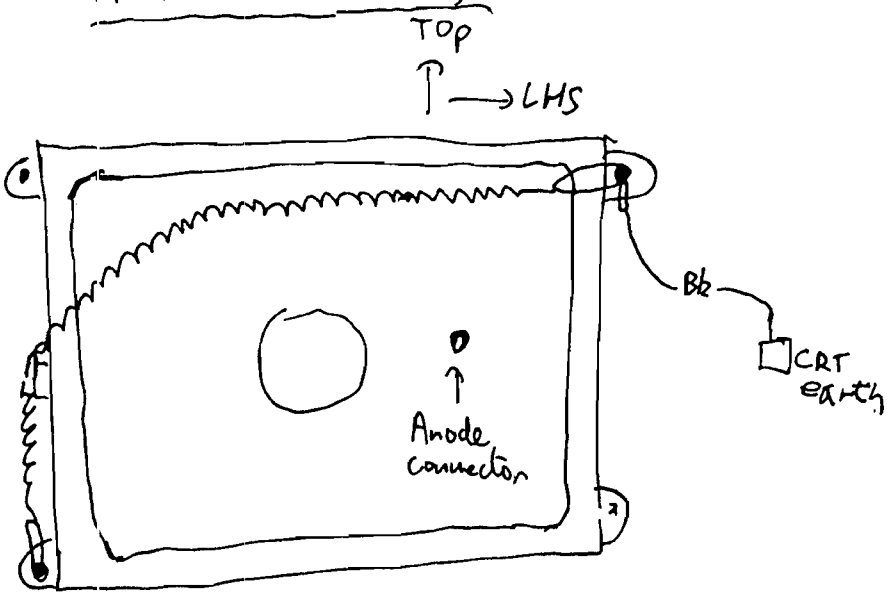

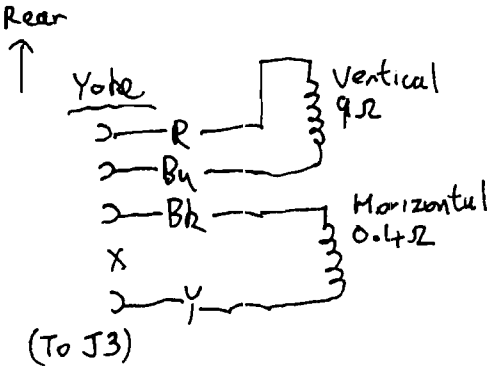

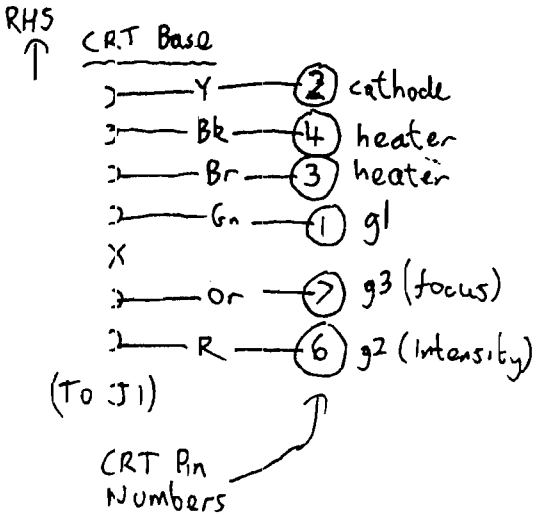

HP 9836 Monitor (09826-66580 PCB)

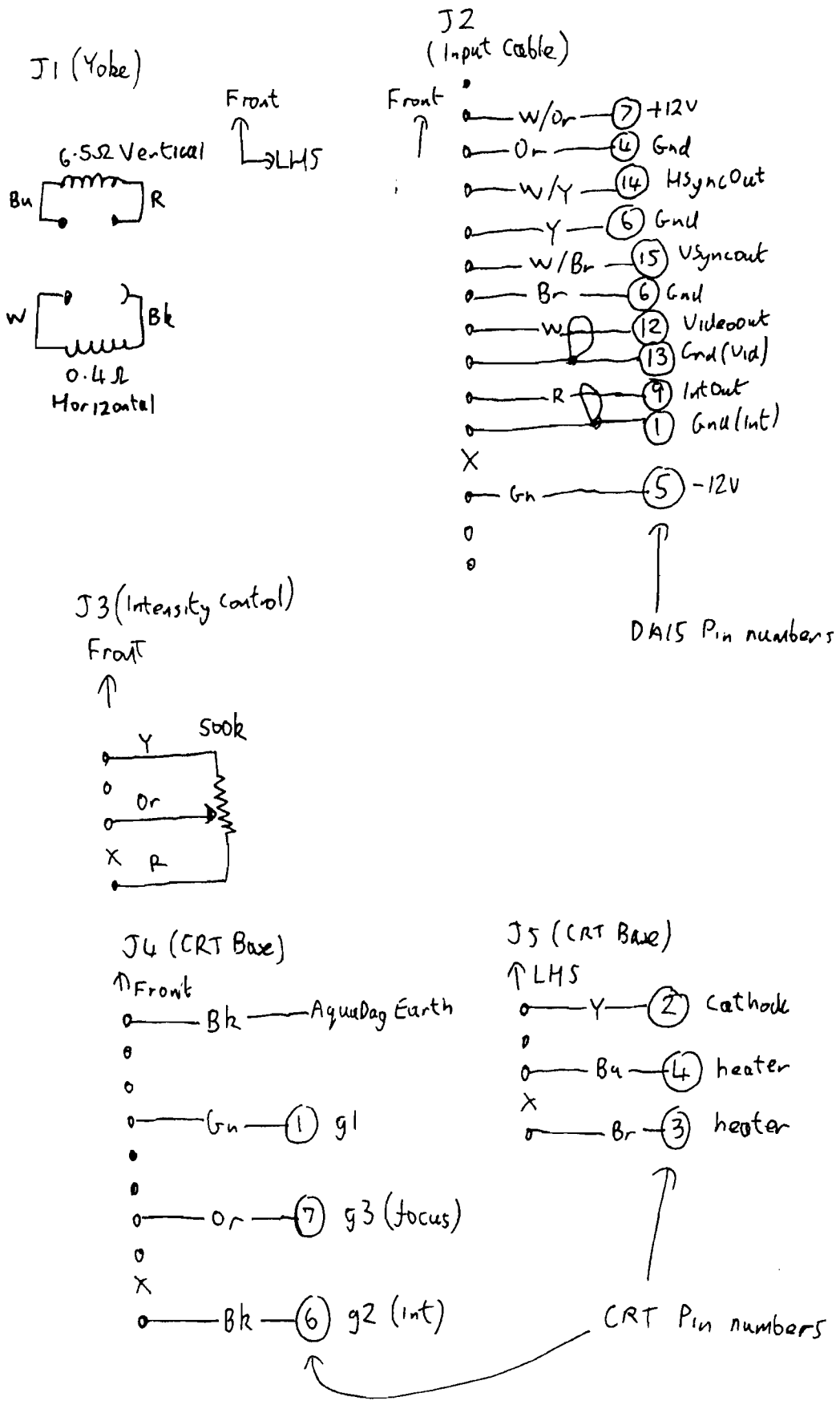

HP9836C Monitor

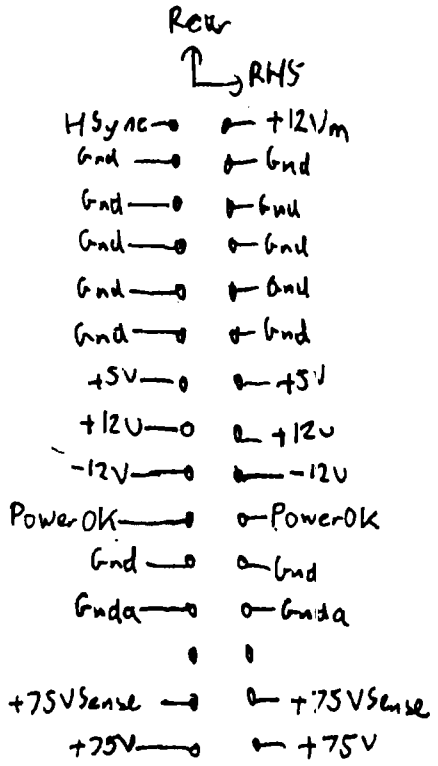

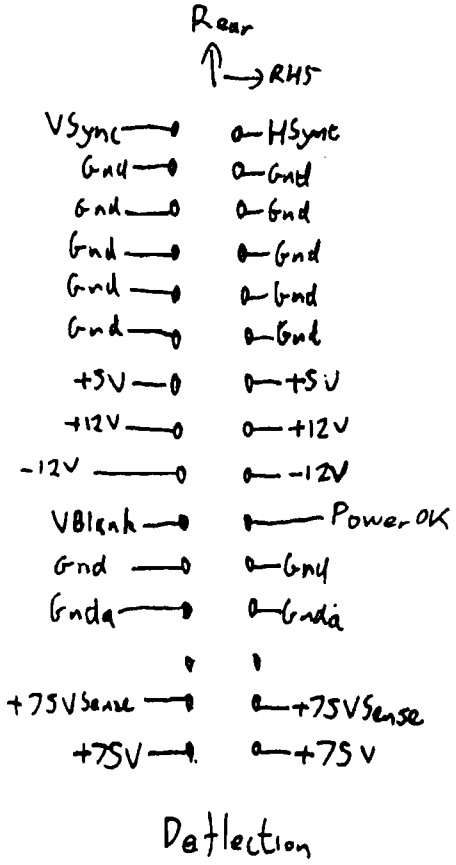

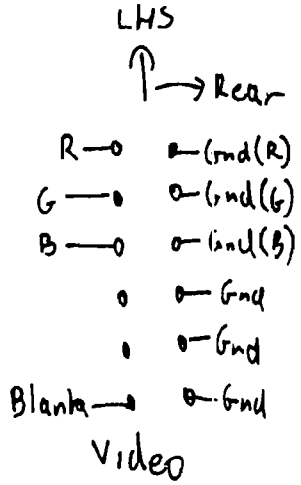

Motherboard Connectors

HP9836C Monitor

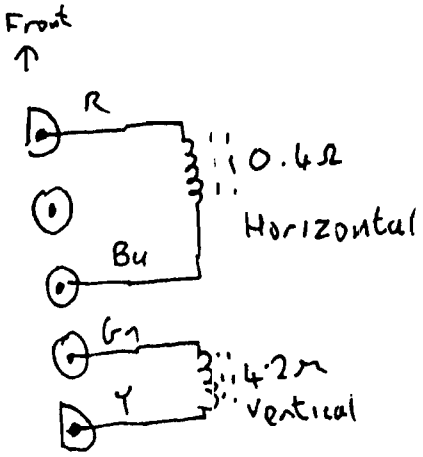

Deflection/J1
(Yoke)

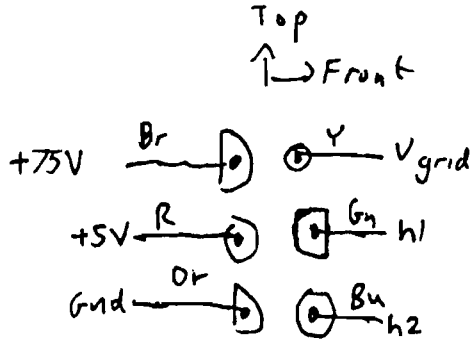

Deflection/J1Vid
(Video Power)

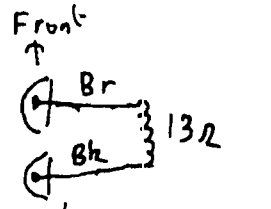

PSU/J3
(Degauss)

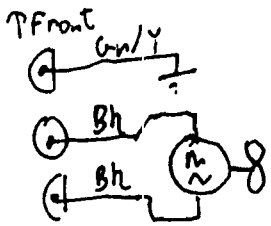

PSU/J2
(Fan)

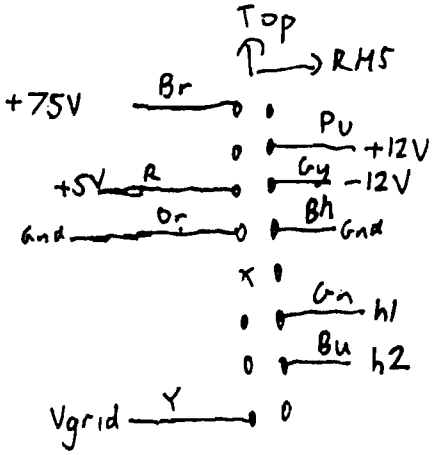

Video/P2
(Power)

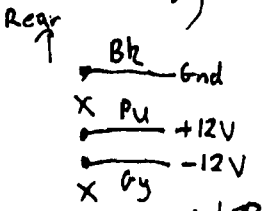

Mother-board/P3
(Video Power)

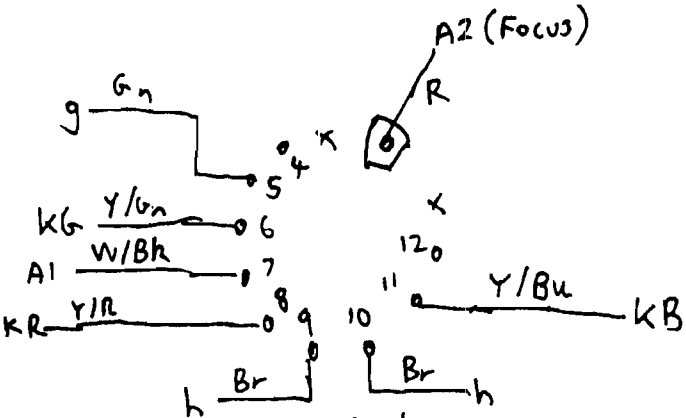

CRT Socket

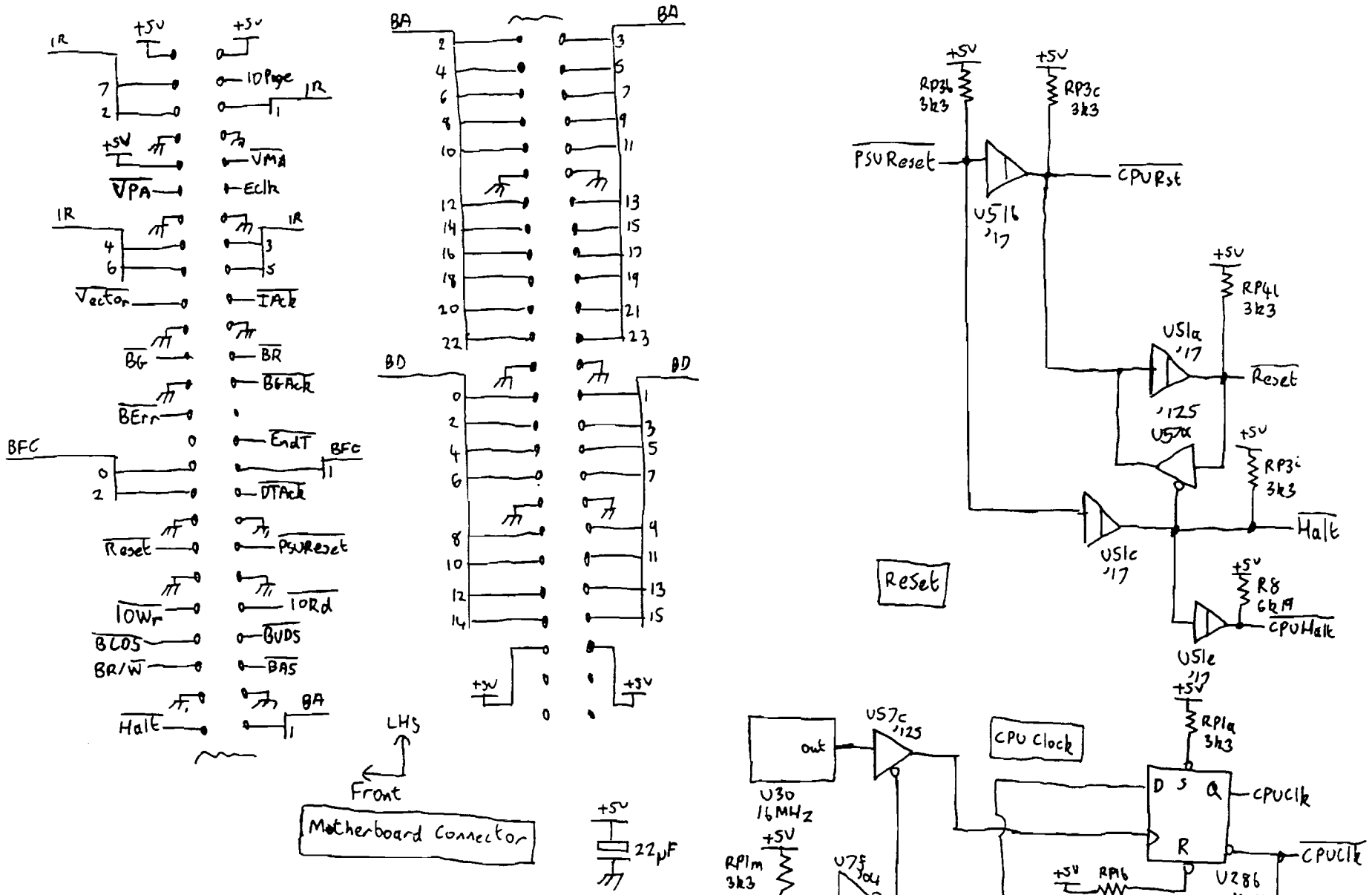

HP9826/HP9836 CPU PCB Sheet 1

09826-69515 (Br/Gn)

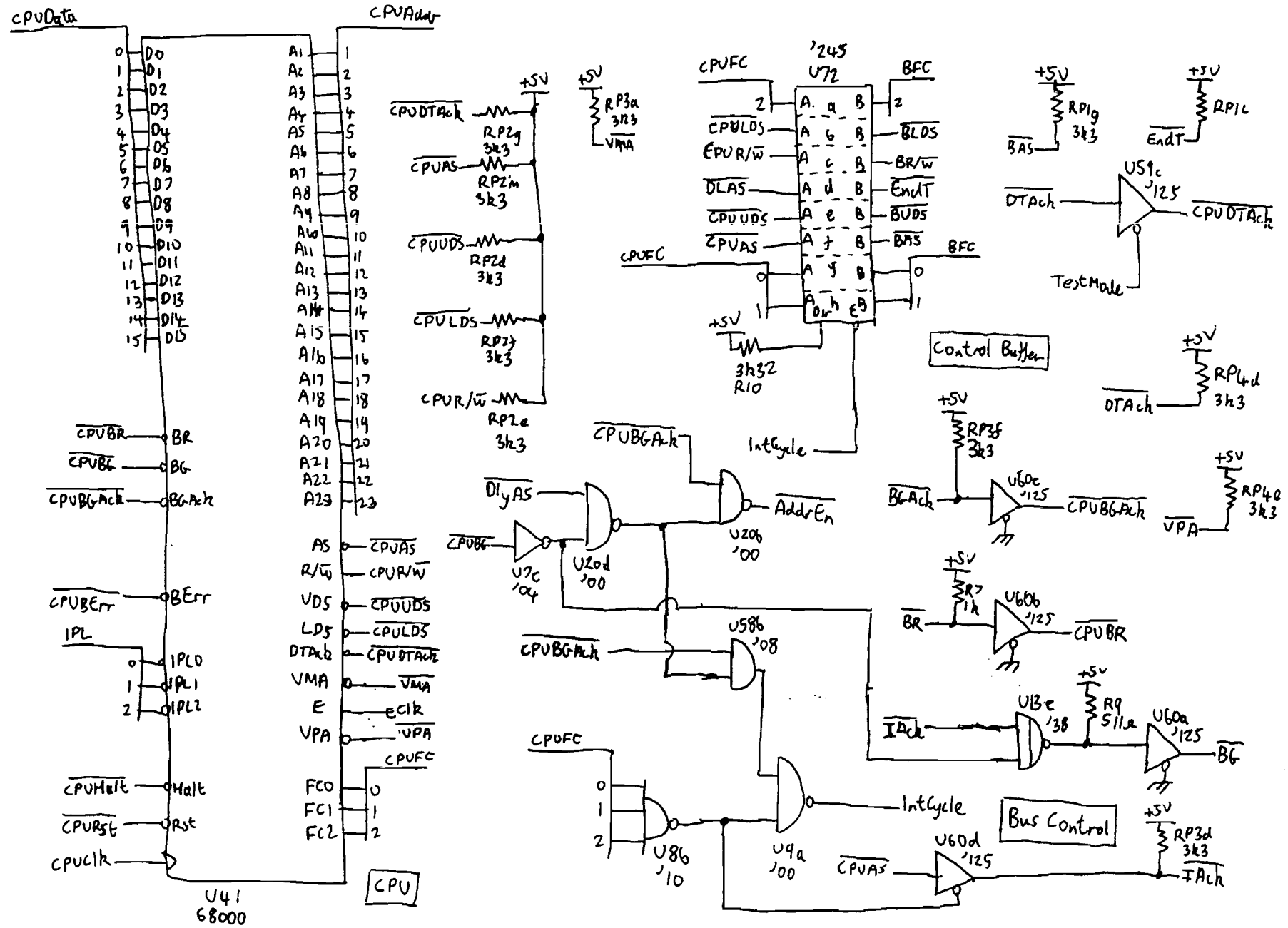

HP9826/ HP9836 CPU PCB Sheet(2) 09826-69515 (Br/Gn)

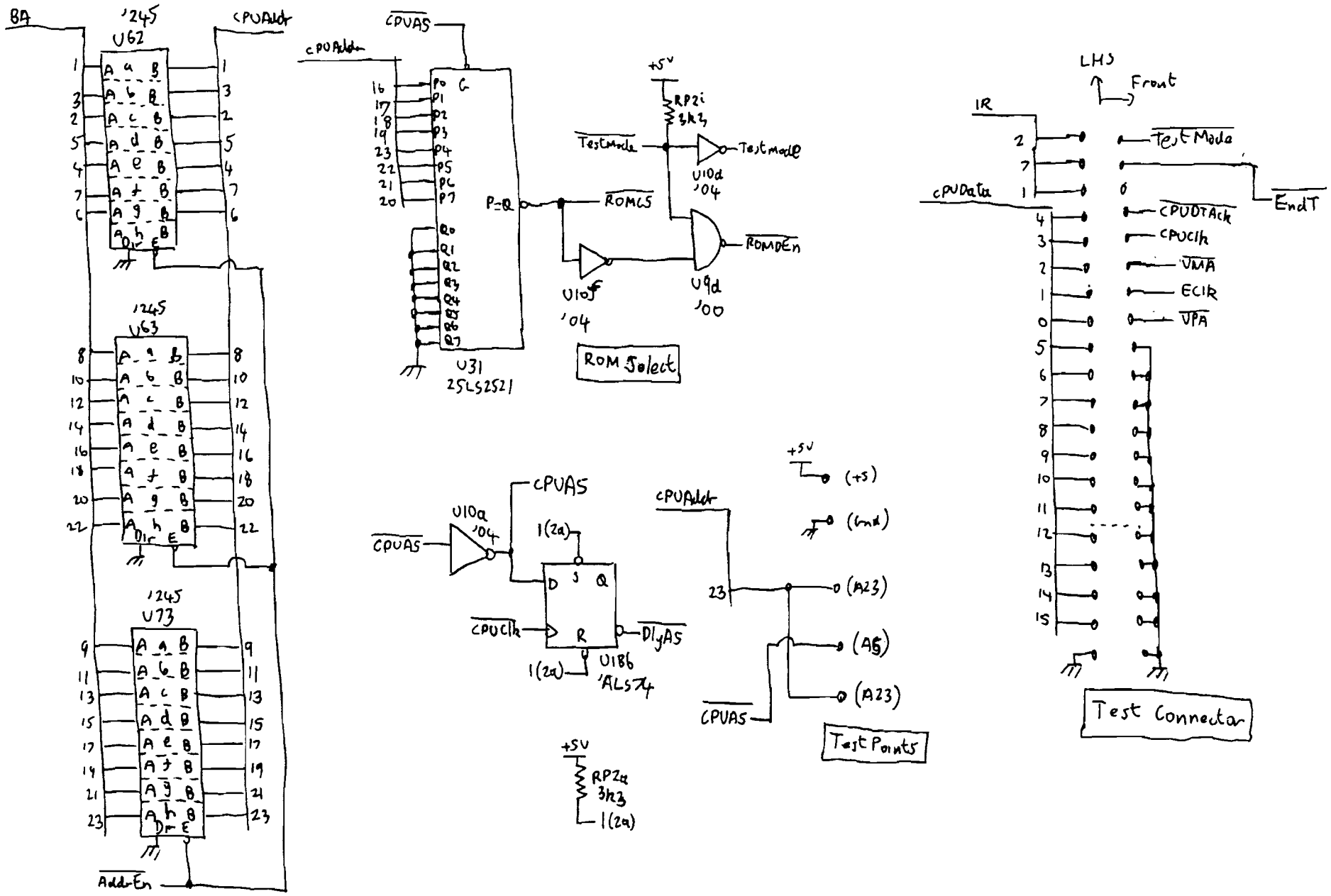

HP9826/HP9836 CPU PCB Sheet 3 09826-64515 (Br/Grn)

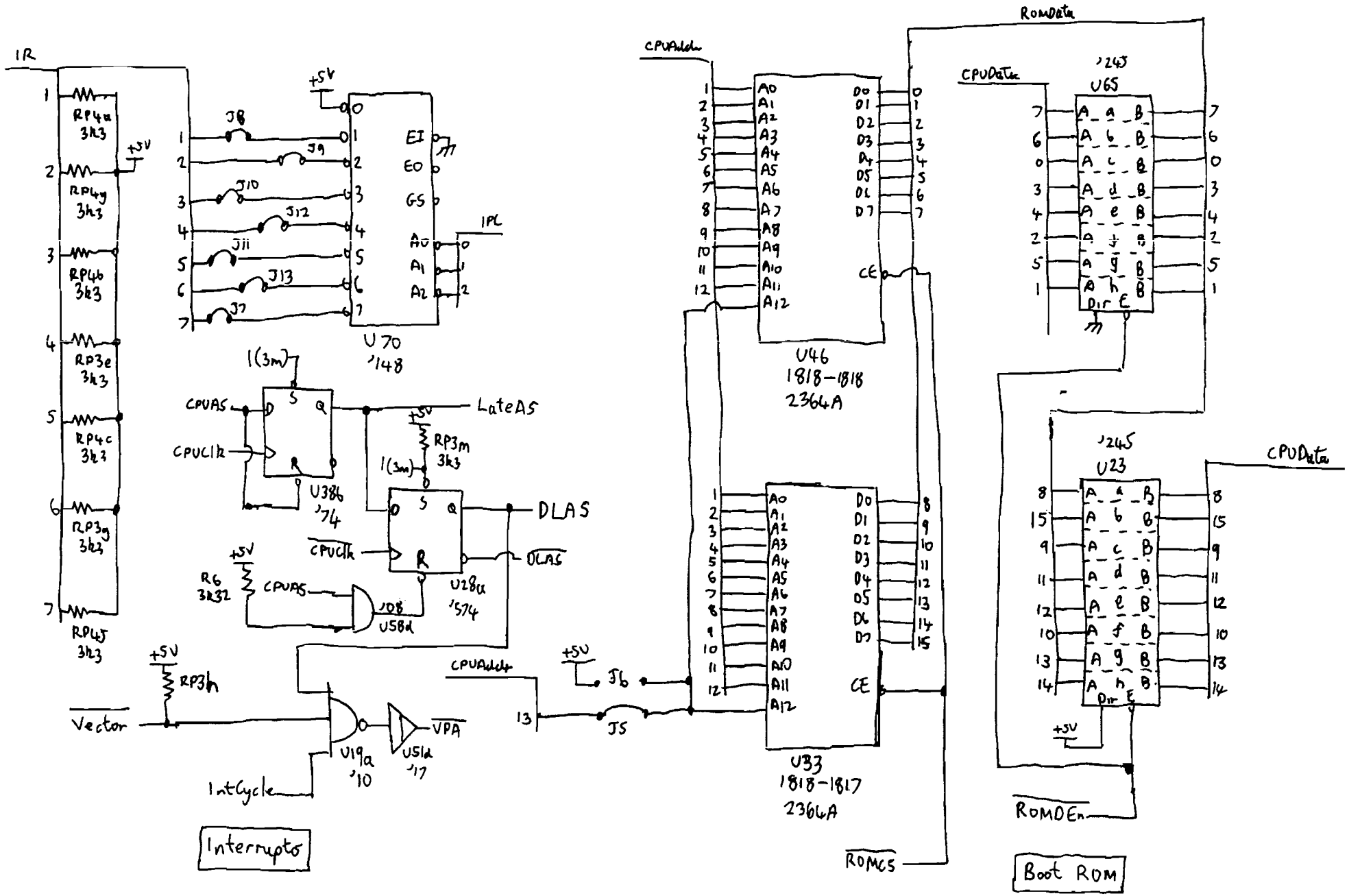

HP9826/HP9836 CPUPCB sheet(4) 09826-69515 (Br/Gn)

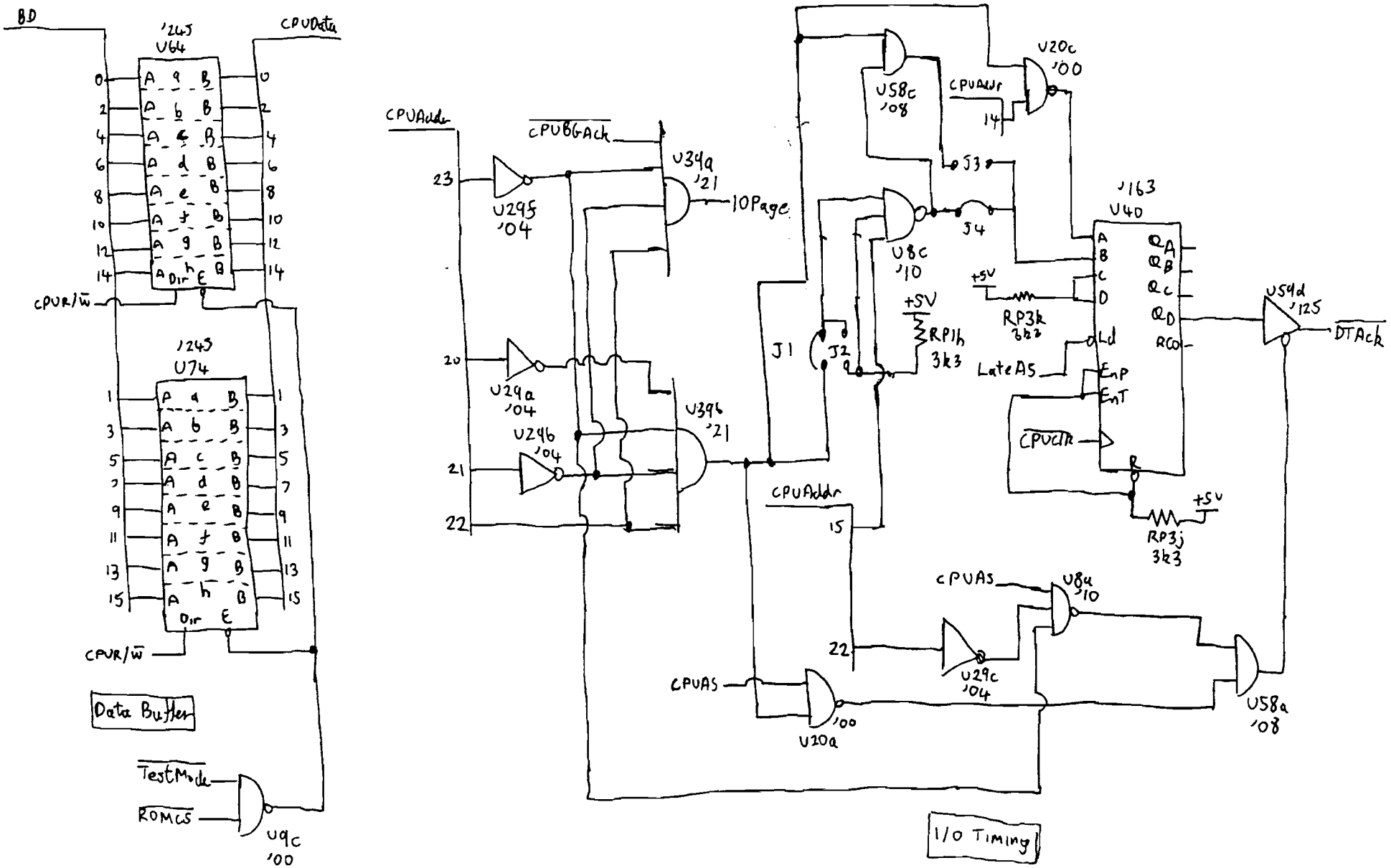

HP9826/HP9836 CPU PCB Sheet 5 09826-69515 (Br/Gn)

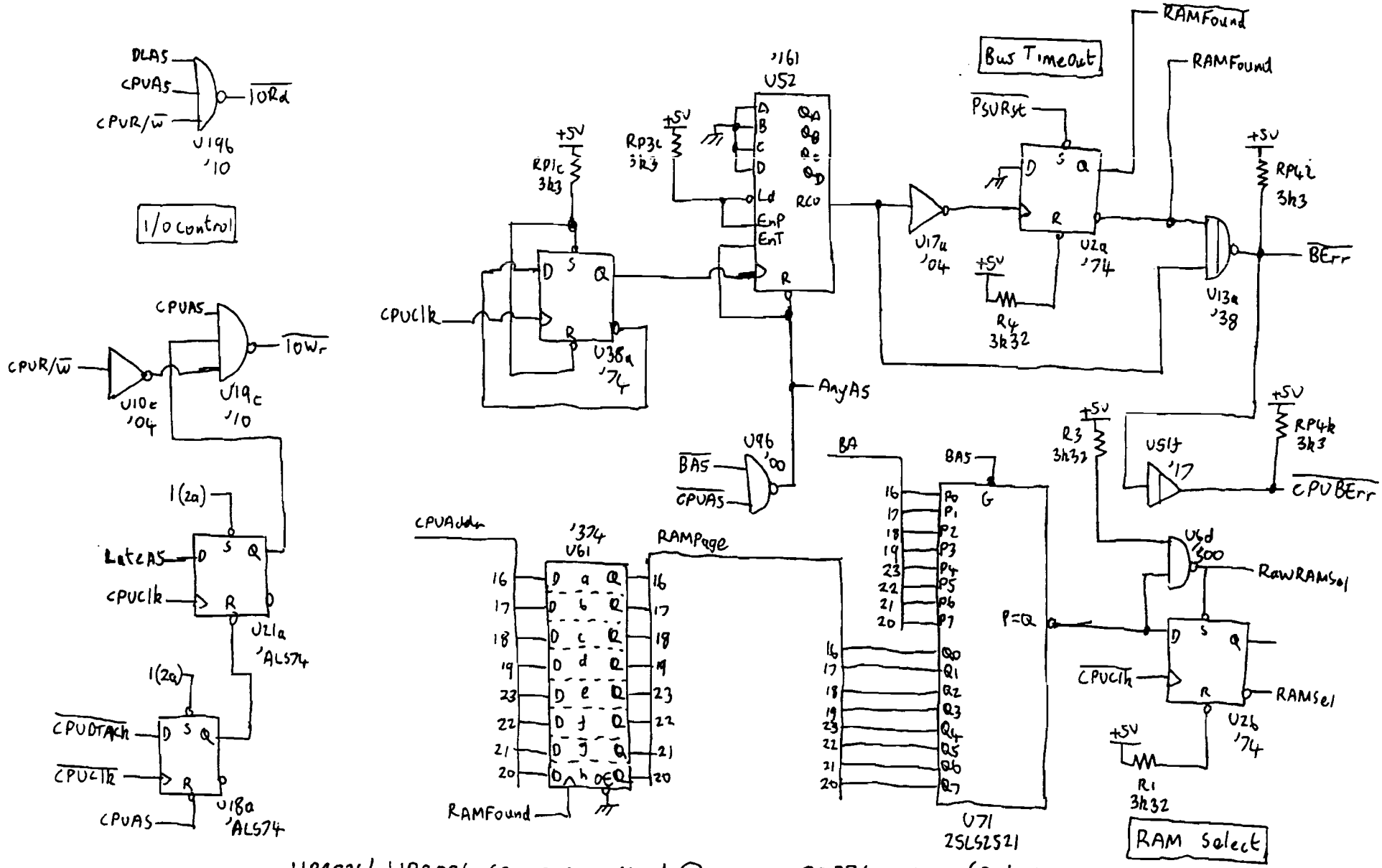

HP9826/ HP9836 CPU PCB Sheet 6 09826-69515 (Br/Gn)

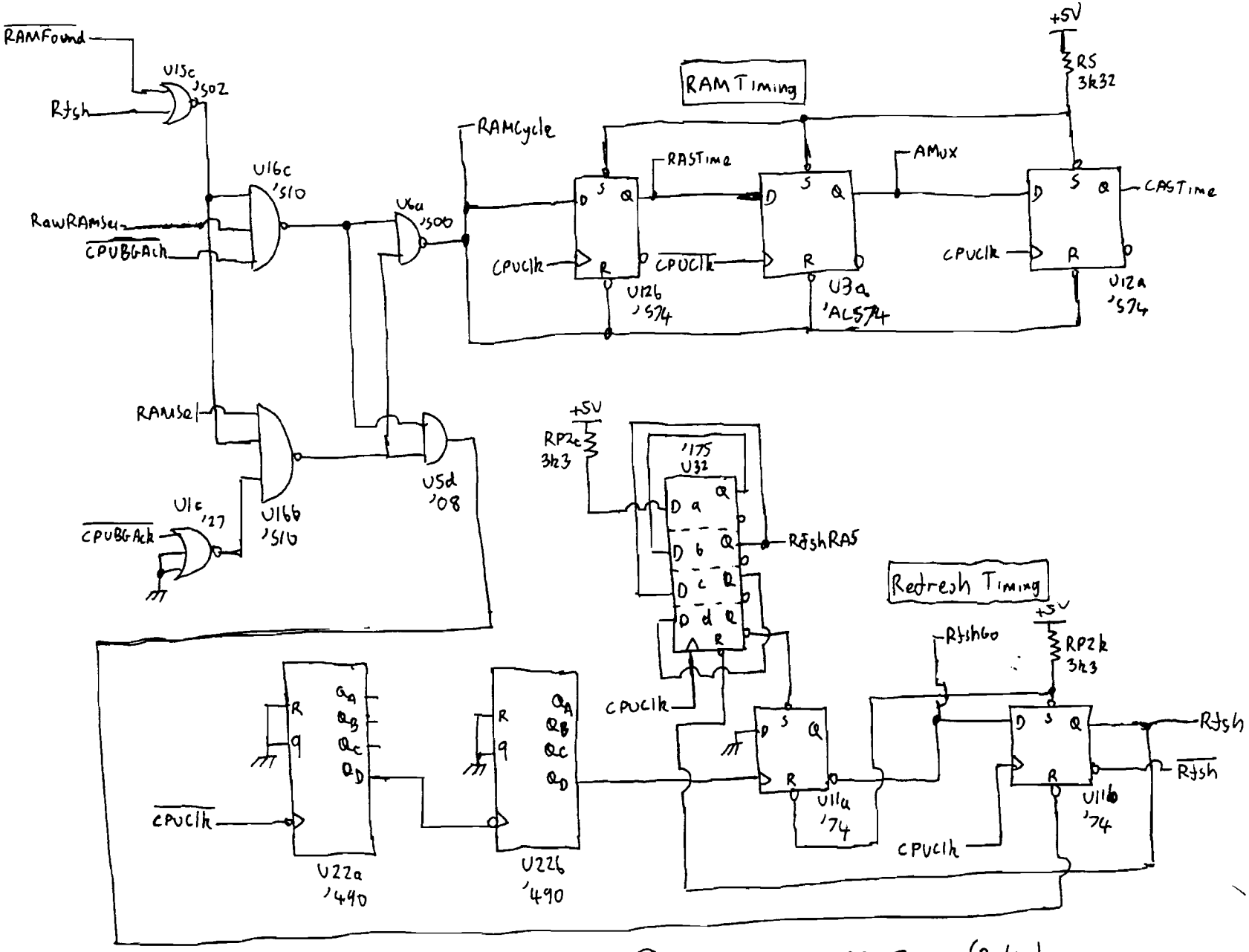

HP9826/HP9836 CPU PCB Sheet (7) 09826-69515 (Br/Gn)

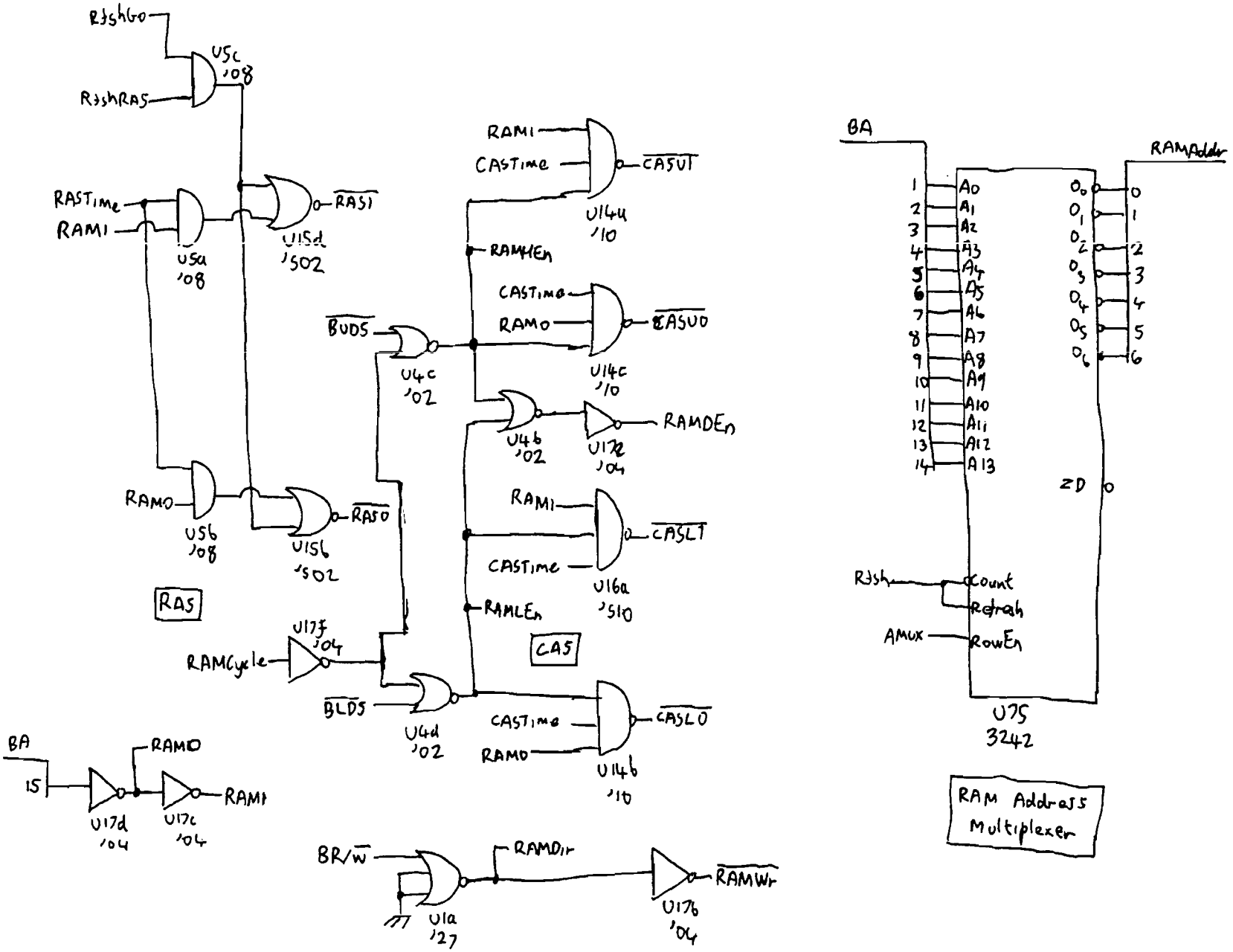

HP9826/ HP9836 CPU PCB Sheet (8) 09826-69515

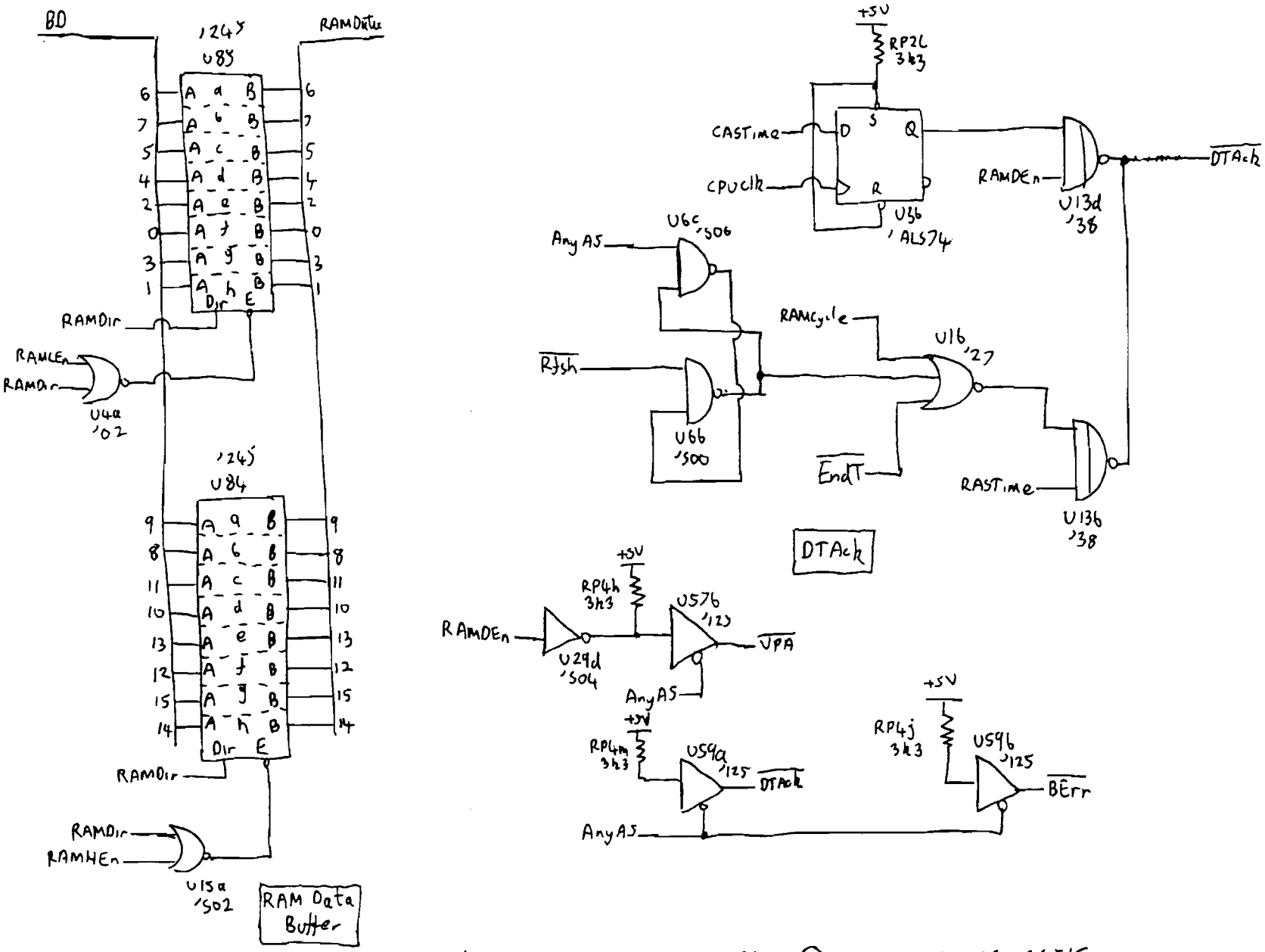

HP9826/HP9836 CPU PCB Sheet 9 09826-69515

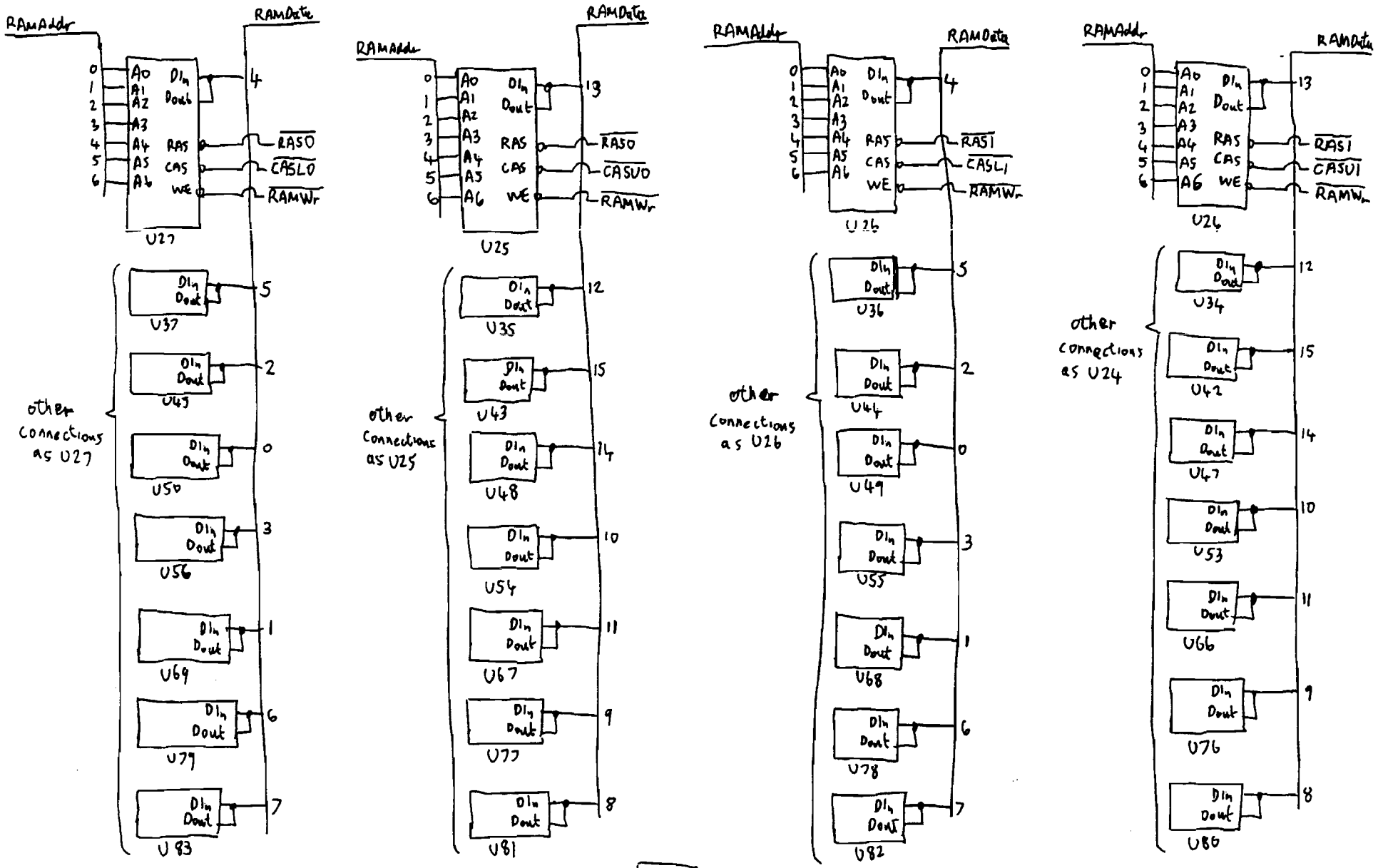

RAM

All RAMs : 4816

HP9826/HP9836 CPU PCB Sheet 10

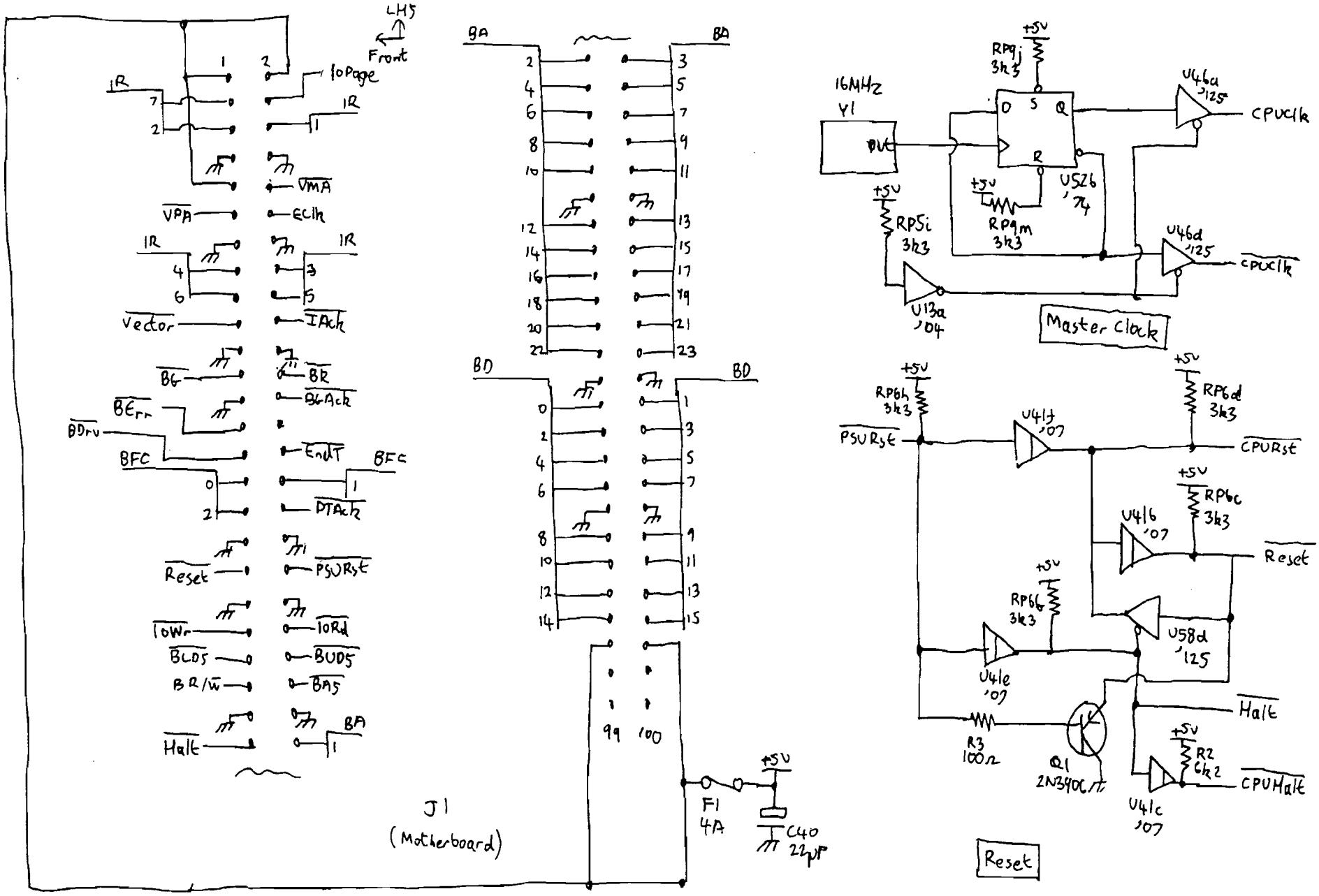

HP9826 / HP9836 CPU PCB Sheet (1) 09826-66516 (Br/Bu)

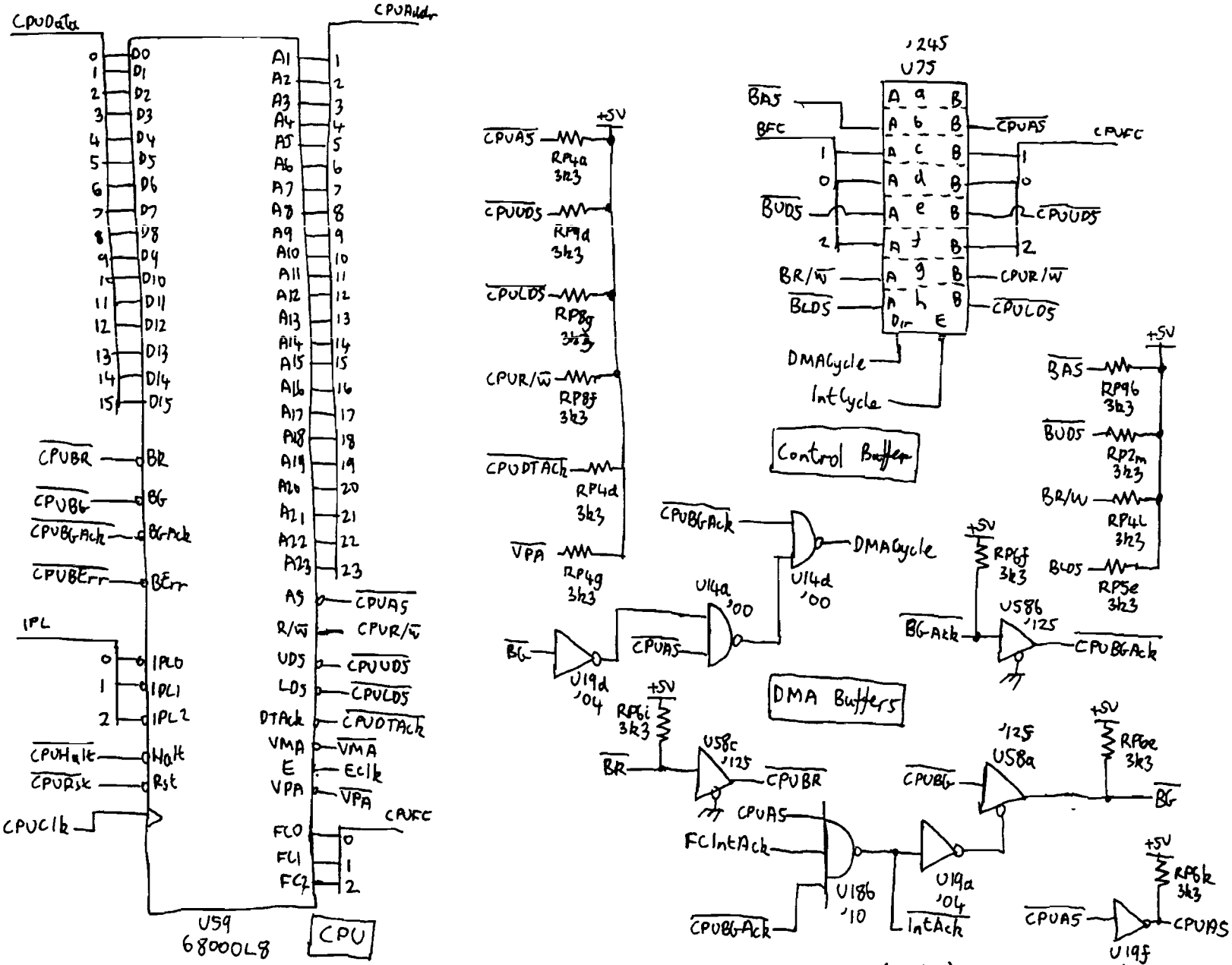

HP9826 / HP9836 CPU PCB sheet (2) 09826-66516 (B/Bu)

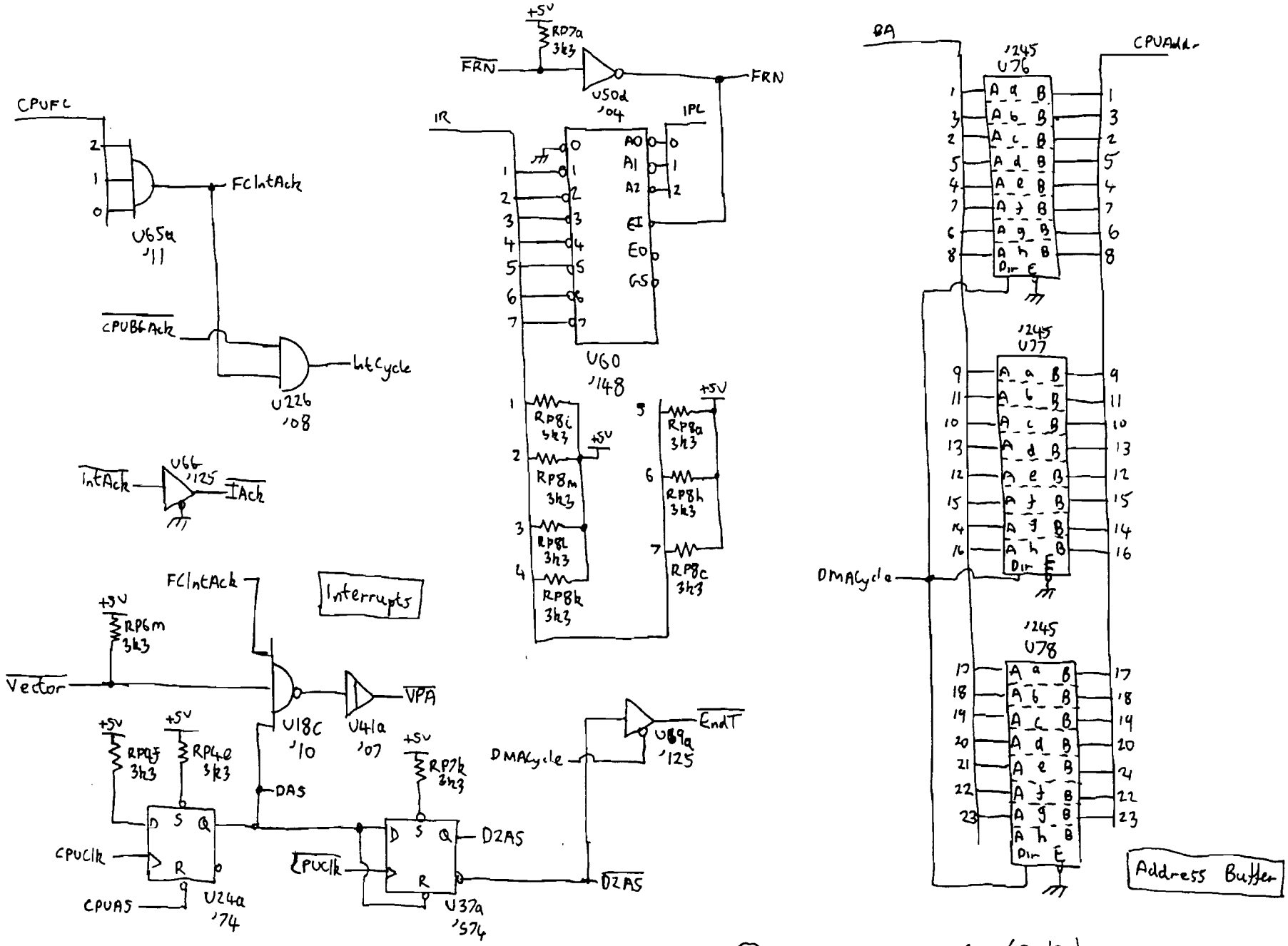

HP9826/HP9836 CPU PCB Sheet 3 09826-66516 (Br/Bu)

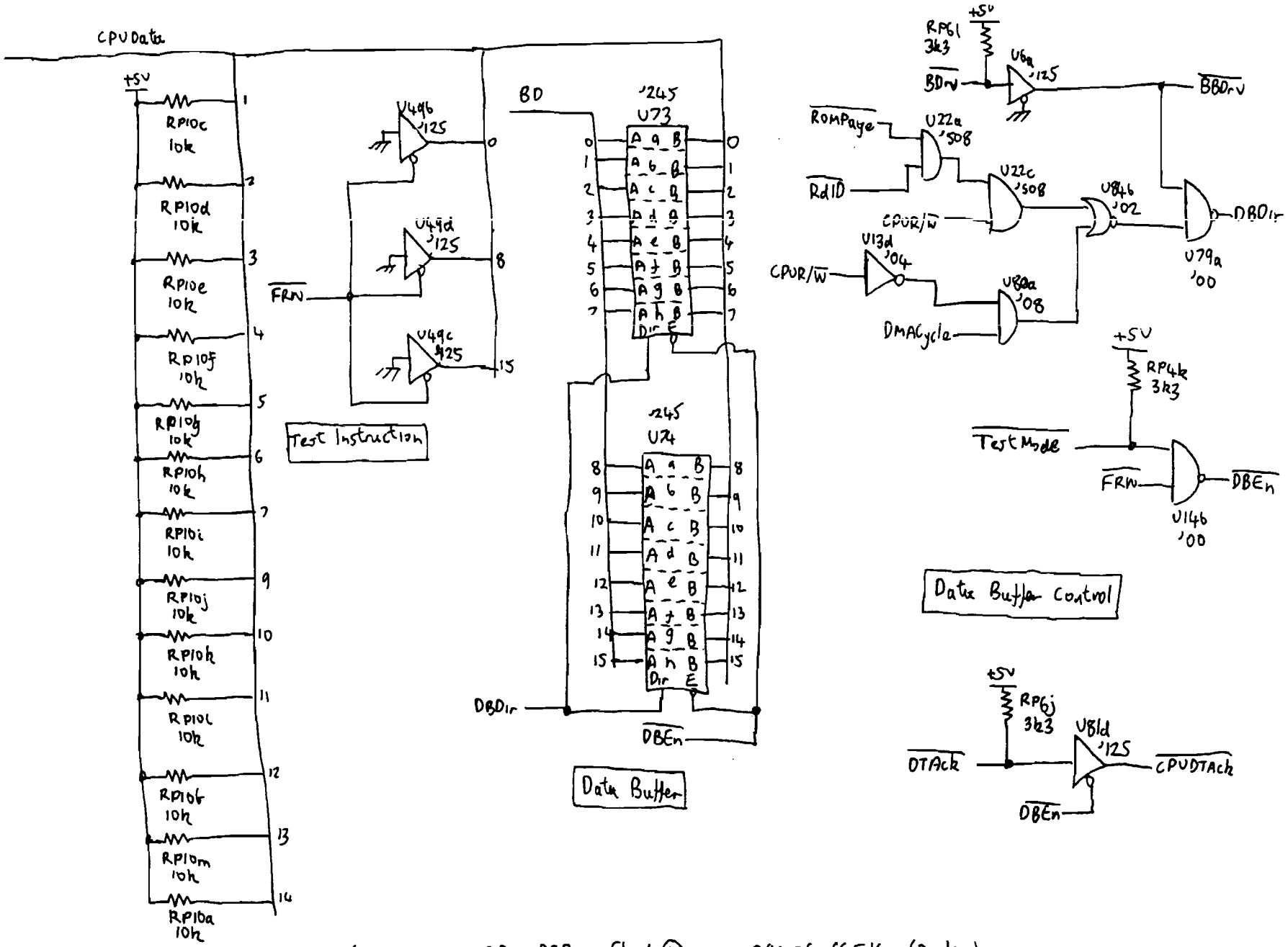

HP 9826 /HP9836 CPU PCB Sheet (4) 09826-66516 (Br/Bu)

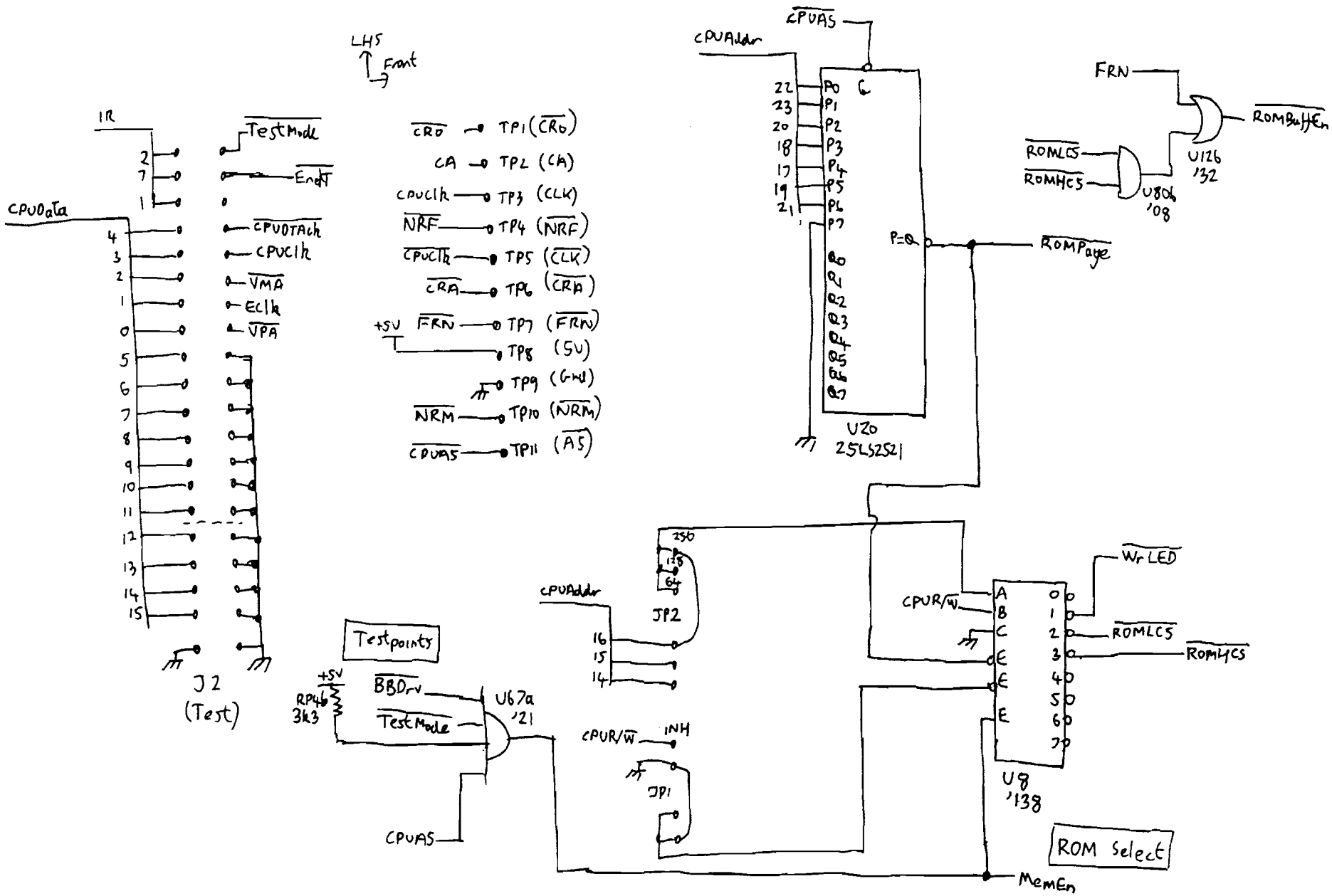

HP9826/HP9836 CPU PCB Sheet 5 09826-66516 (B-/Bu)

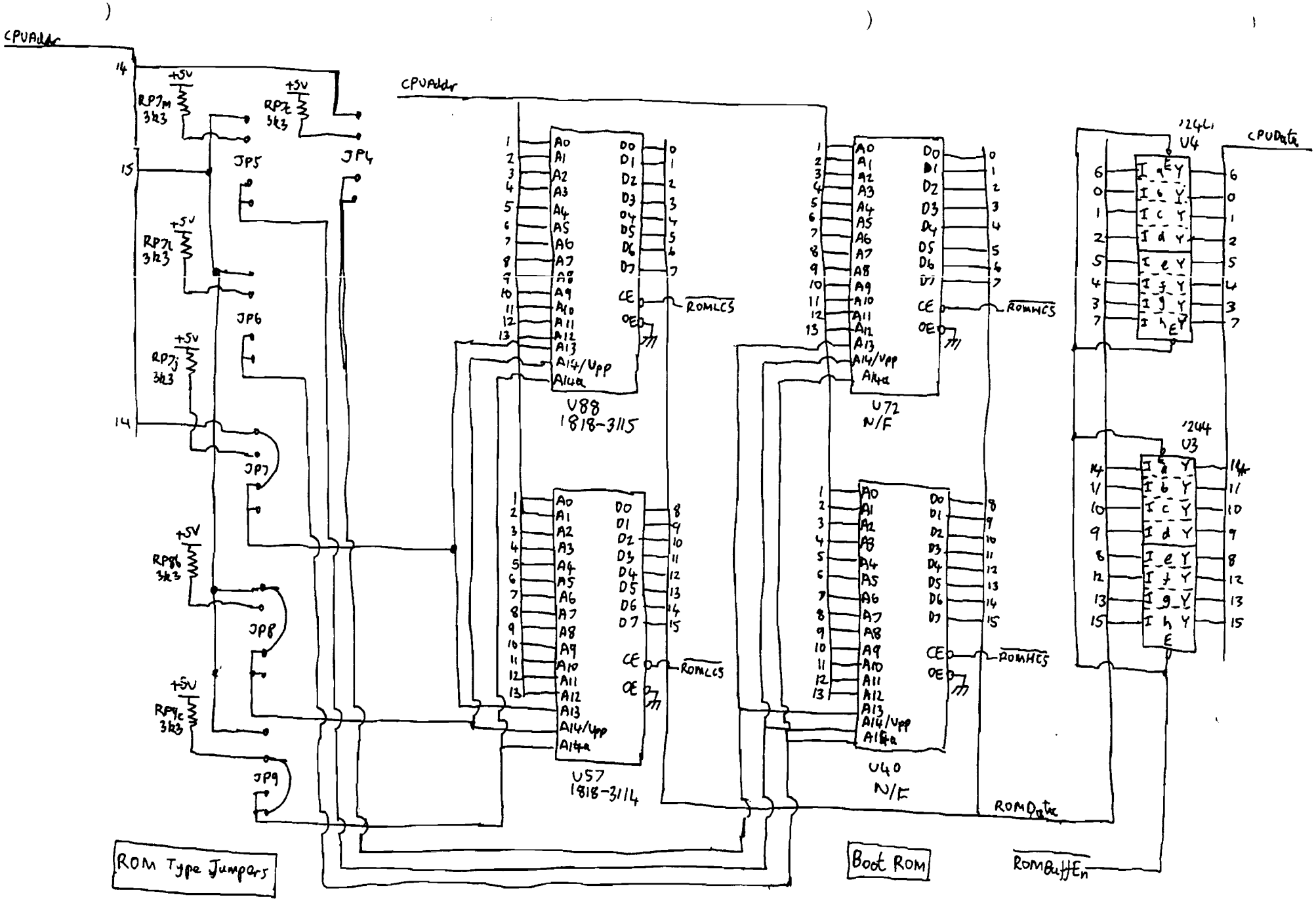

HP9826/HP9836 CPU PCB Sheet 6 09826-66516 (Br/Bu)

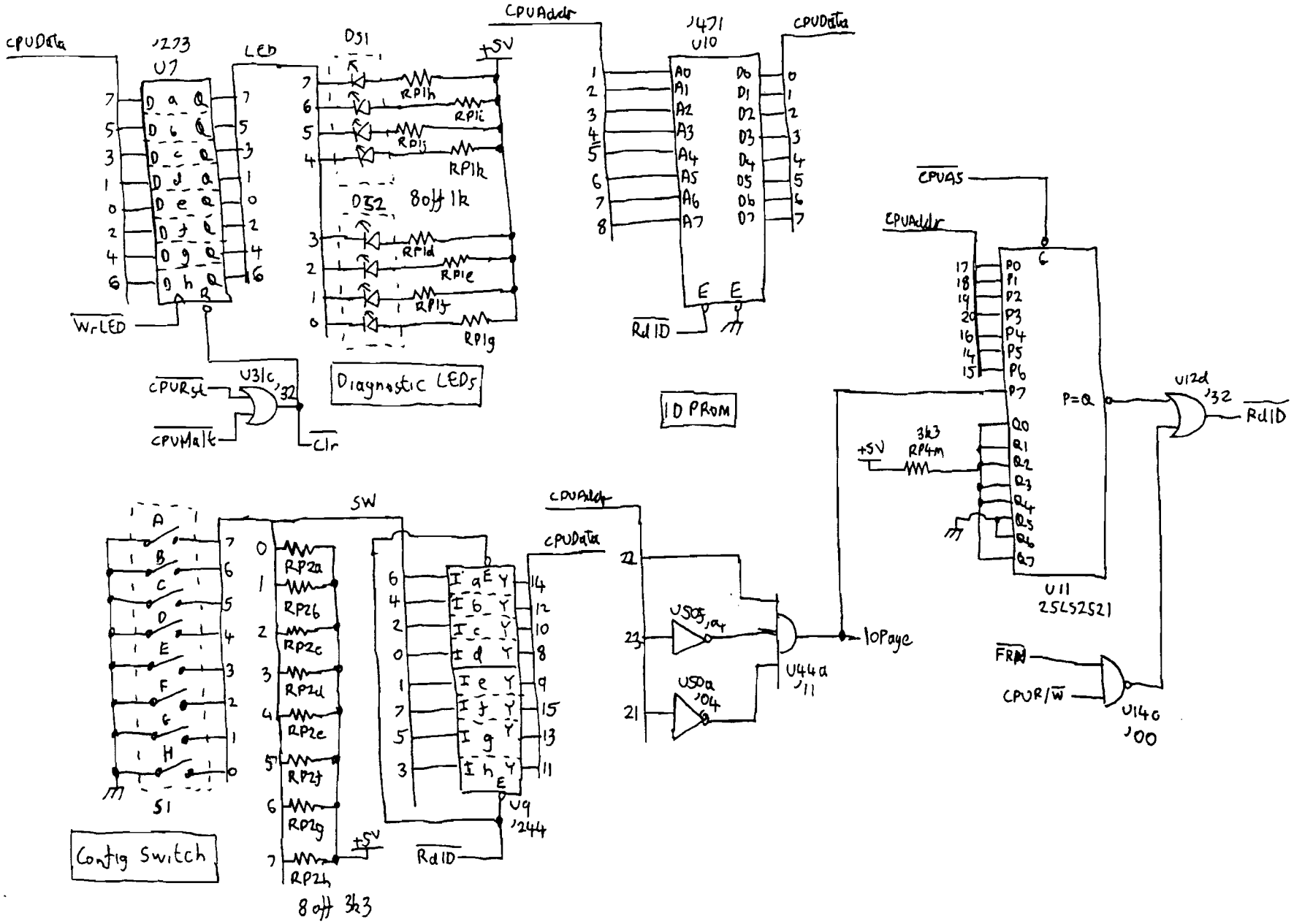

HP9826/HP9836 CPU PCB Sheet(7) 09826-66516 (Br/Bu)

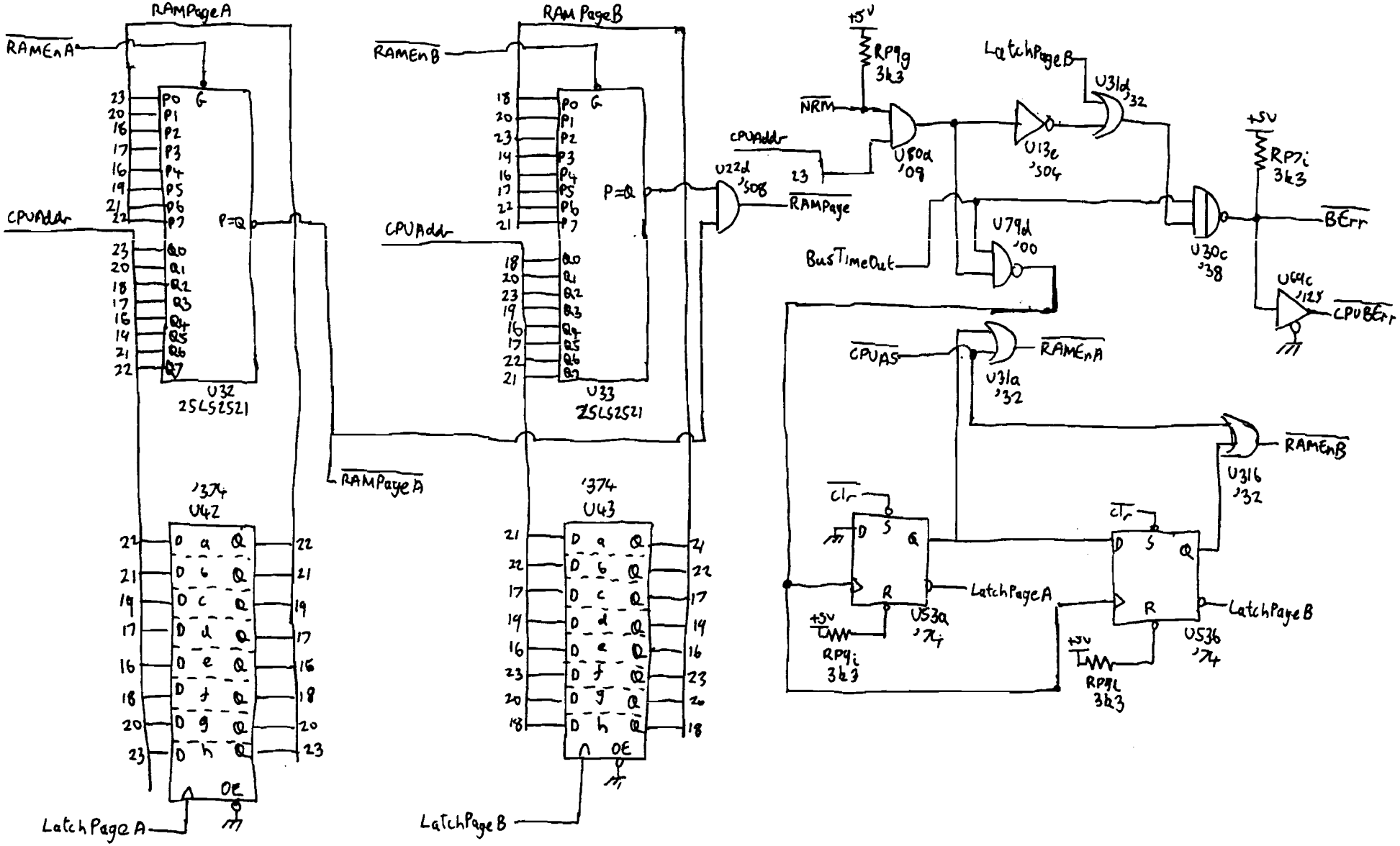

RAM Page Address

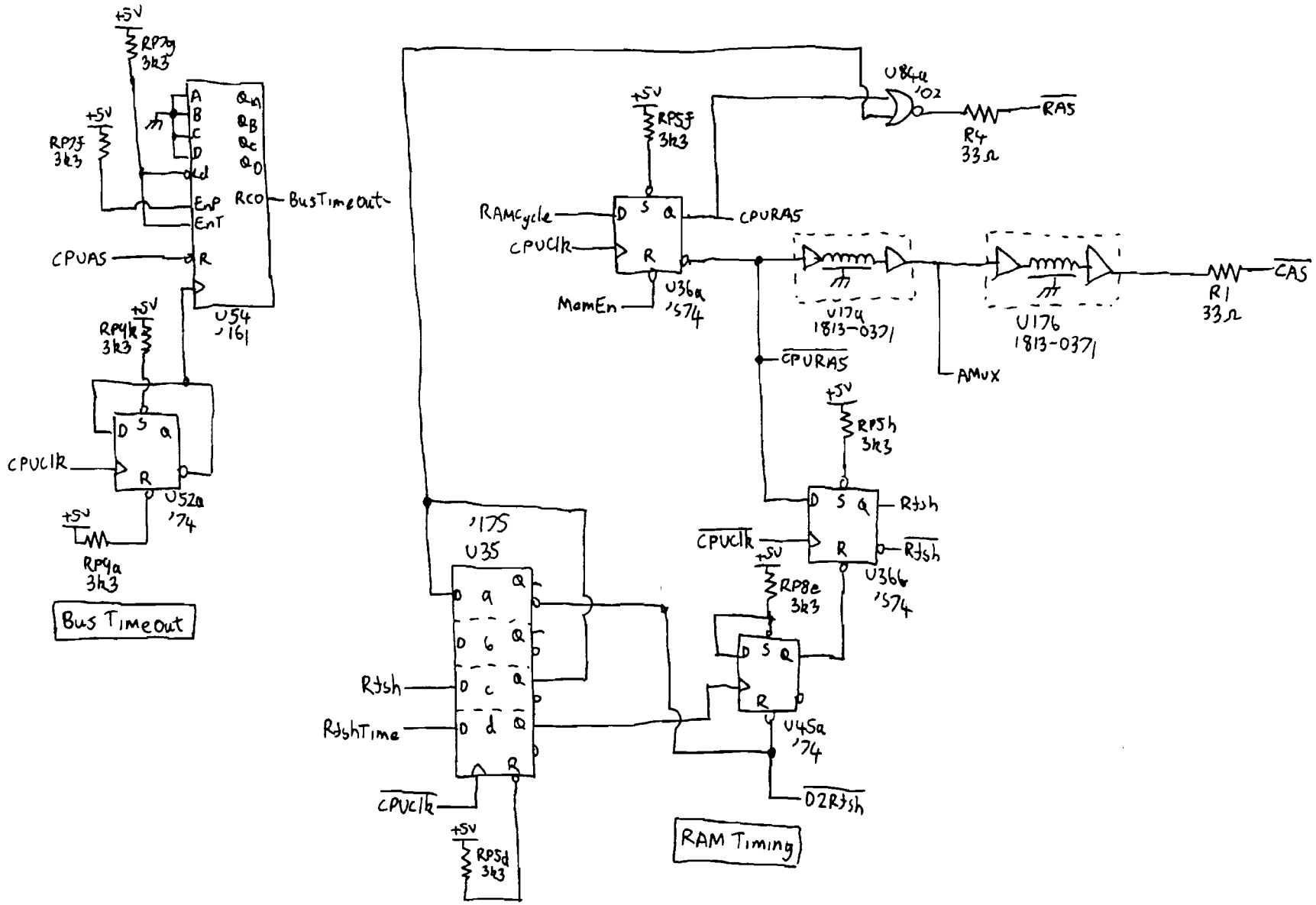

HP9826/HP9836 CPU PCB Sheet (9) 09826-66516 (Br/Bu)

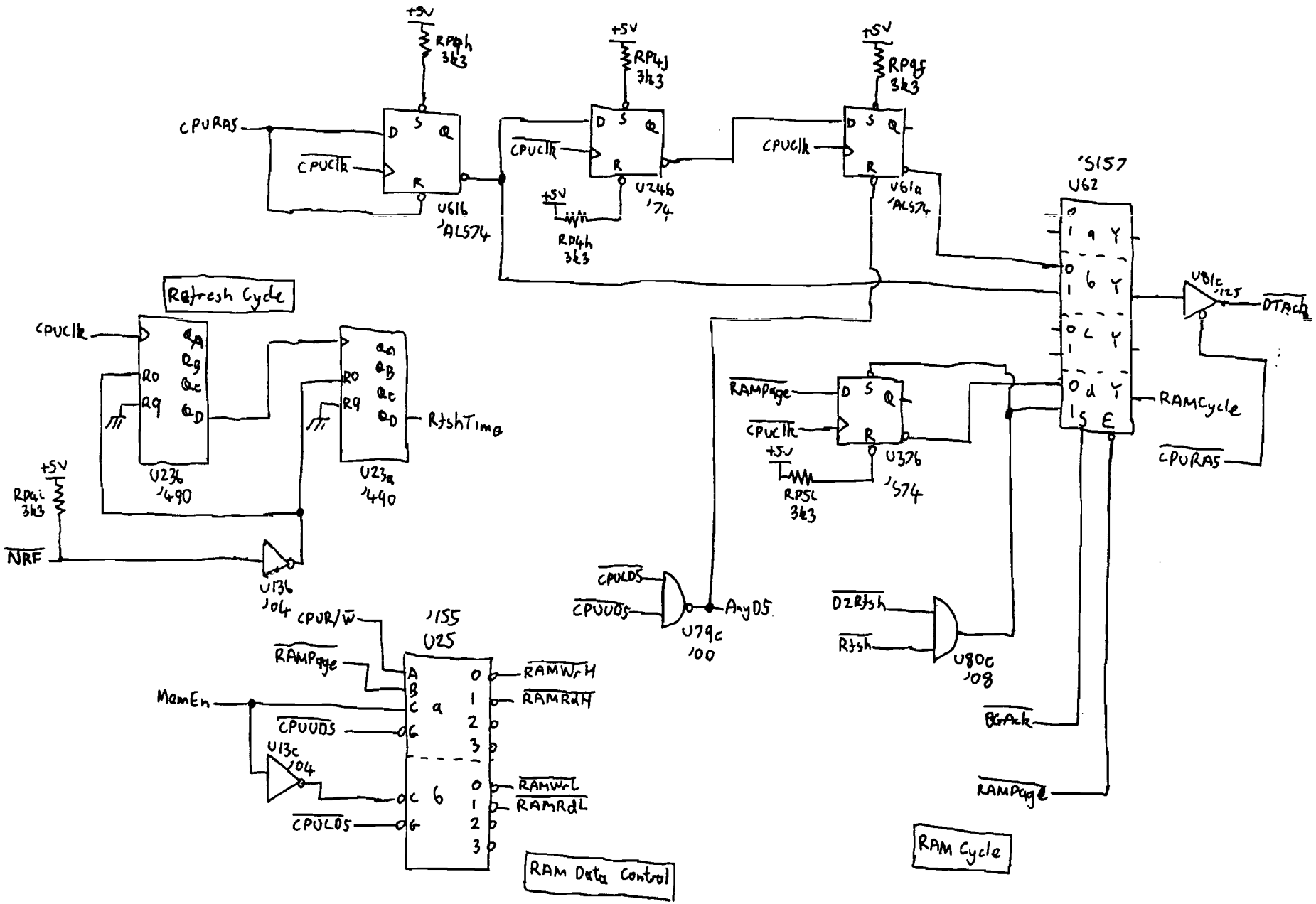

HP9826/HP9836 CPU PCB Sheet (10) 09826-66516 (Br/Bu)

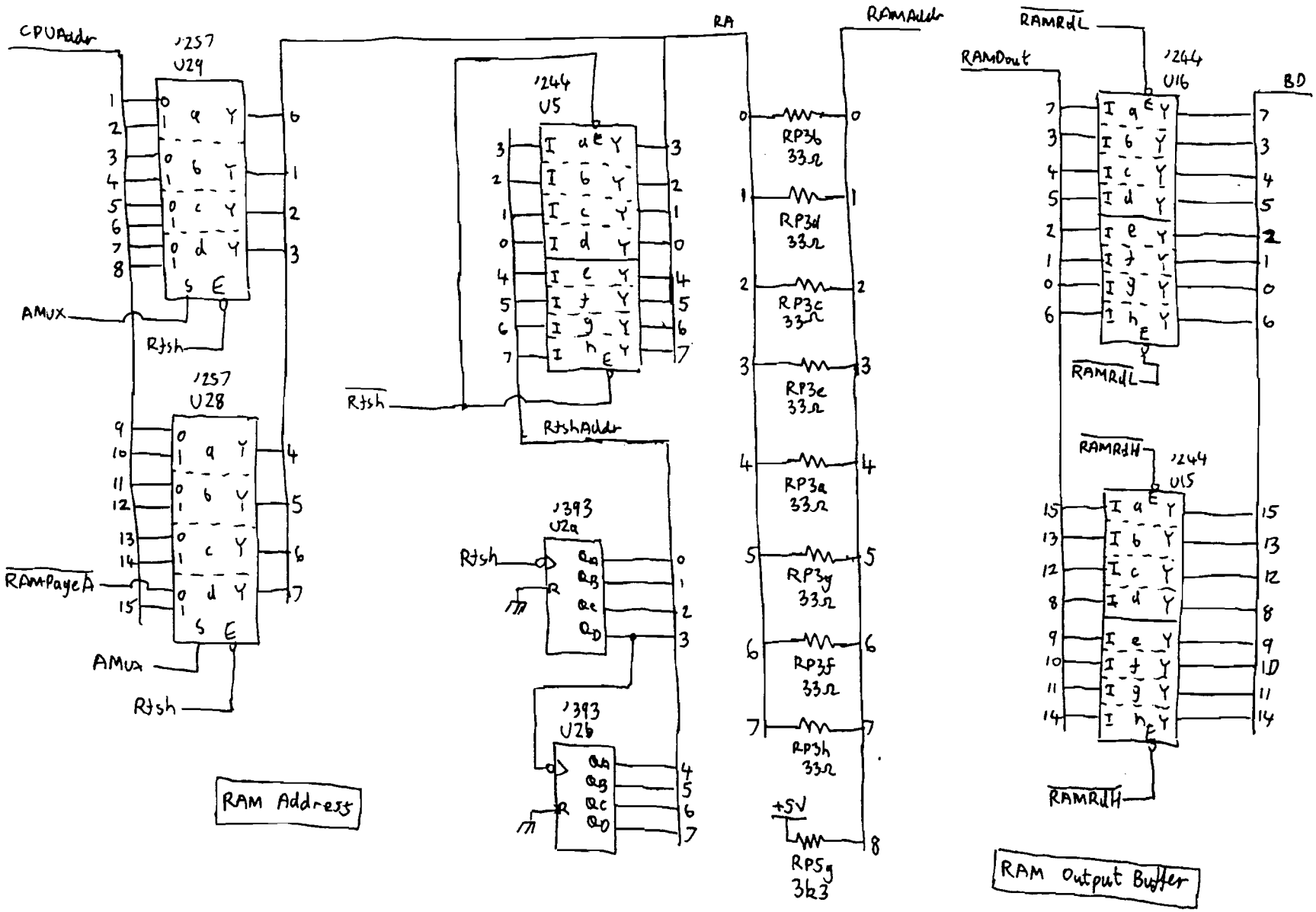

HP9826 / HP9836 CPU PCB Sheet (11) 09826-66516 (Br/Bu)

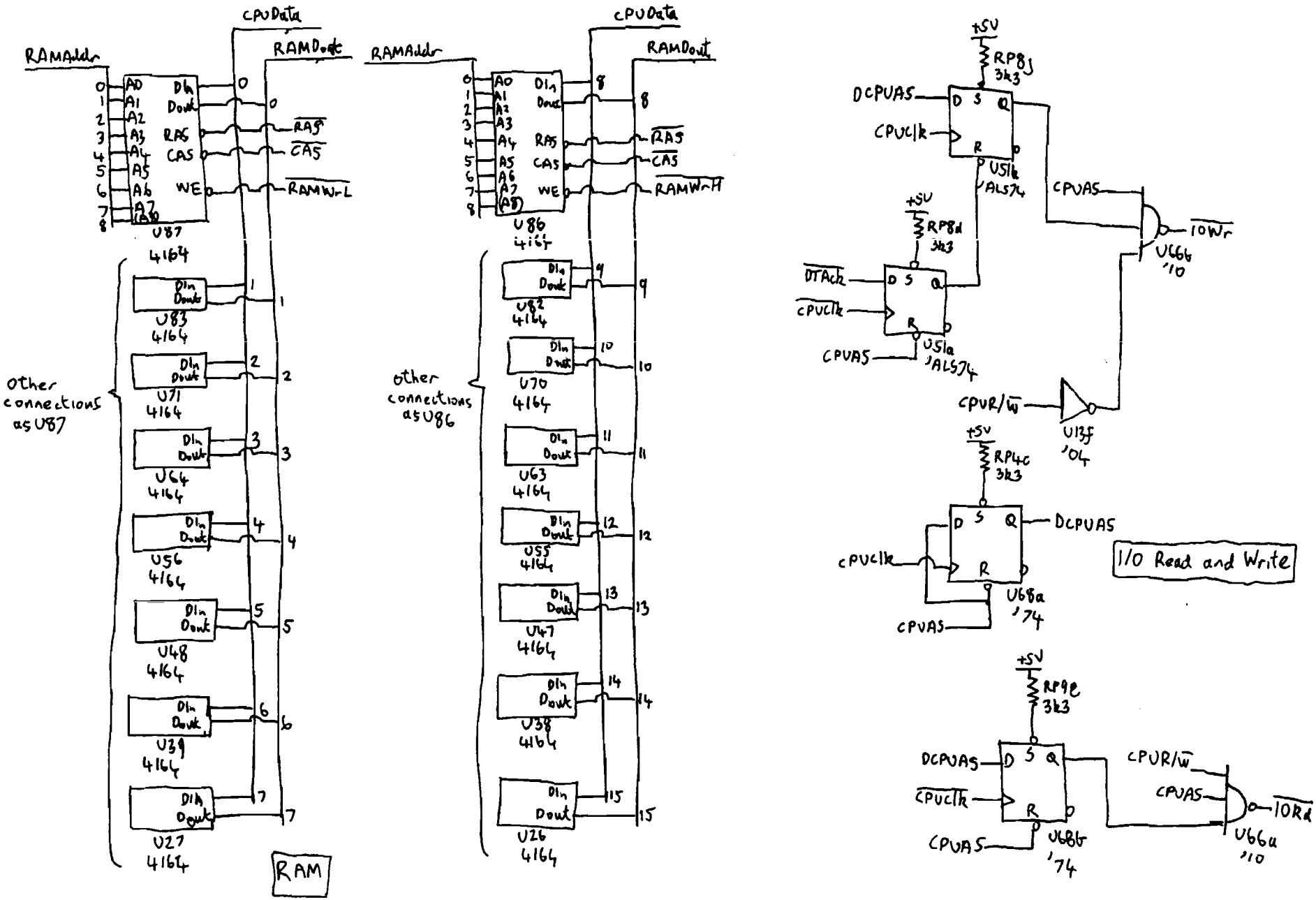

HP9826/HP9836 CPU PCB Sheet 12 09826-66516 (Br/Bu)

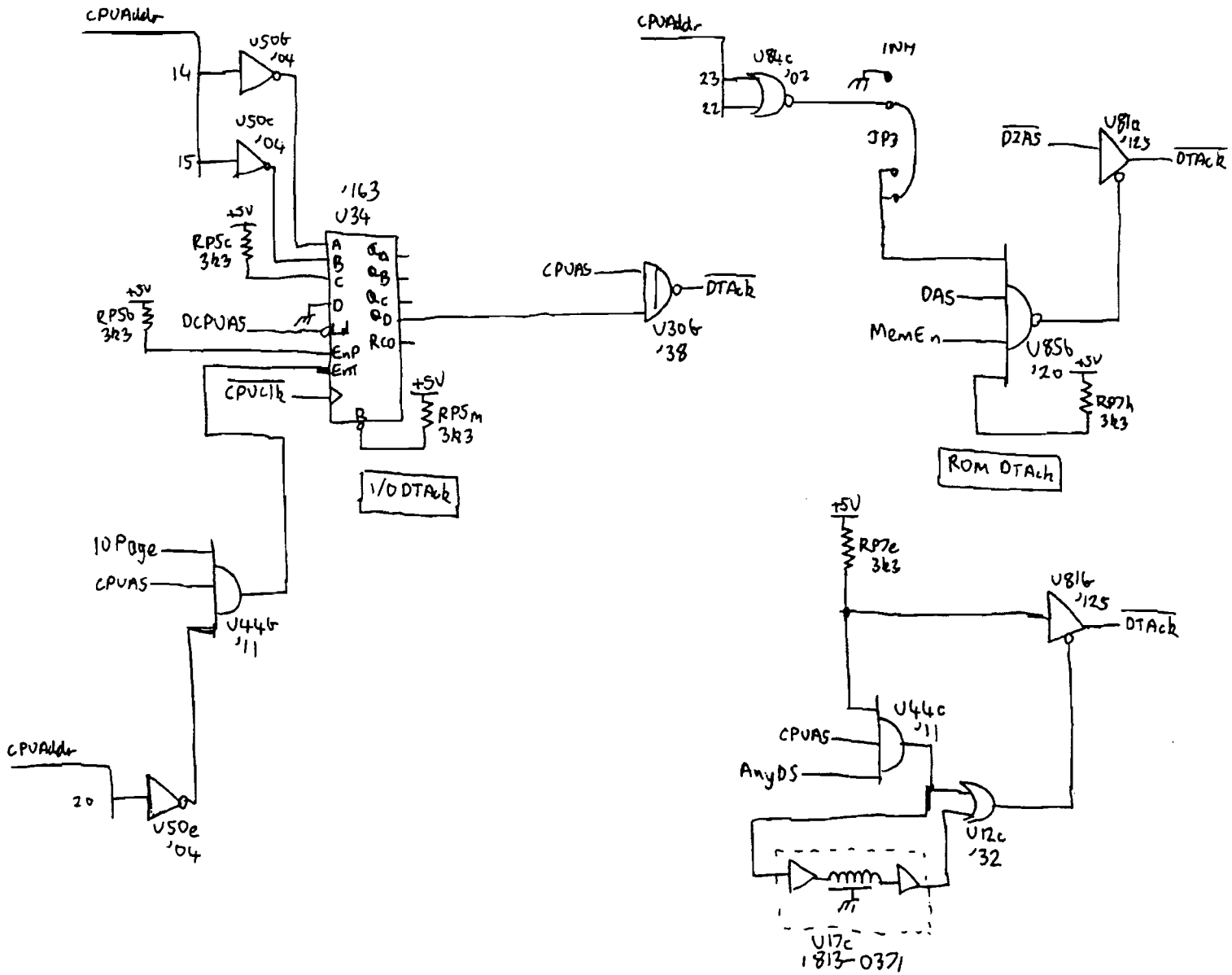

HP9826/HP9836 CPU PCB Sheet (13) 09826-66516 (Br/Bu)

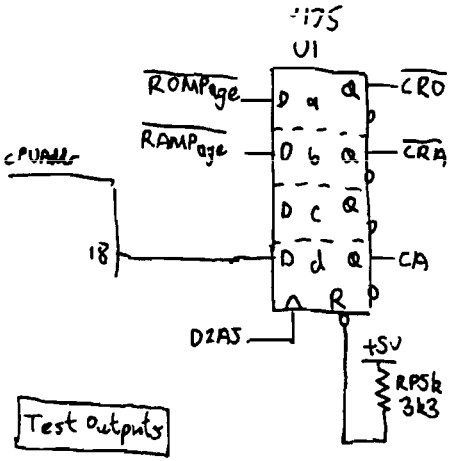

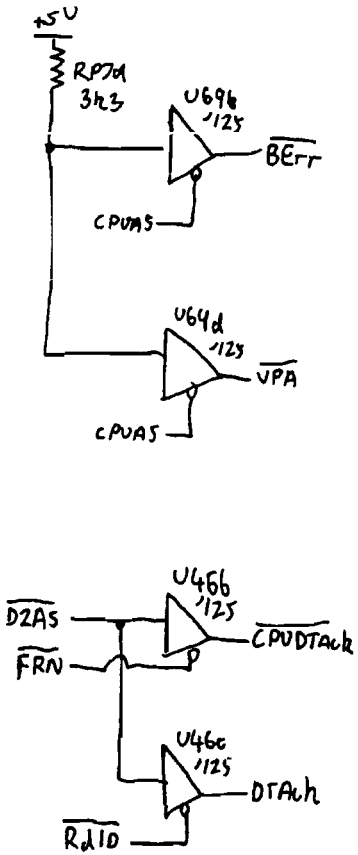

HP9826/HP9836 CPU PCB Sheet (14) 09826-66516 (Br/Bu)

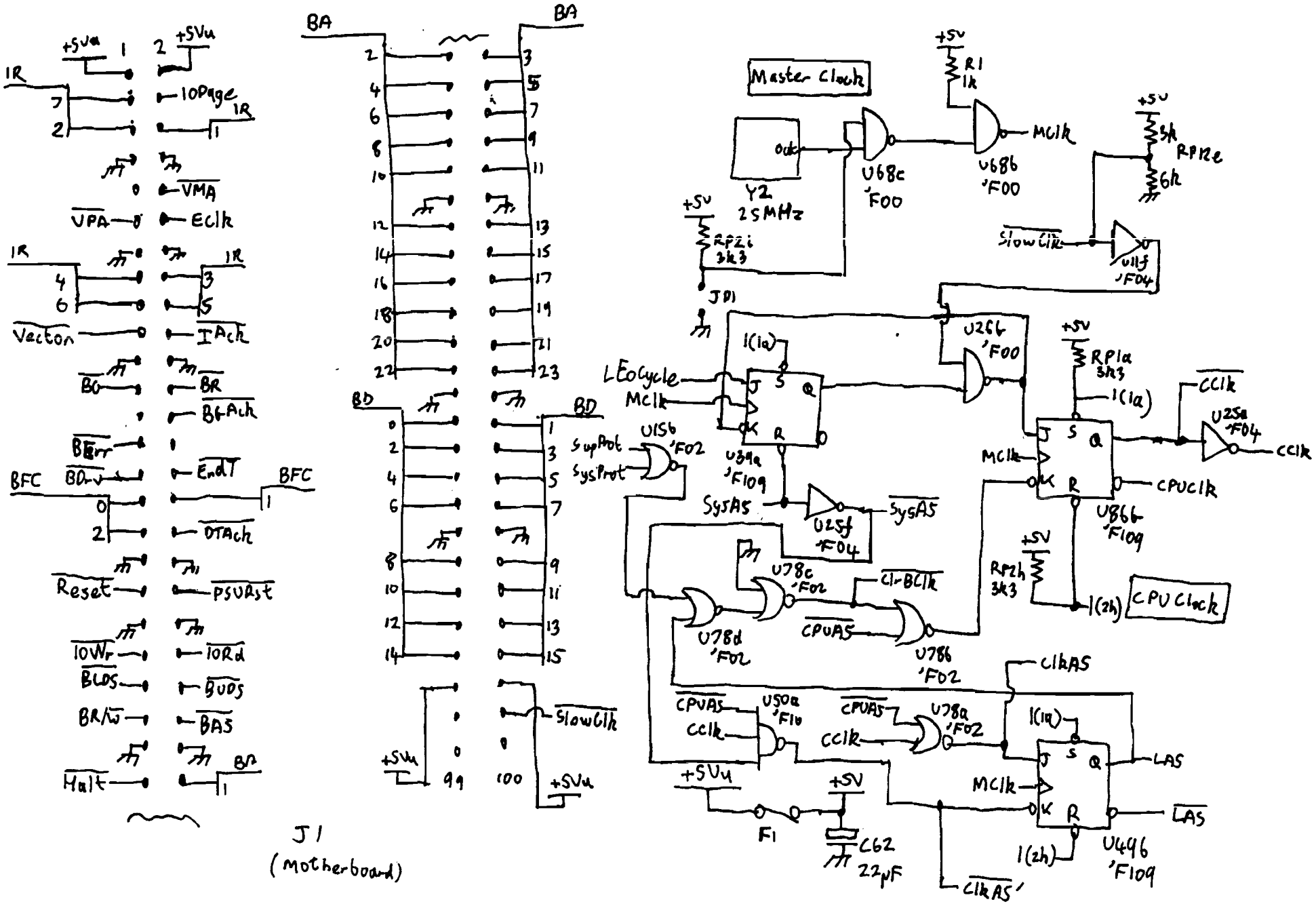

HP9826/HP9836 CPU/MMU PCB Sheet (1) 09836-69513 (B-b)

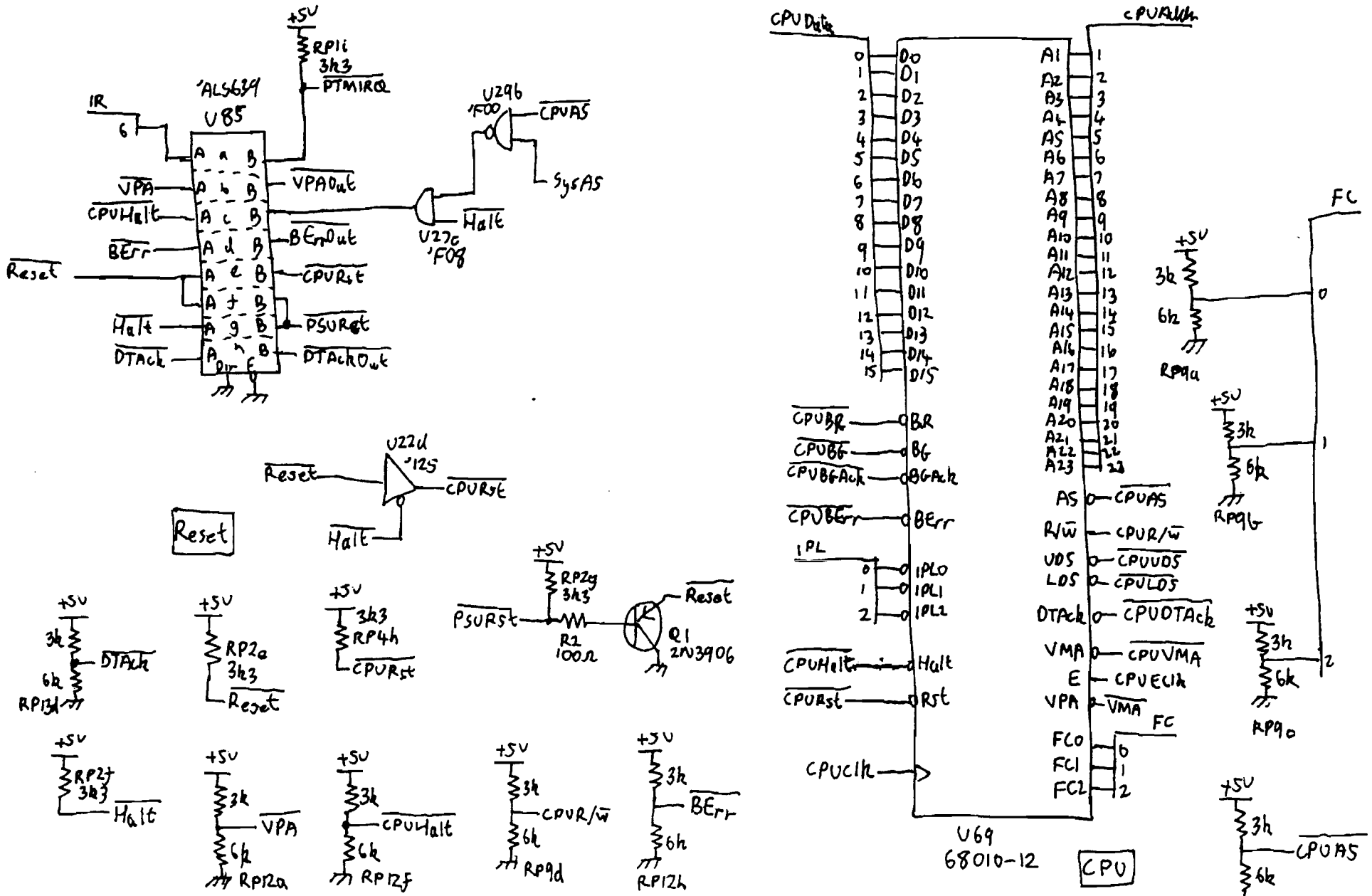

HP9826/HP9836 CPU/MMU PCB Sheet (2) 09836-69513 (Br/0)

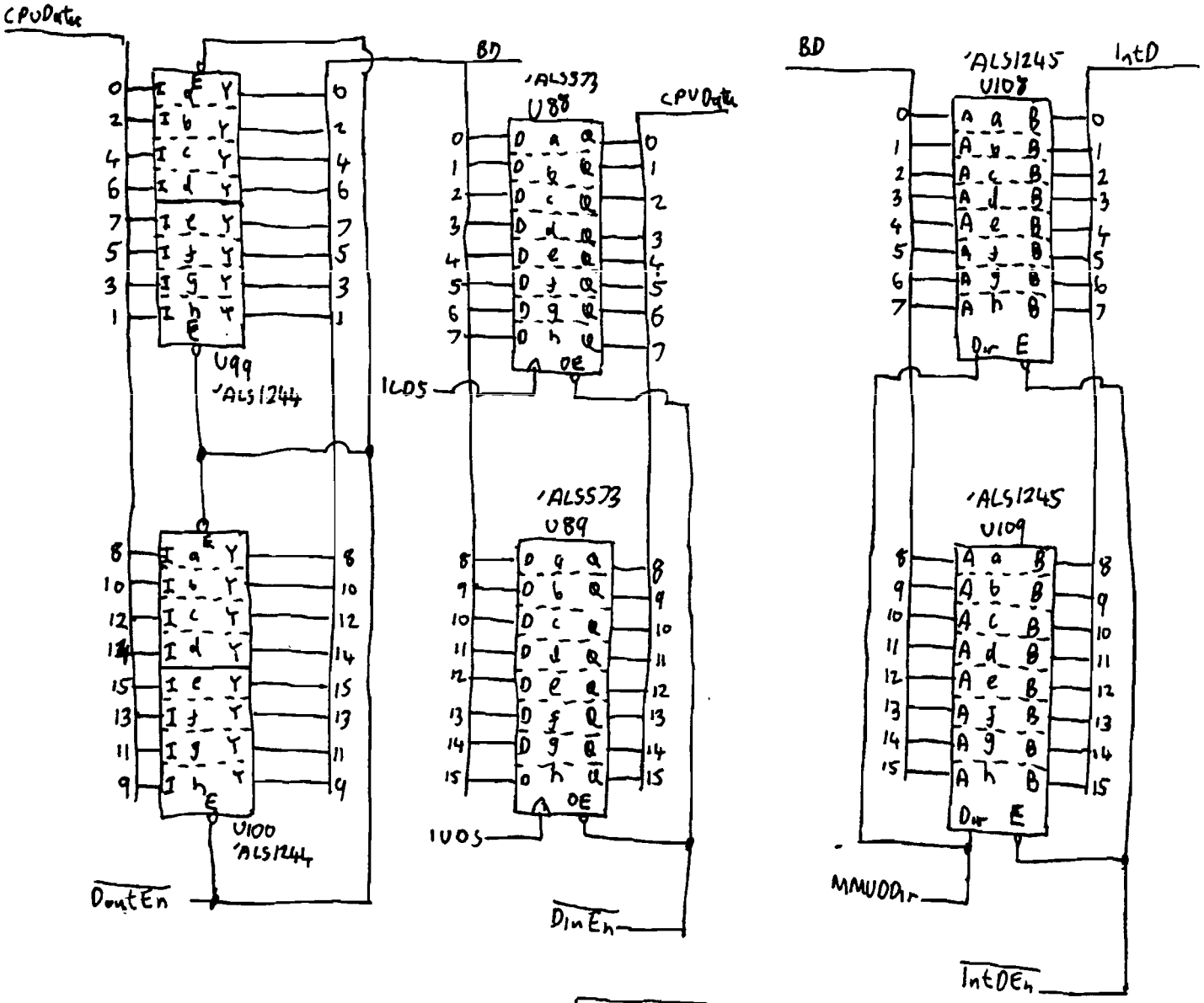

Data Buffers

)

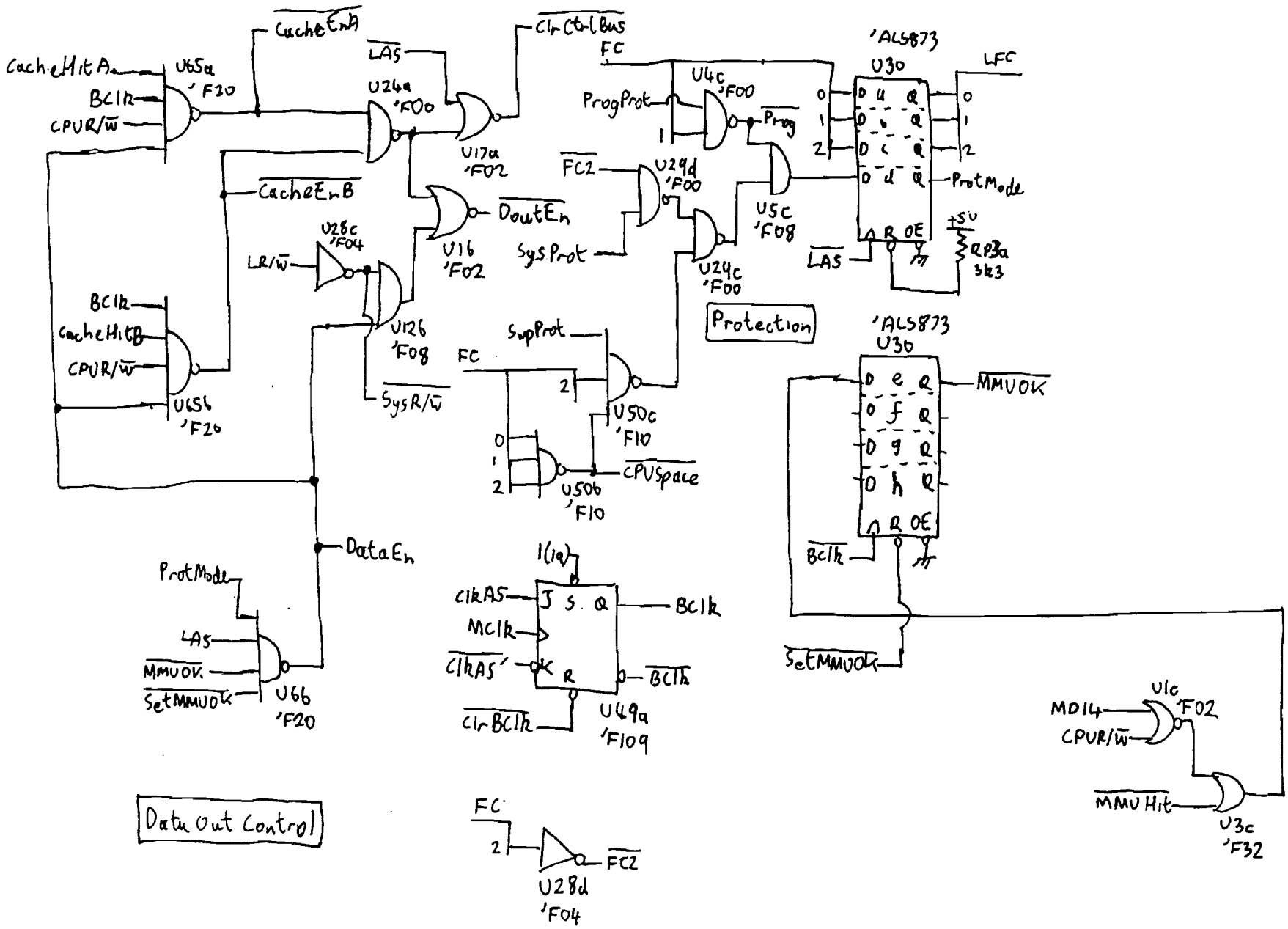

HP9826/HP9836 CPU/MMU PCB Sheet (4) 09836-69513 (Br/o)

)

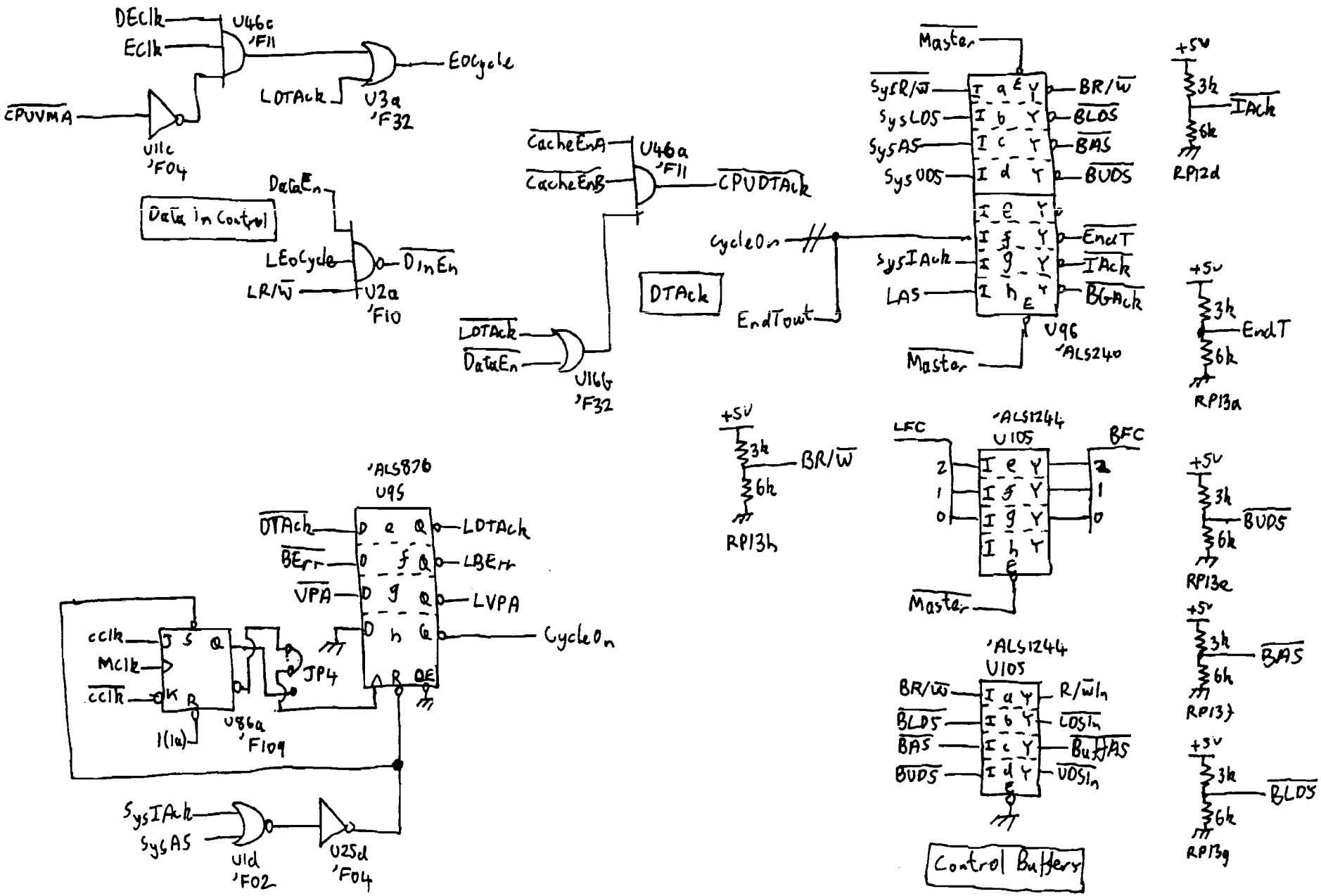

HP9826/HP9826L CPU/MMU PCB Sheet 5 09836-69513 (B-/0)

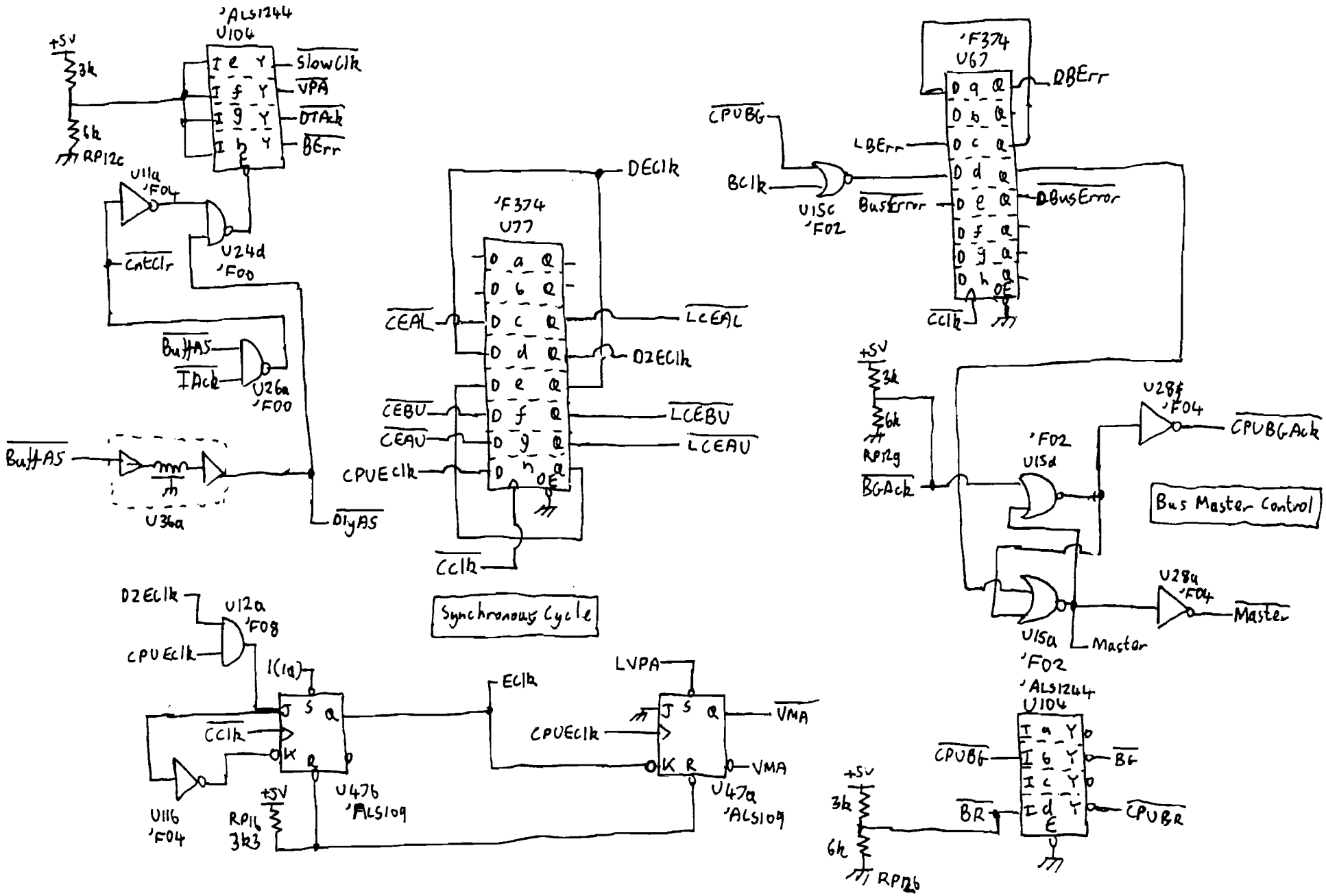

HP9826/HP9836 CPU/MMU PCB Sheet 6 09836-69513 (B-/0)

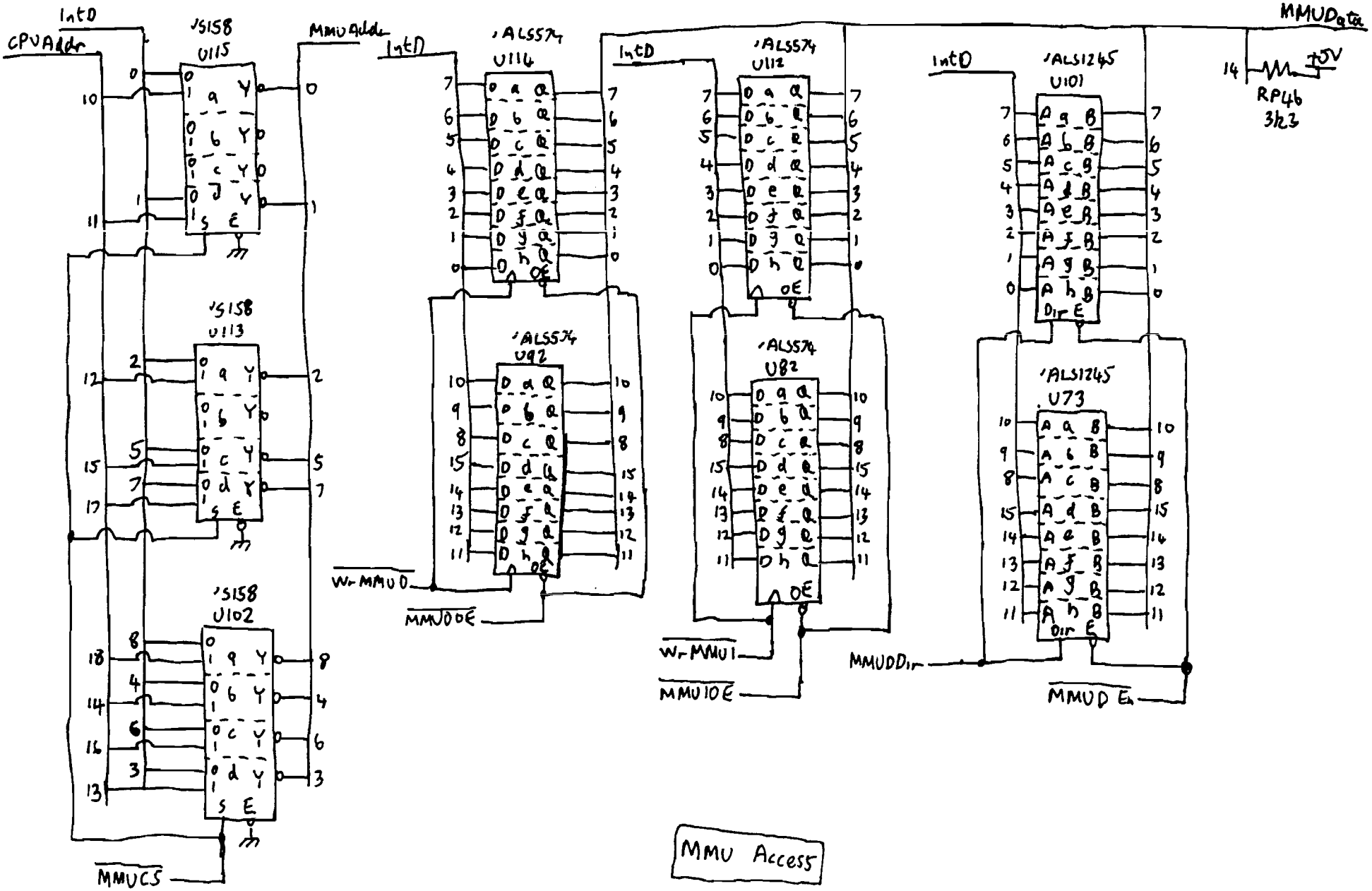

HP9826/HP9836 CPU/MMU PCB sheet 7 09836-69513 (Br/O)

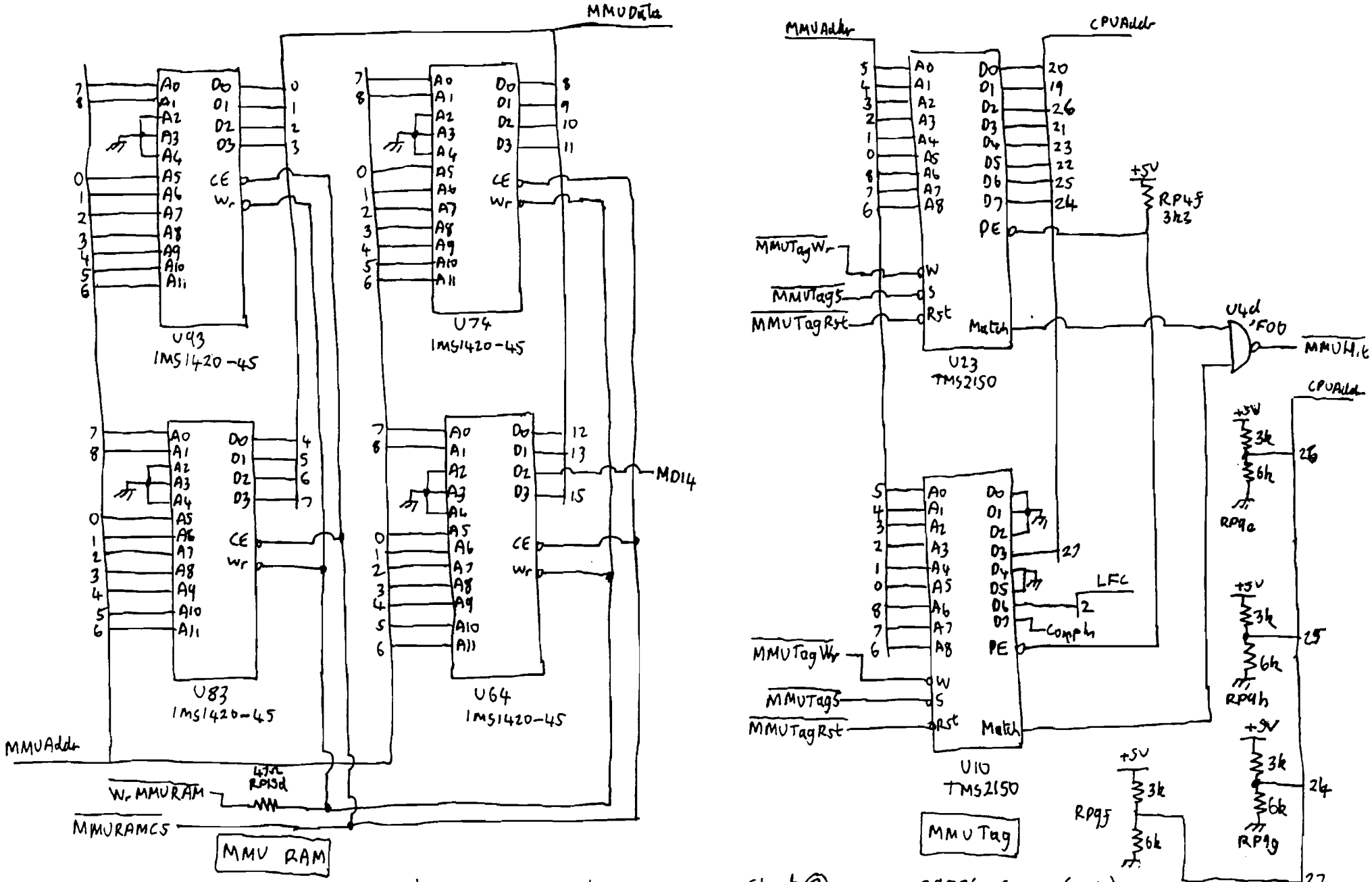

HP9826/HP9836 CPU/MMU PCB Sheet 8 09836-69513 (Br/o)

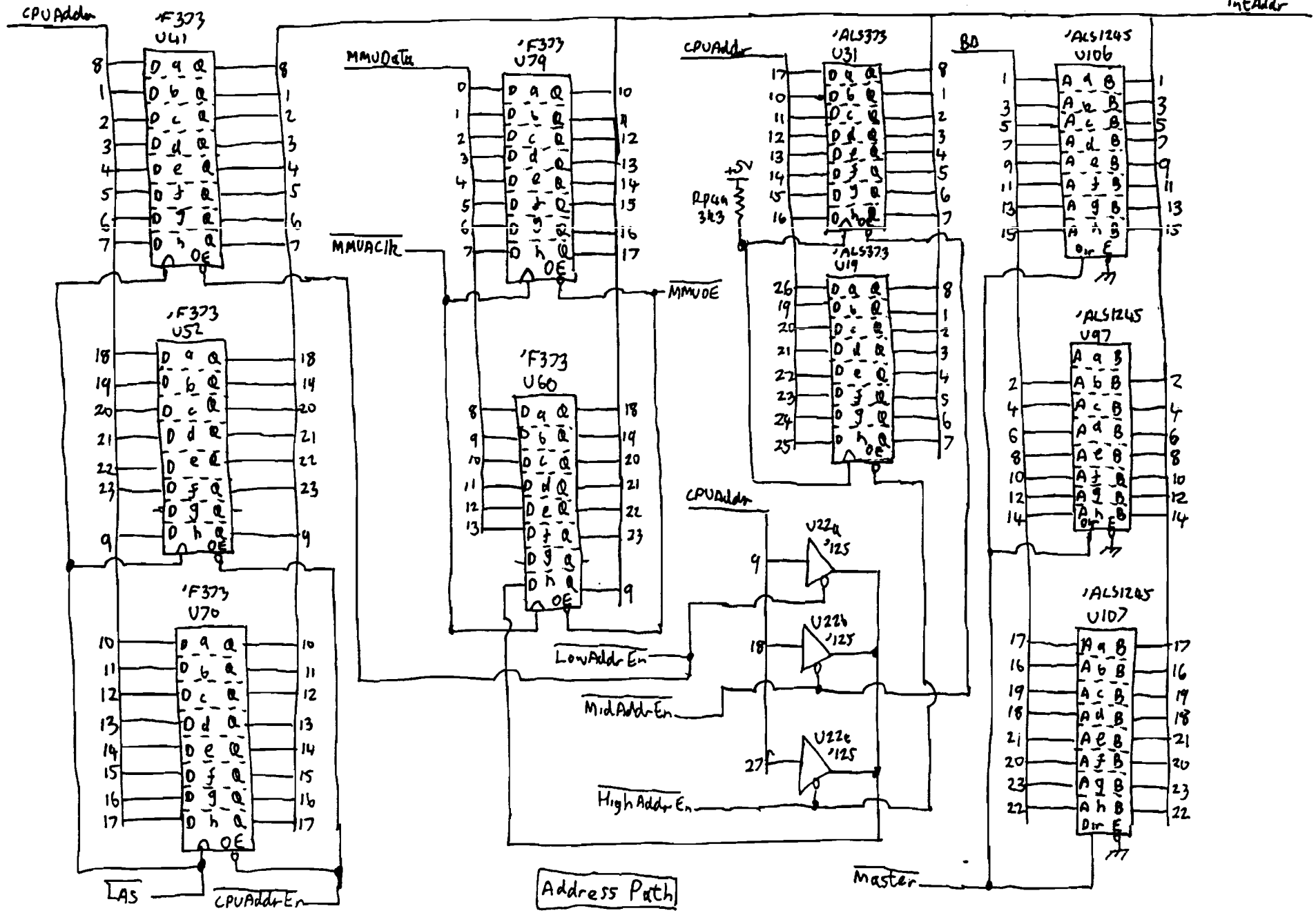

HP9826/HP9836 CPU/MMU PCB Sheet (9) 09836-69513 (Br/6)

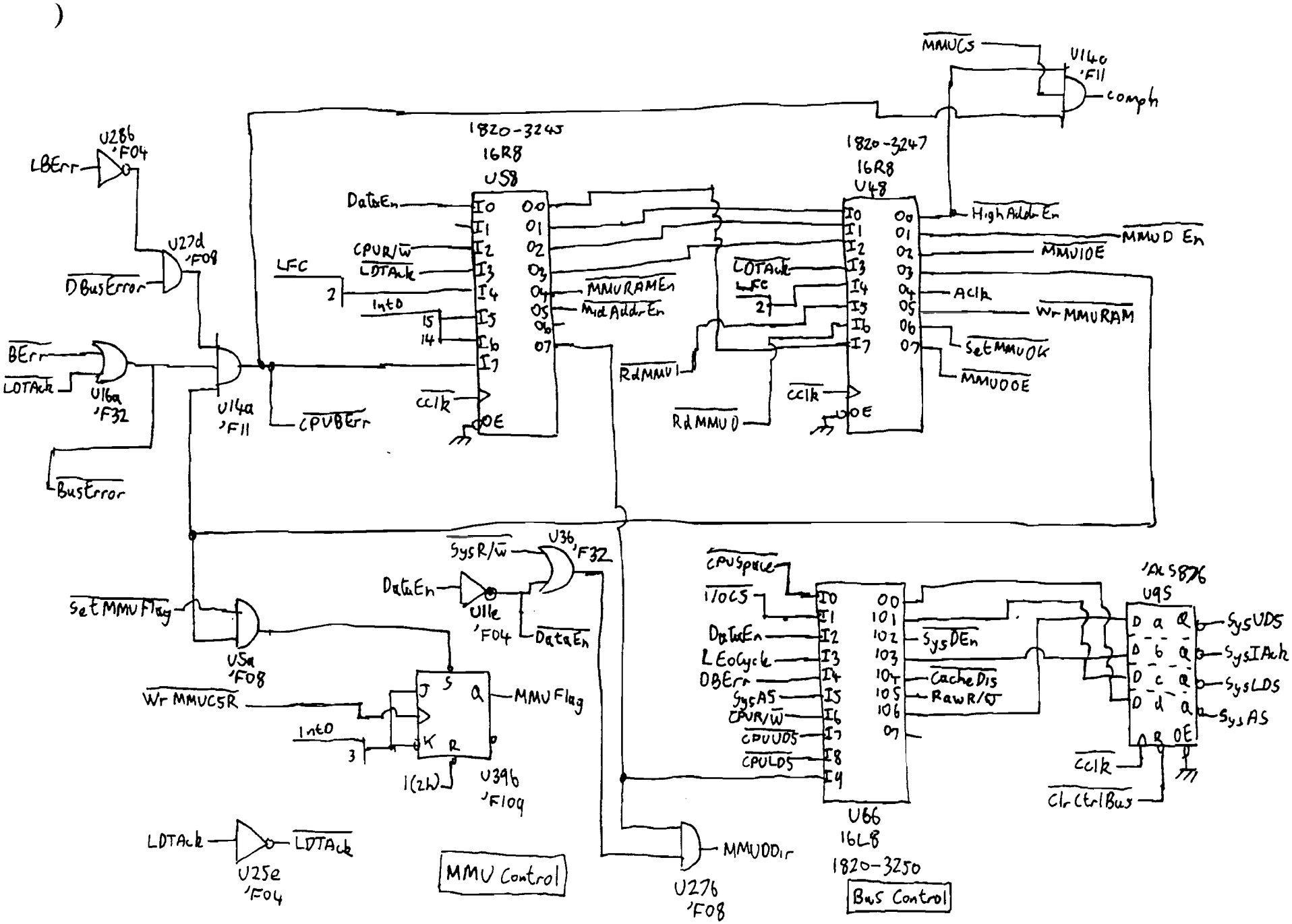

HP9826/HP9836 CPU/MMU PCB Sheet (10) 09836-69513 (Br/0)

)

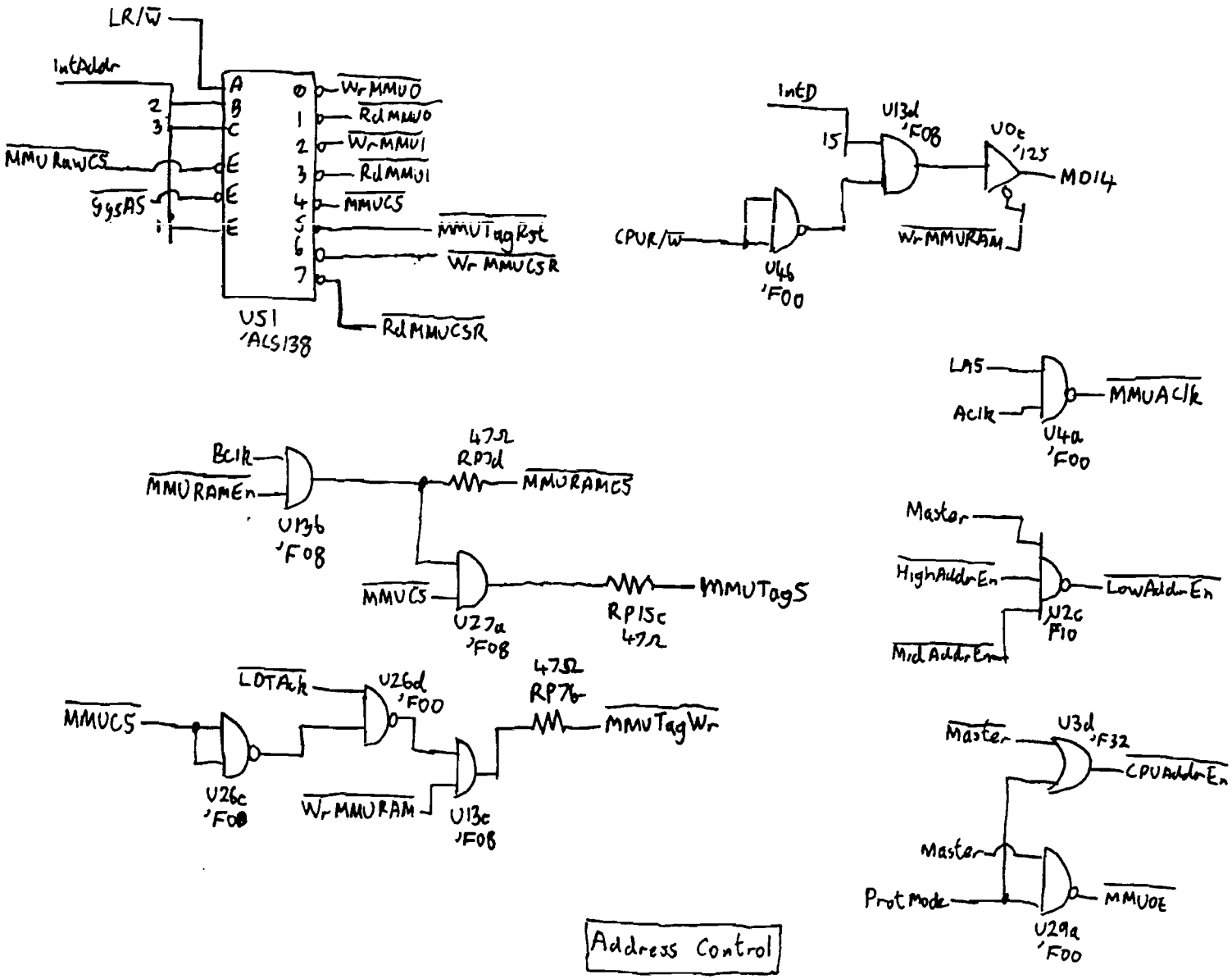

HP9826/HP9836 CPU/MMU PCB Sheet (11) 09836-69513

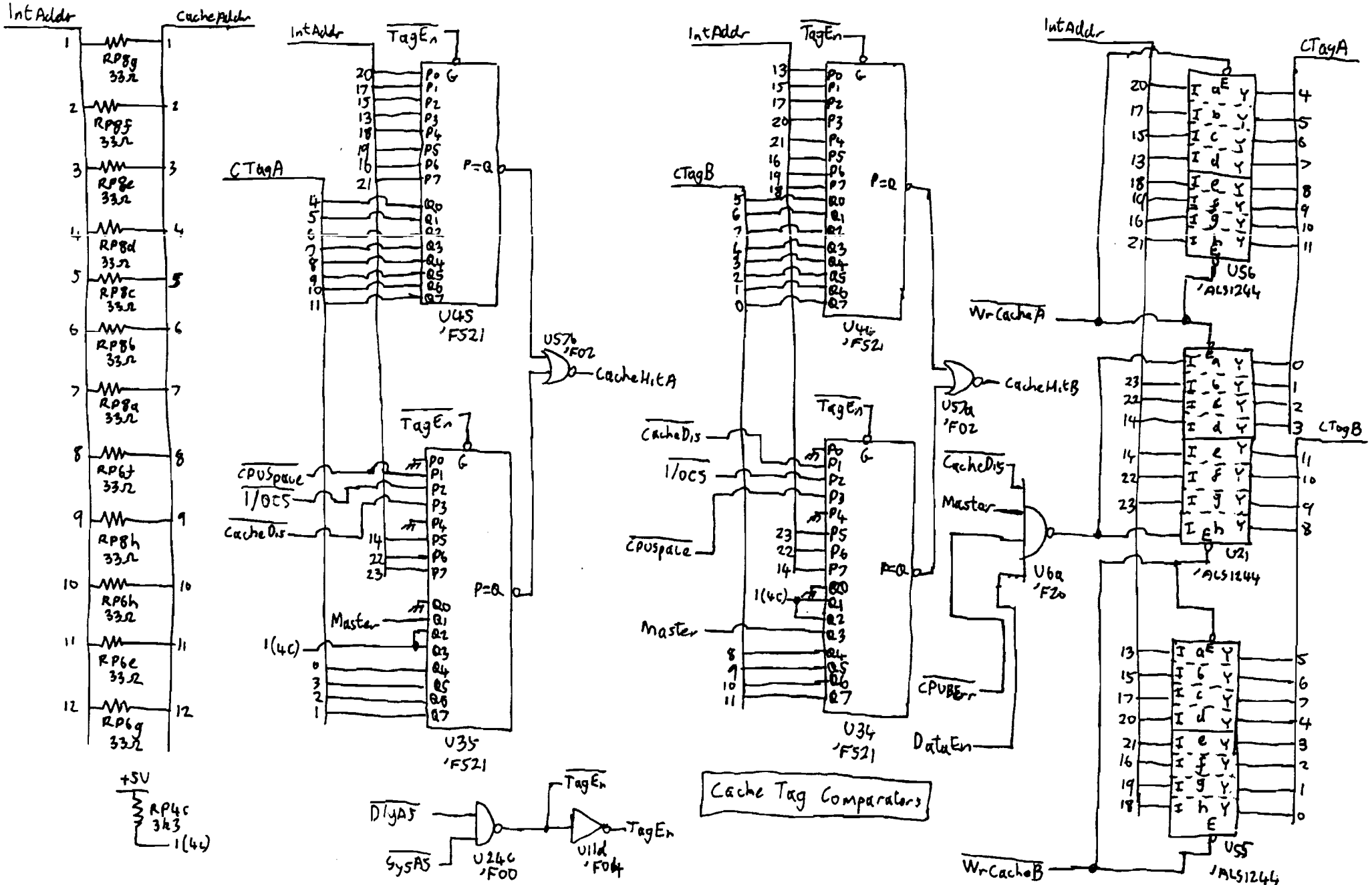

HP9826/HP9836 CPU/MMU PCB Sheet 12 09836-69513

)

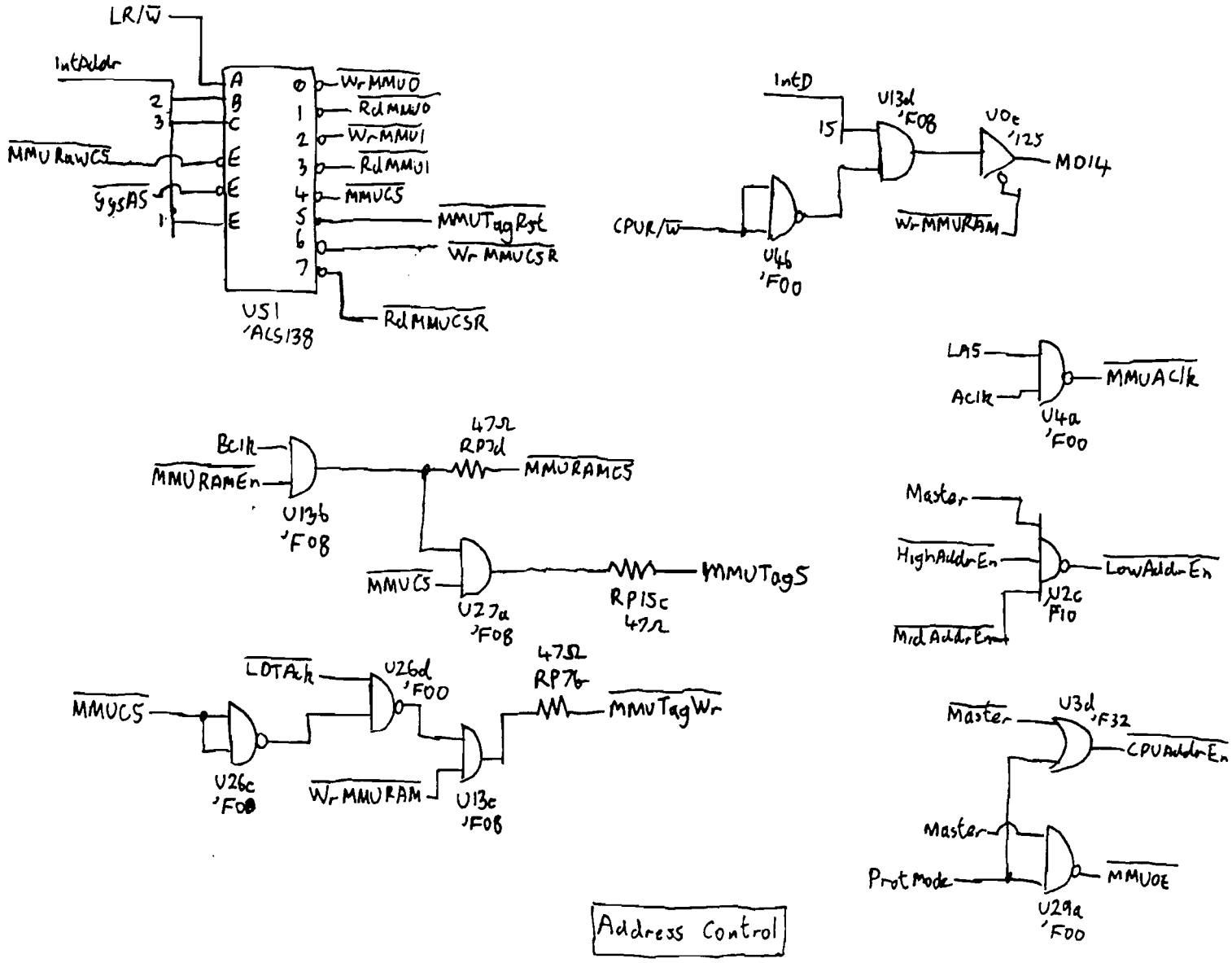

Address Control

HP9826/HP9836 CPU/MMU PCB Sheet 11 09836-69513

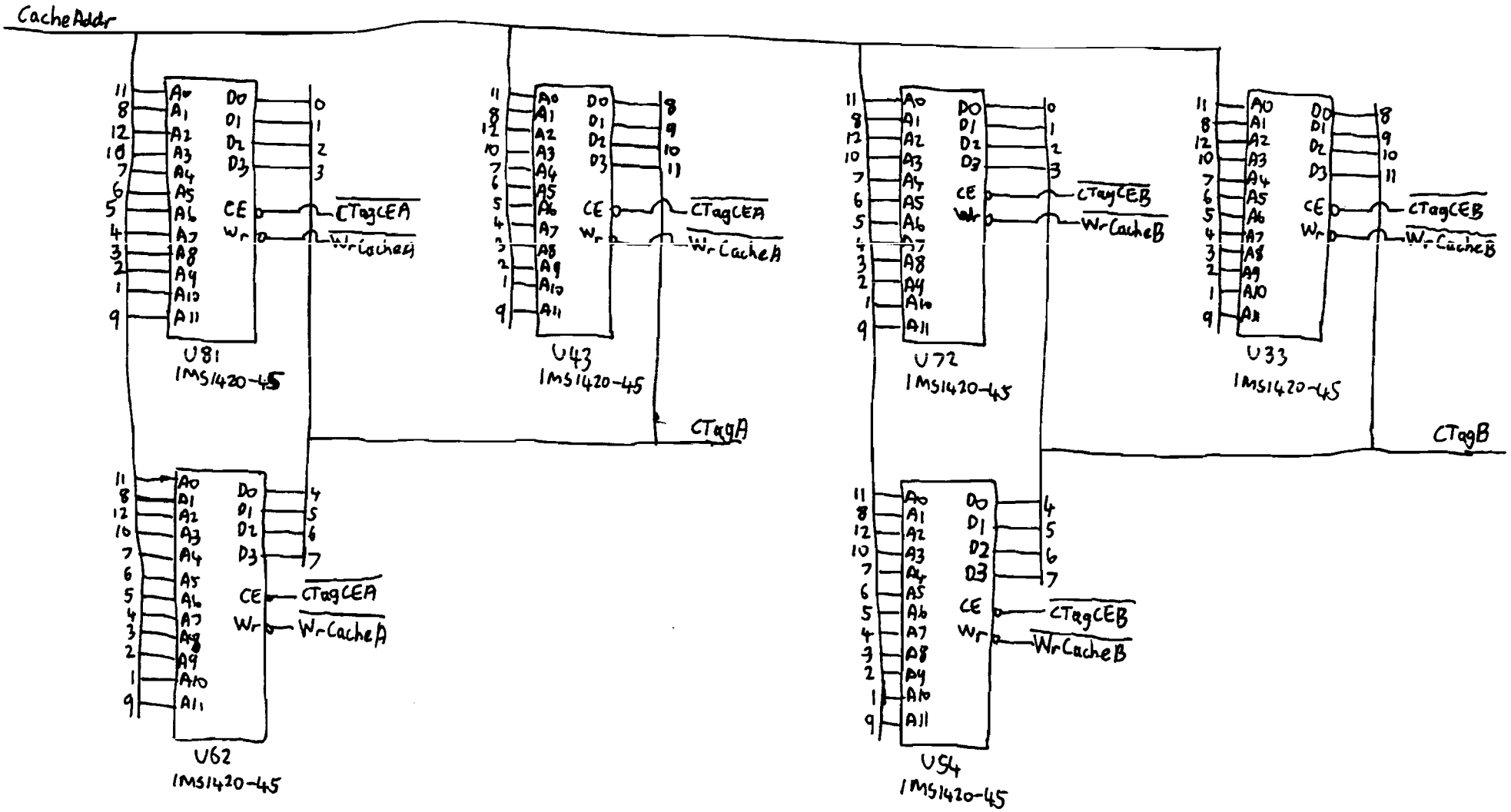
CacheAddr
U81
IMS1420-45
U43
IMS1420-45
U72
IMS1420-45
U33
IMS1420-45
U62
IMS1420-45
U54
IMS1420-45
CTagCEA
WrCacheA
CTagCEB
WrCacheB
CTagA
CTagB

Cache Tag

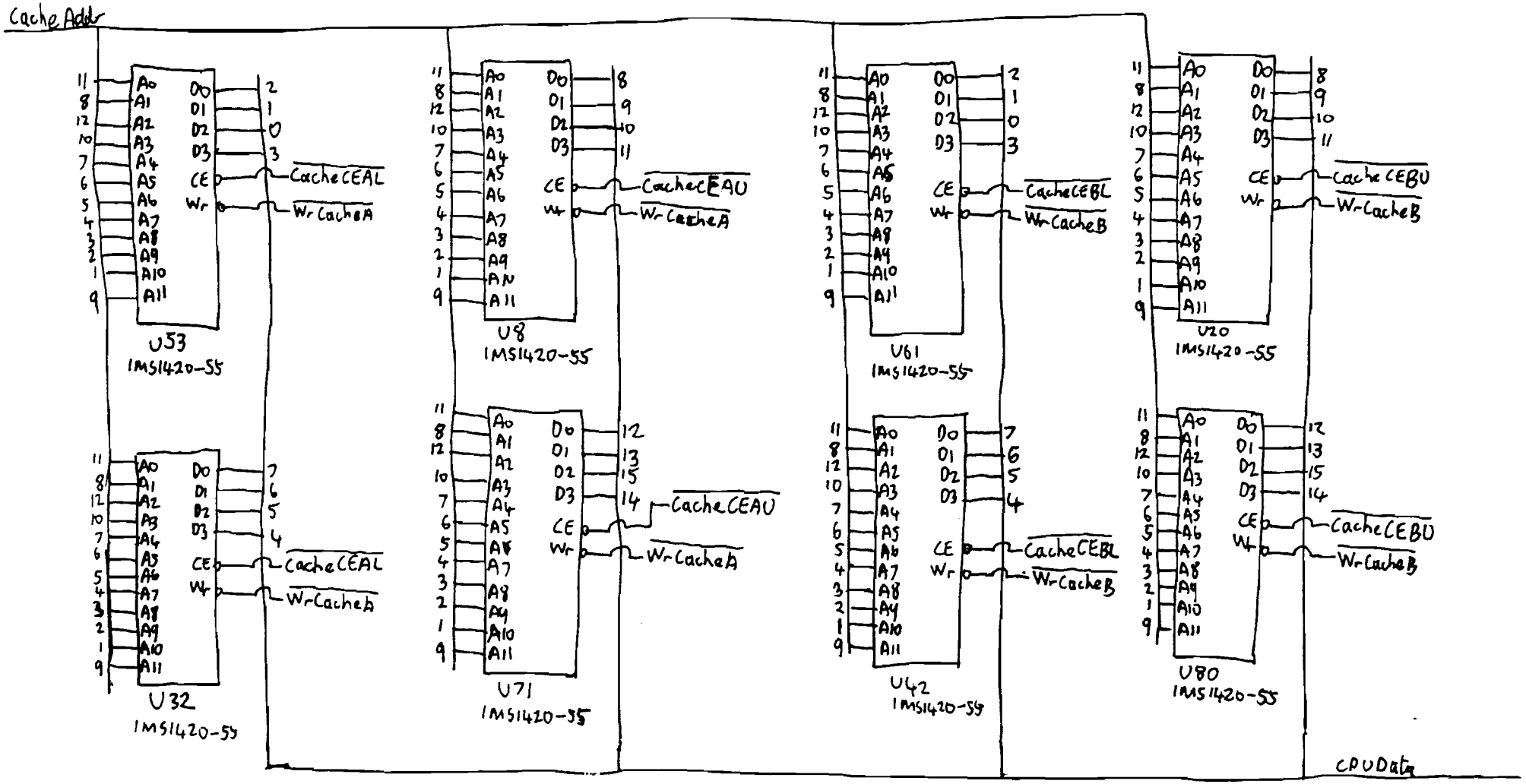
CacheAddr
U53
1MS1420-55
U8
1MS1420-55
U61
1MS1420-55
U20
1MS1420-55
U32
1MS1420-55
U71
1MS1420-55
U42
1MS1420-55
U80
1MS1420-55
CacheCEAL
WrCacheA
CacheCEAU
WrCacheA
CacheCEBL
WrCacheB
CacheCEBU
WrCacheB
CacheCEAL
WrCacheA
CacheCEAU
WrCacheA
CacheCEBL
WrCacheB
CacheCEBU
WrCacheB
CPUData

Cache RAM

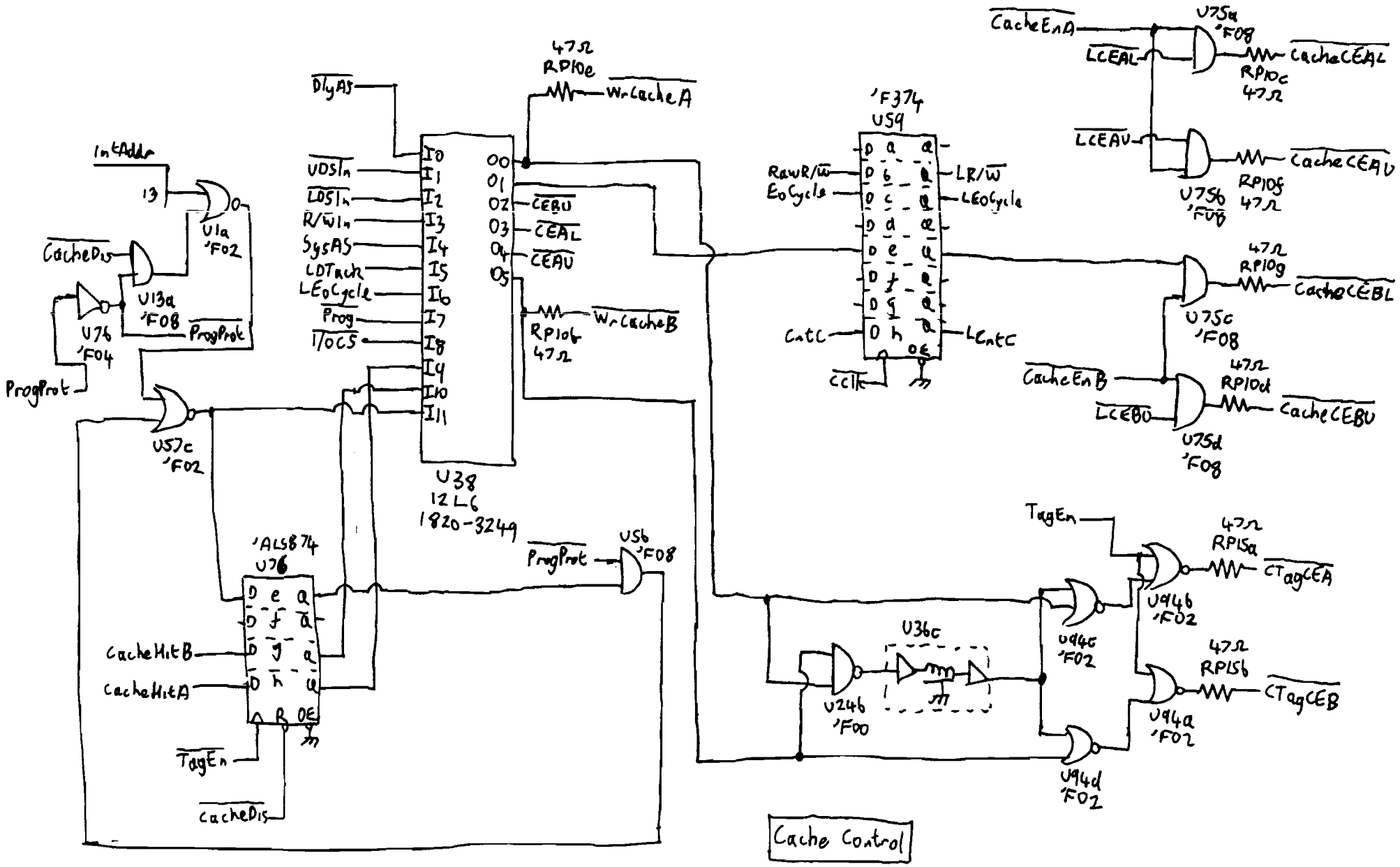

HP9826/HP9836 CPU/MMU PCB Sheet 15 09836-69513 (Br/o)

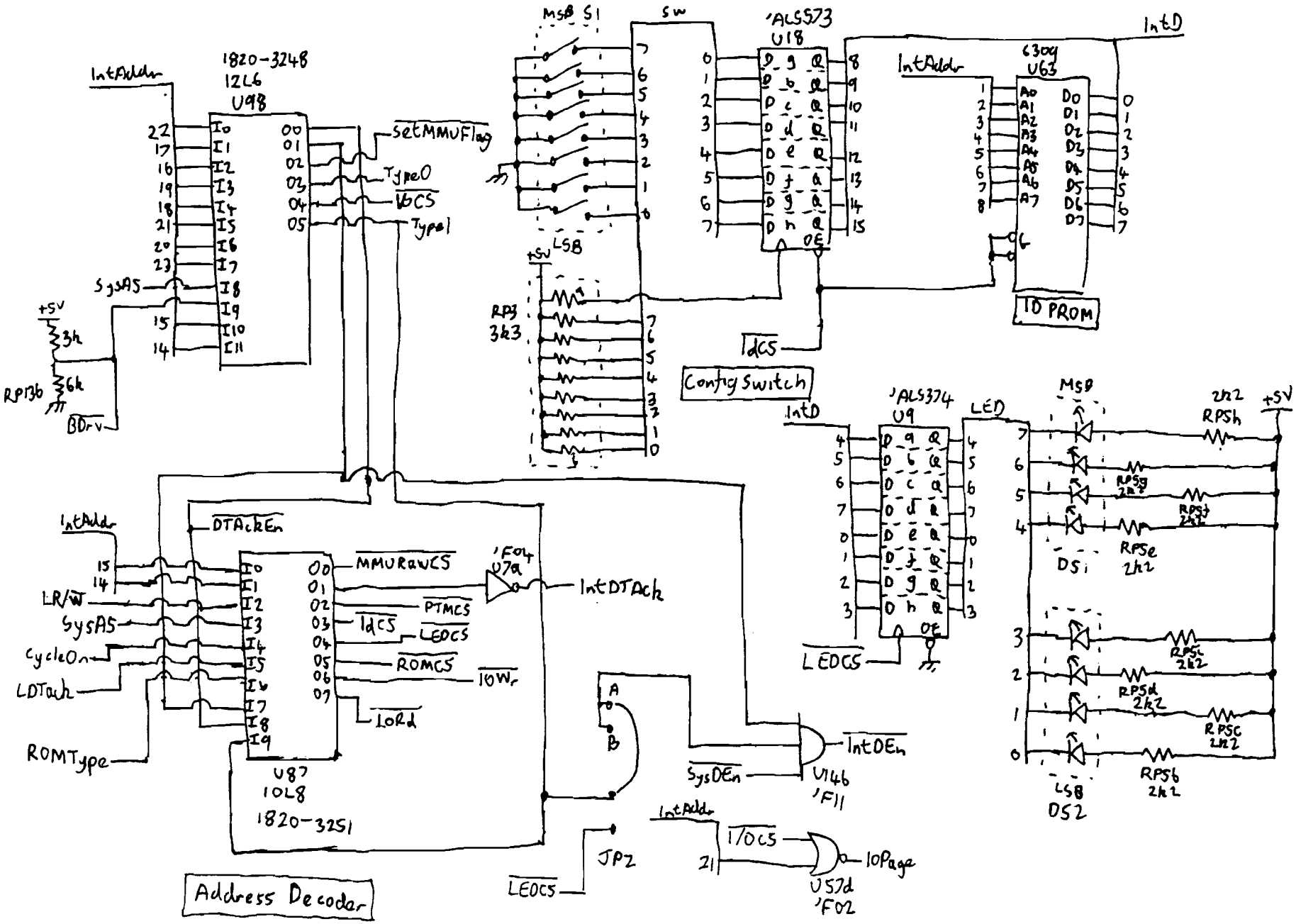

HP9826/HP9836 CPU/MMU PCB Sheet (16) 09836-69513 (B-/0)

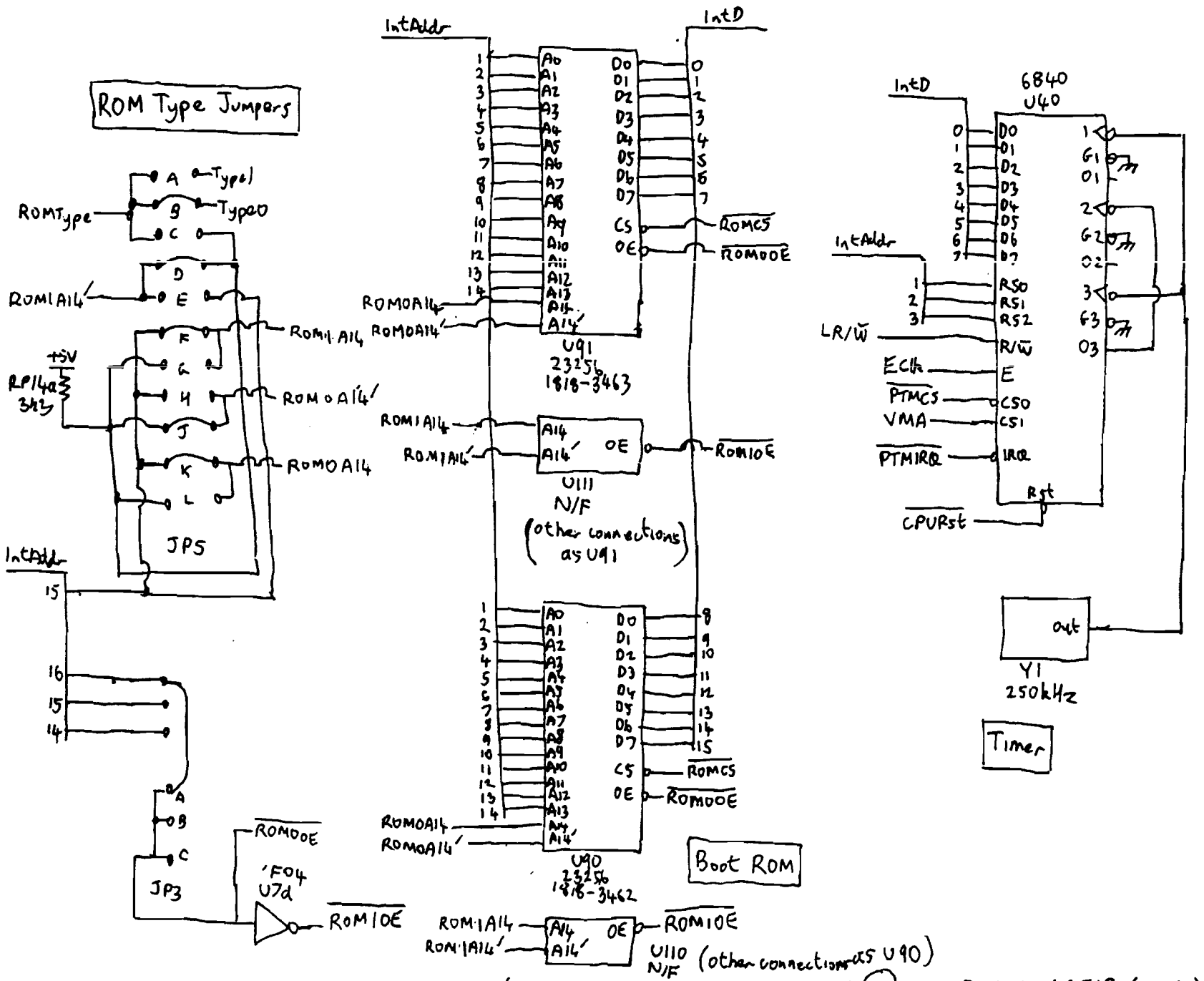

HP9826 /HP9836 CPU/MMU PCB Sheet (17) 09836-69513 (Br/0)

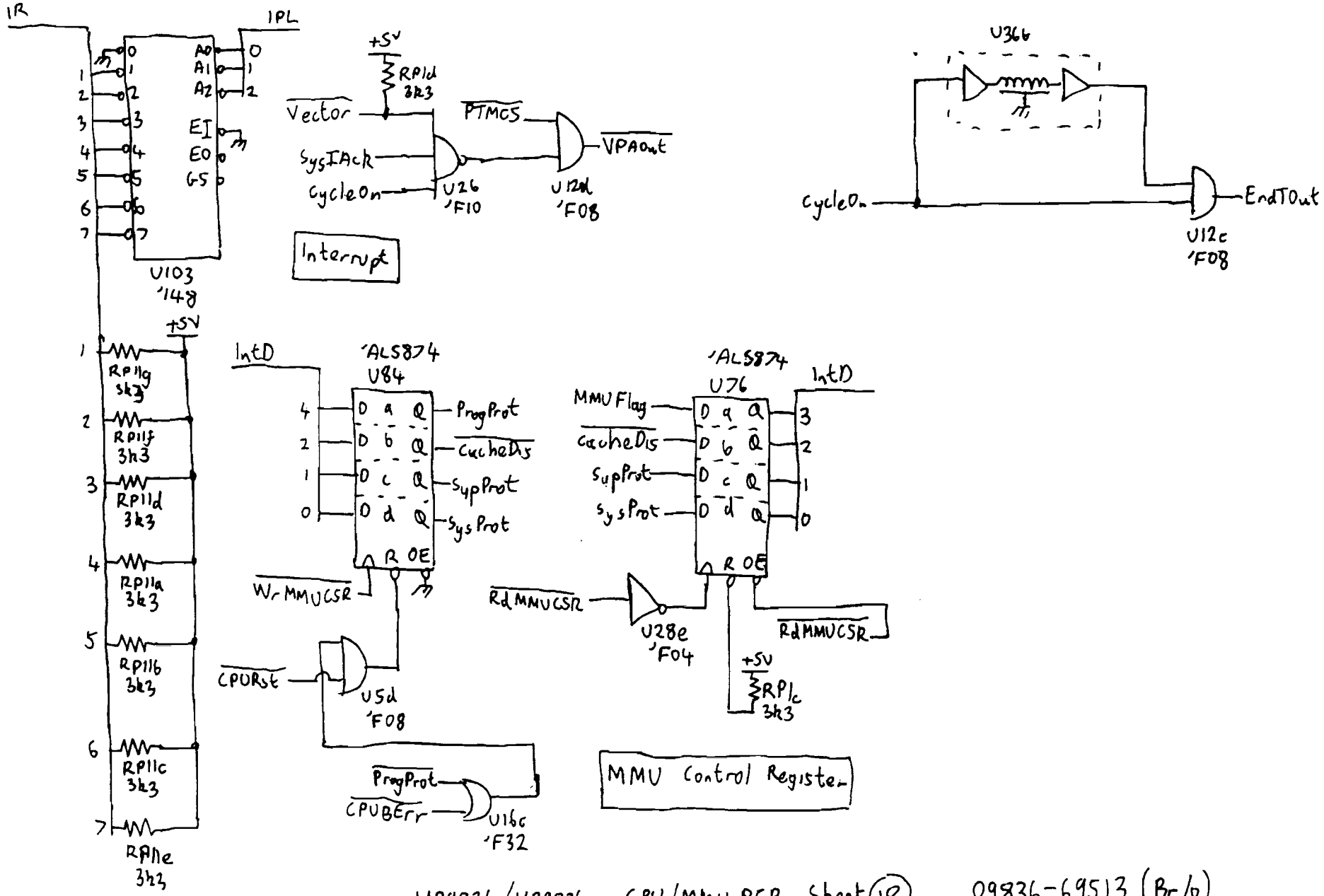

HP9826/HP9836 CPU/MMU PCB Sheet (18) 09836-69513 (Br/0)

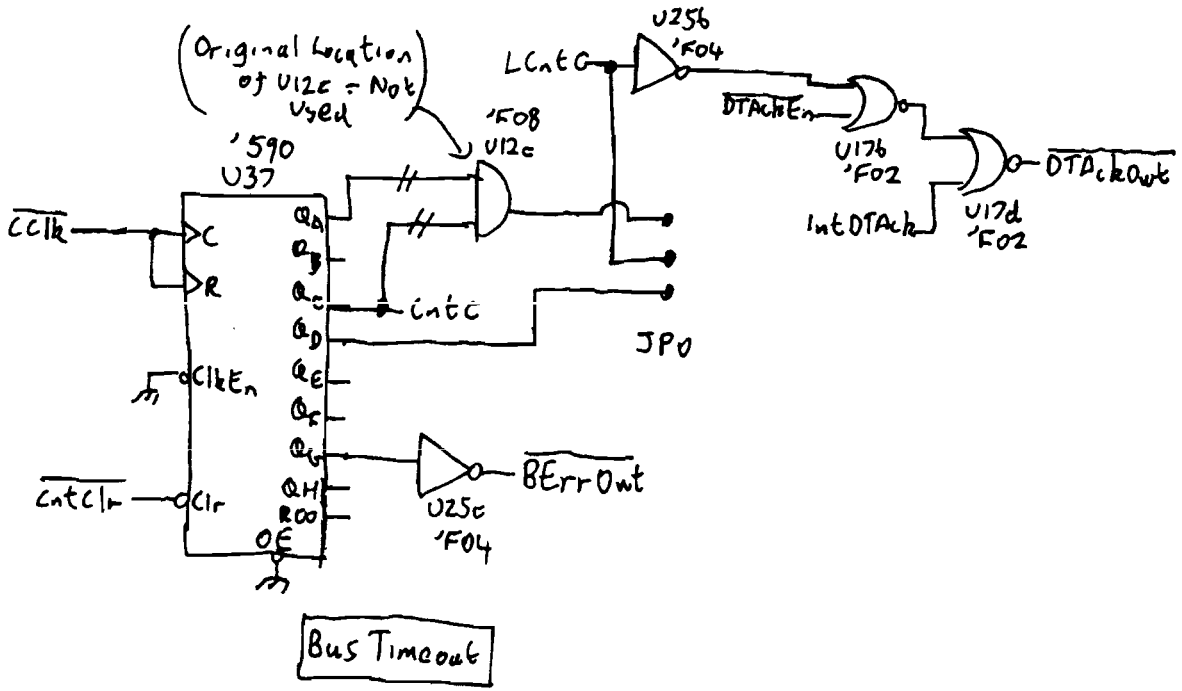
(Original Location of U12c = Not Used)
'590
U37
CClk
C
R
ClkEn
CntClr
Clr
QA
QB
QC
QD
QE
QF
QG
QH
RCO
OE
CntC
'F08
U12c
LCntC
U25b
'F04
DTAckEn
U17b
'F02
IntDTAck
U17d
'F02
DTAckOut
JP0
U25c
'F04
BErrOut
Bus Timeout

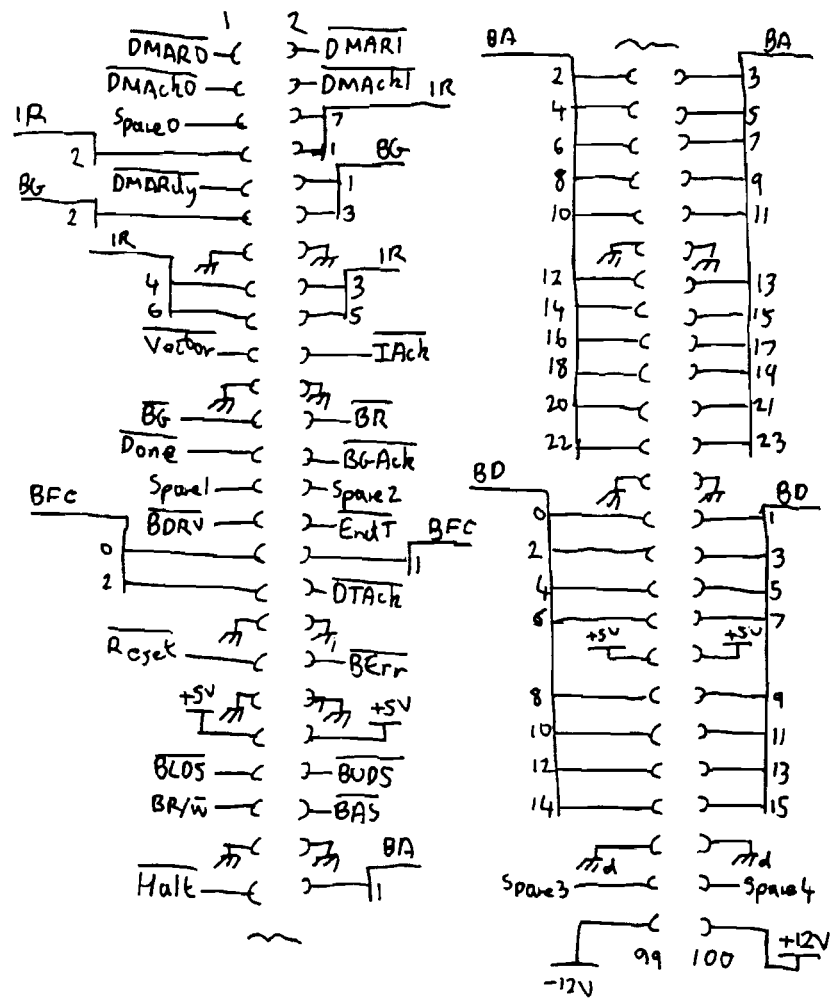

J2
(Backplane)

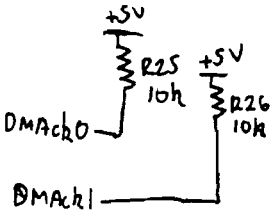

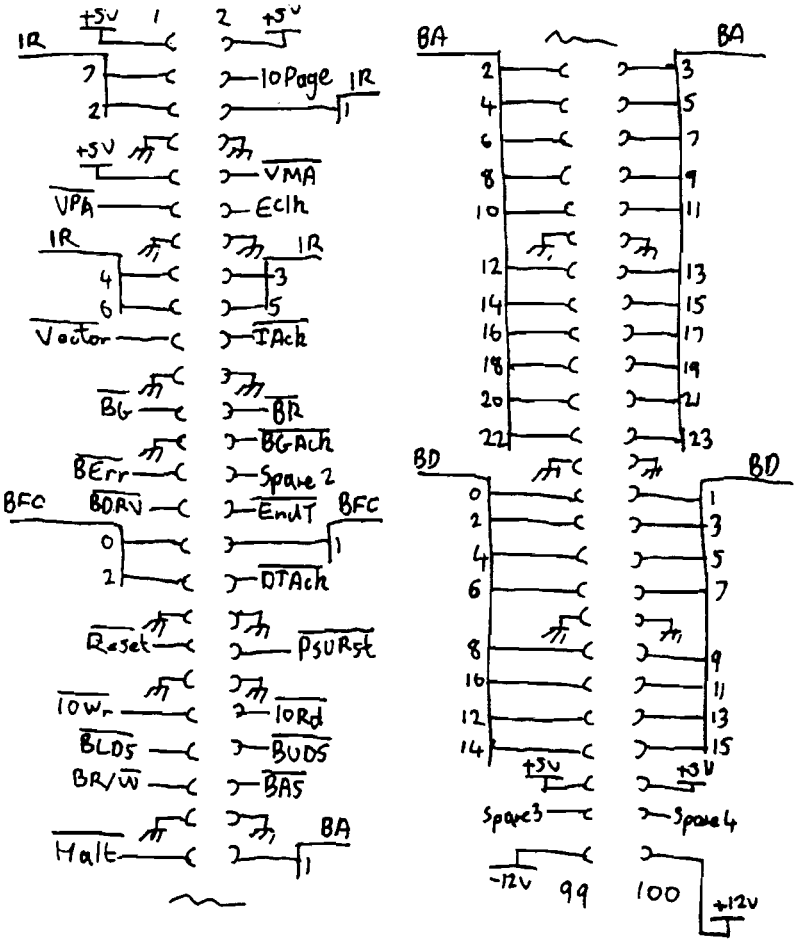

J3
(CPU)

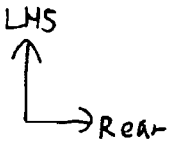

HP9826 Motherboard Sheet (1)

09826-66501

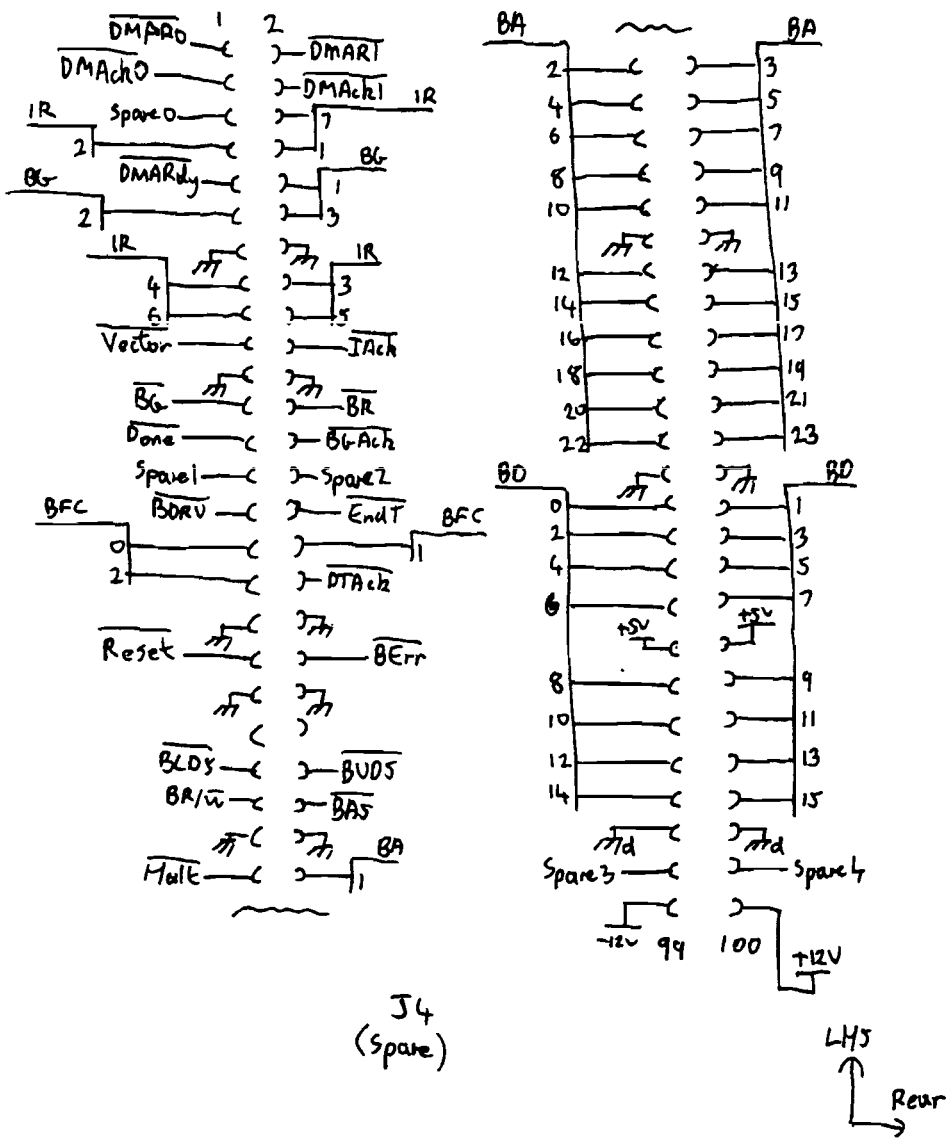

J4
(Spare)

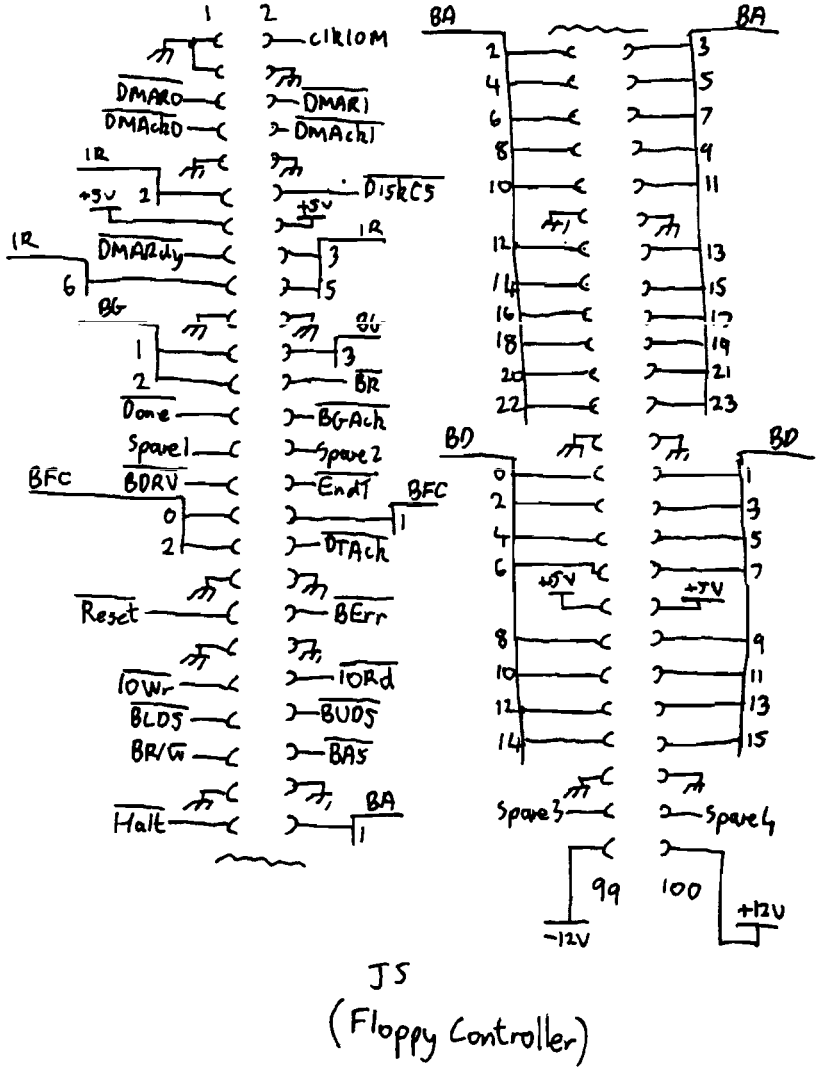

J5
(Floppy Controller)

HP9826 Motherboard Sheet 2 09826-66501

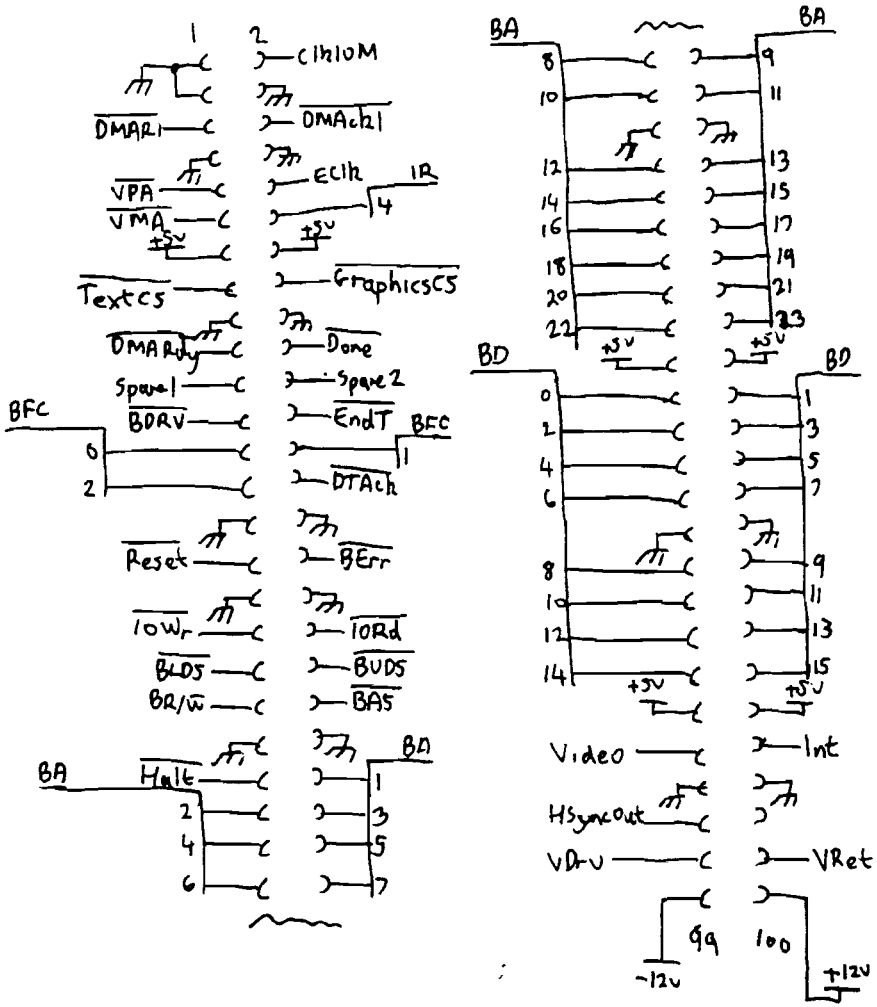

J6
(Text Video)

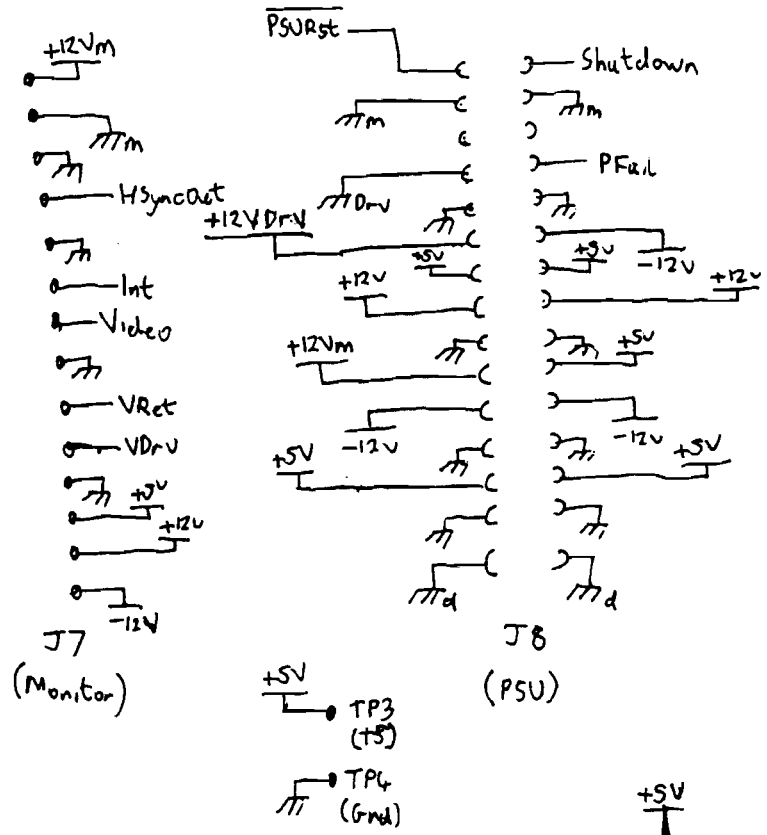

J7
(Monitor)

J8
(PSU)

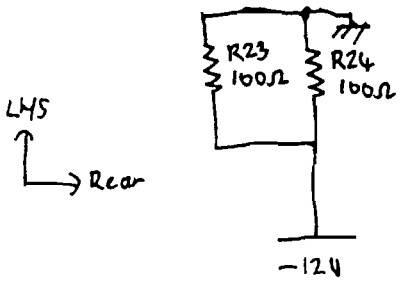

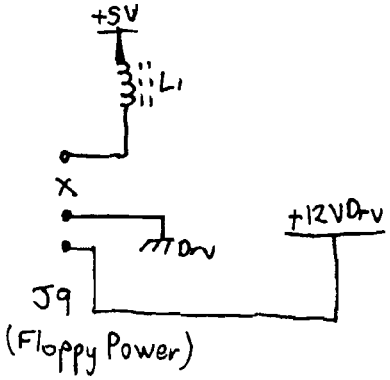

J9
(Floppy Power)

HP9826 Motherboard Sheet 3

09826-66501

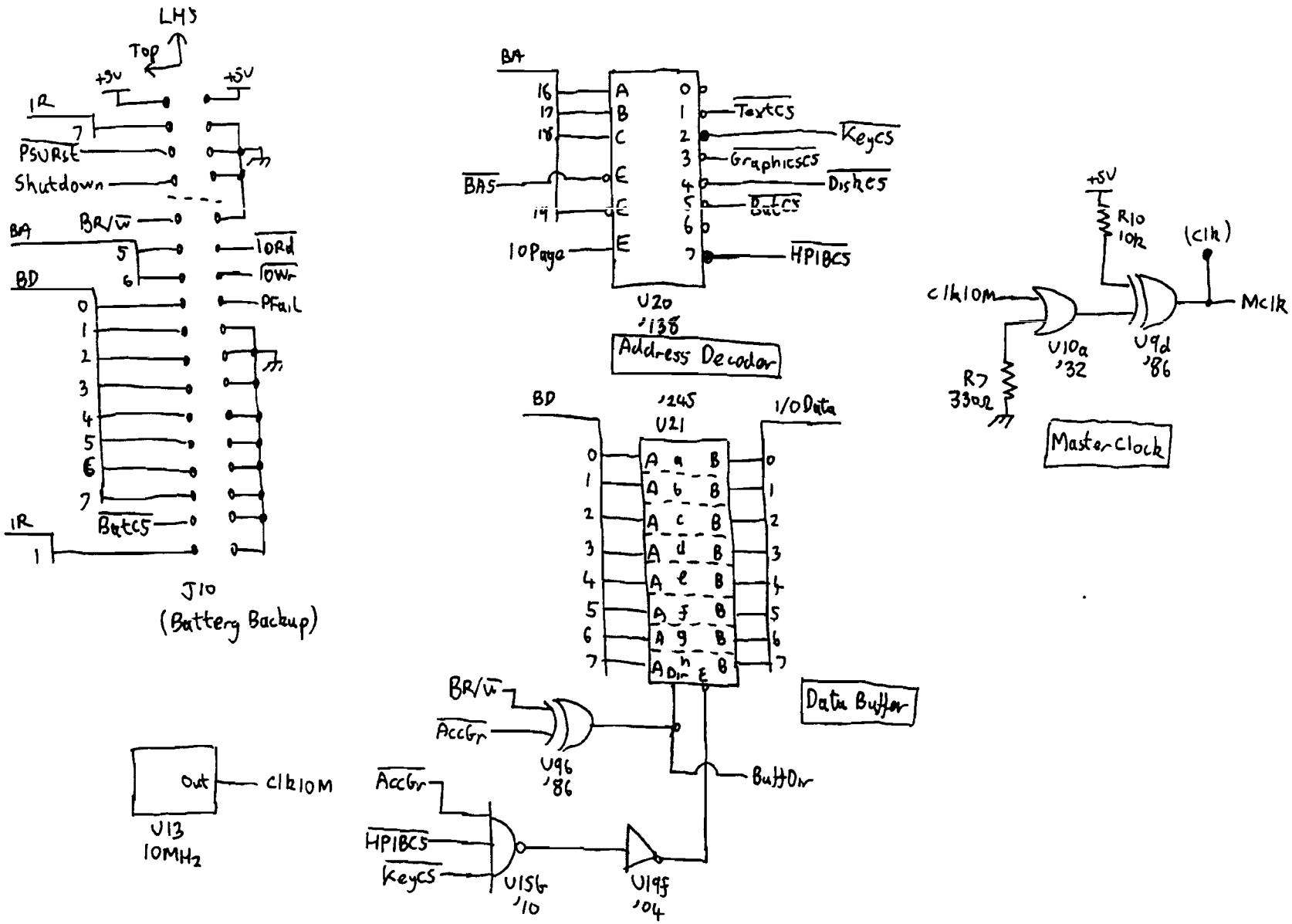

HP9826 Motherboard Sheet 4 09826-66501

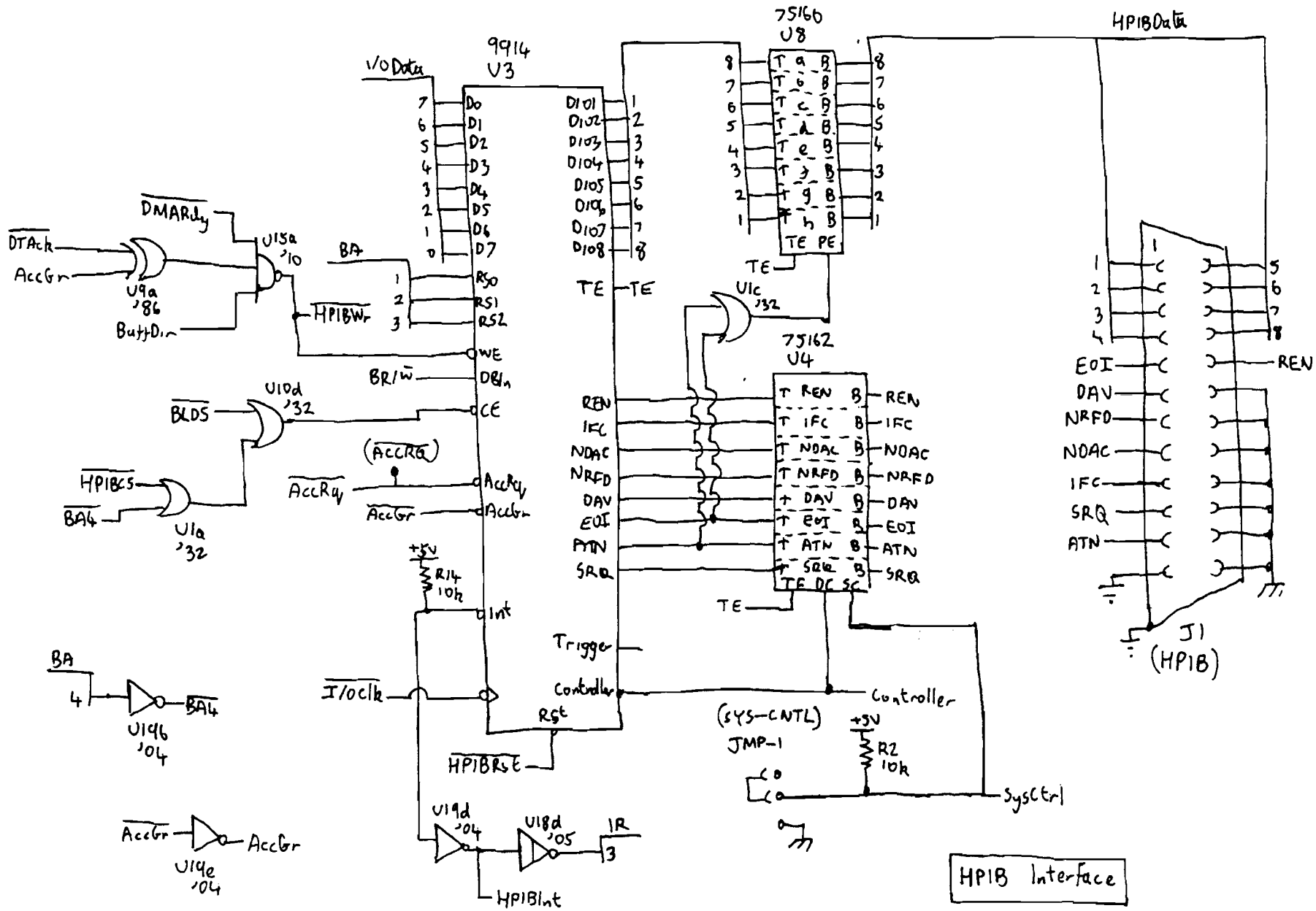

HP9826 Motherboard Sheet (5) 09826-66501

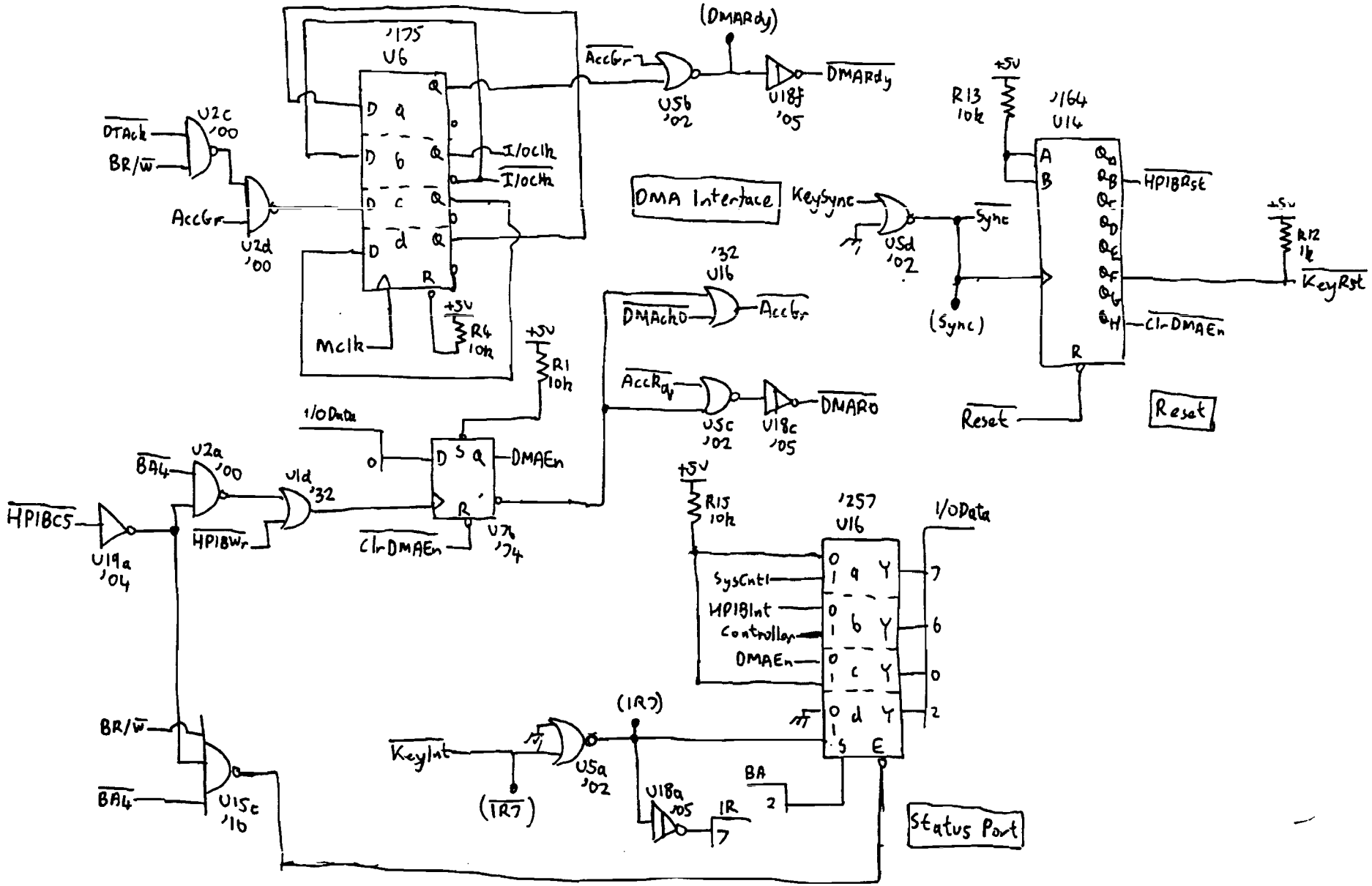

HP9826 Motherboard Sheet (6) 09826-66501

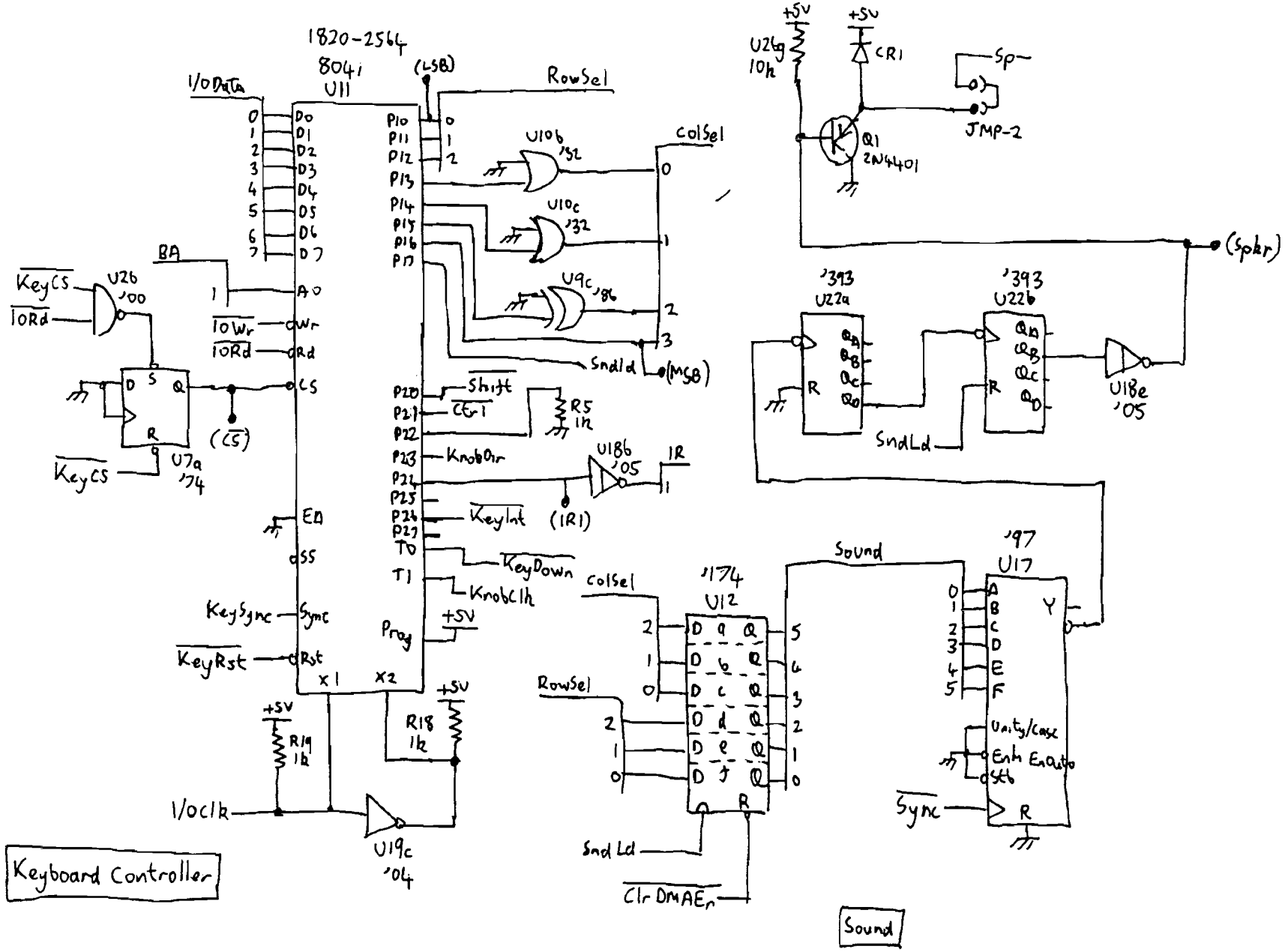

HP9826 Motherboard Sheet 7 09826-66501

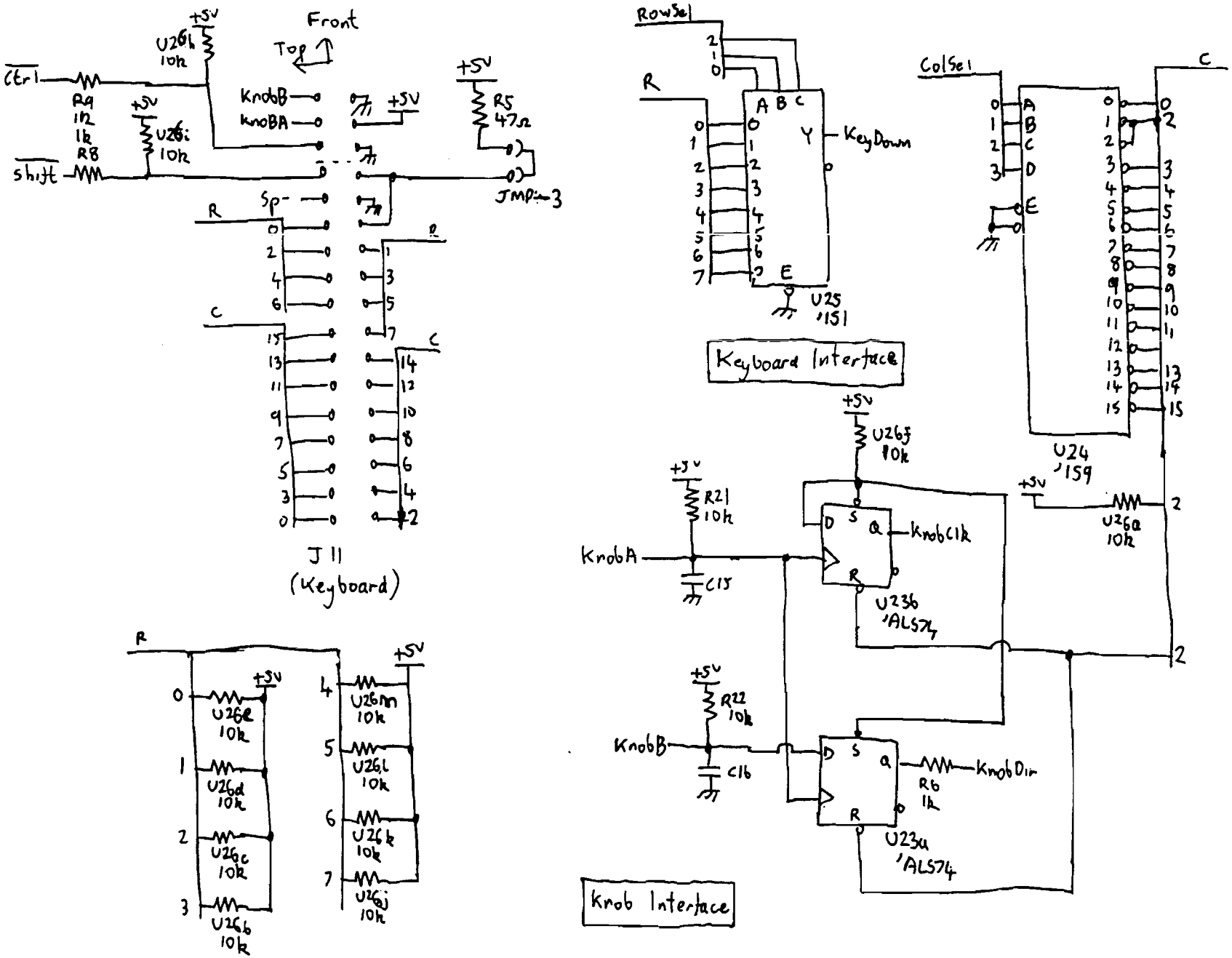

HP9826 Motherboard Sheet (2) 09826-66501

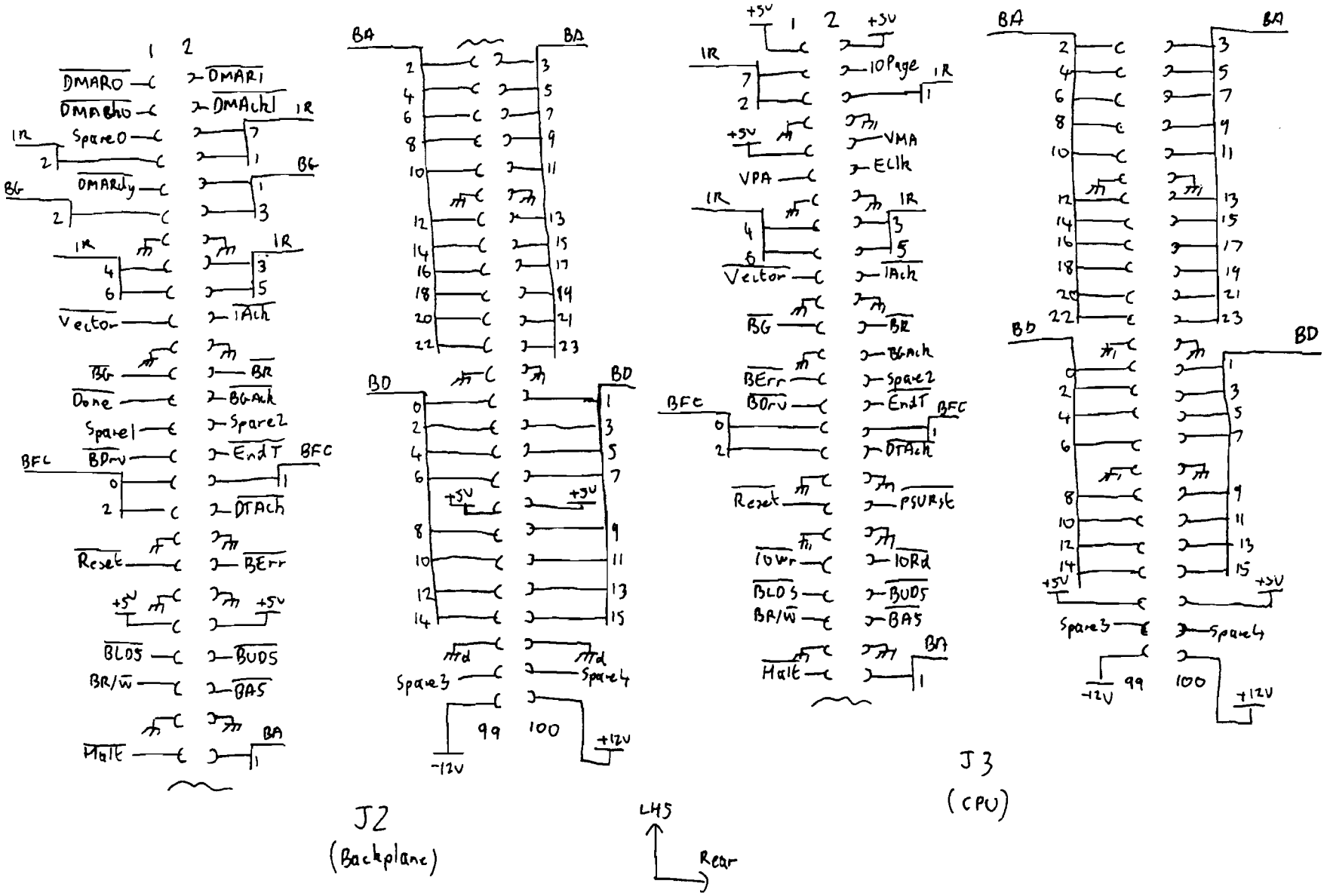

HP9836 Motherboard Sheet 1 09836-69502

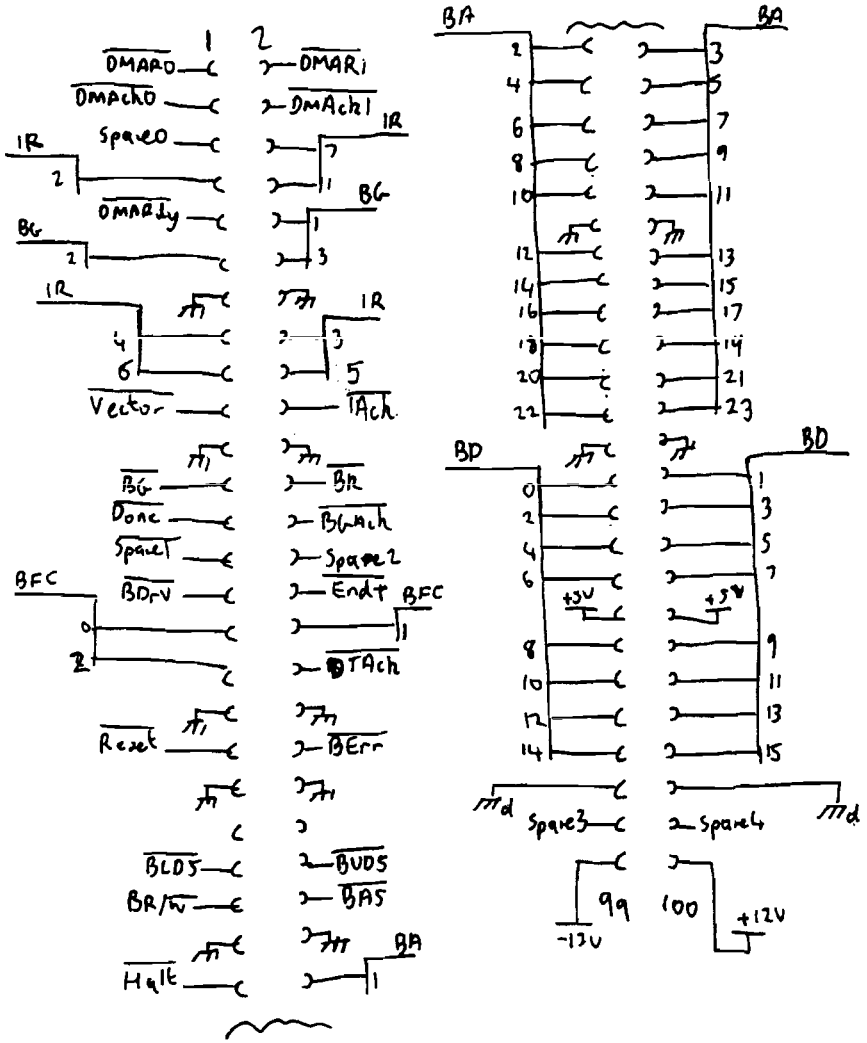

J4
(Spare)

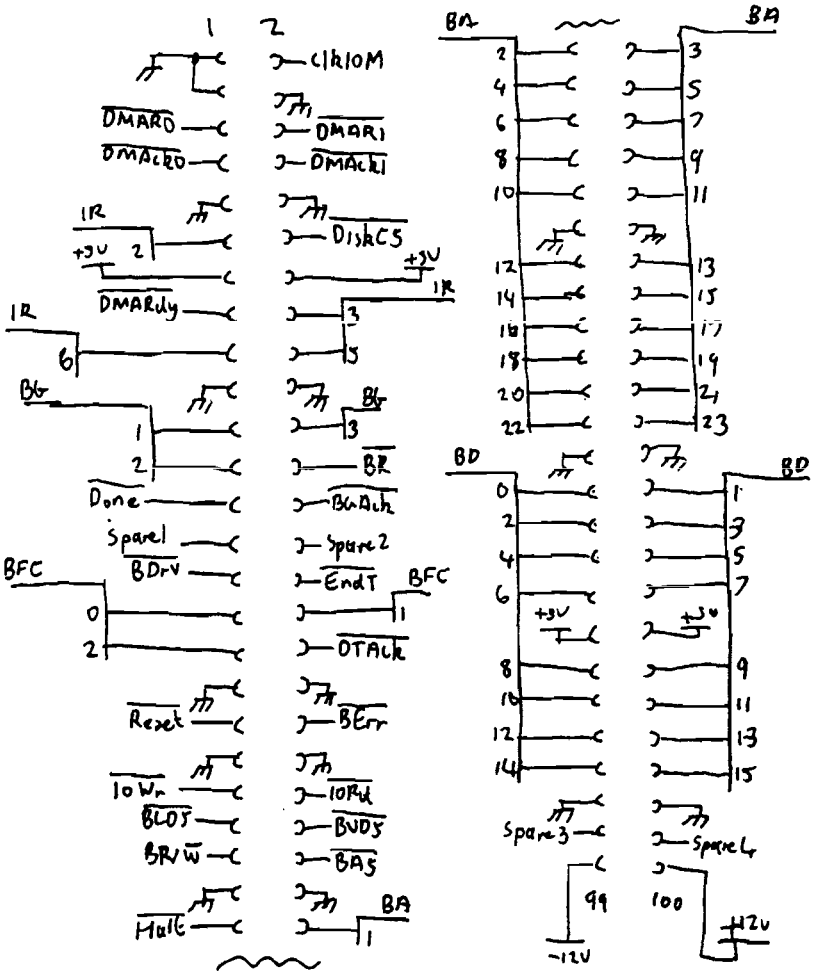

J5
(Floppy Controller)

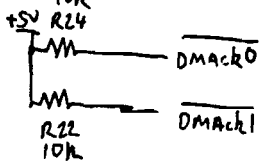

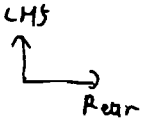

HP9836 Motherboard Sheet 2

09836-69502

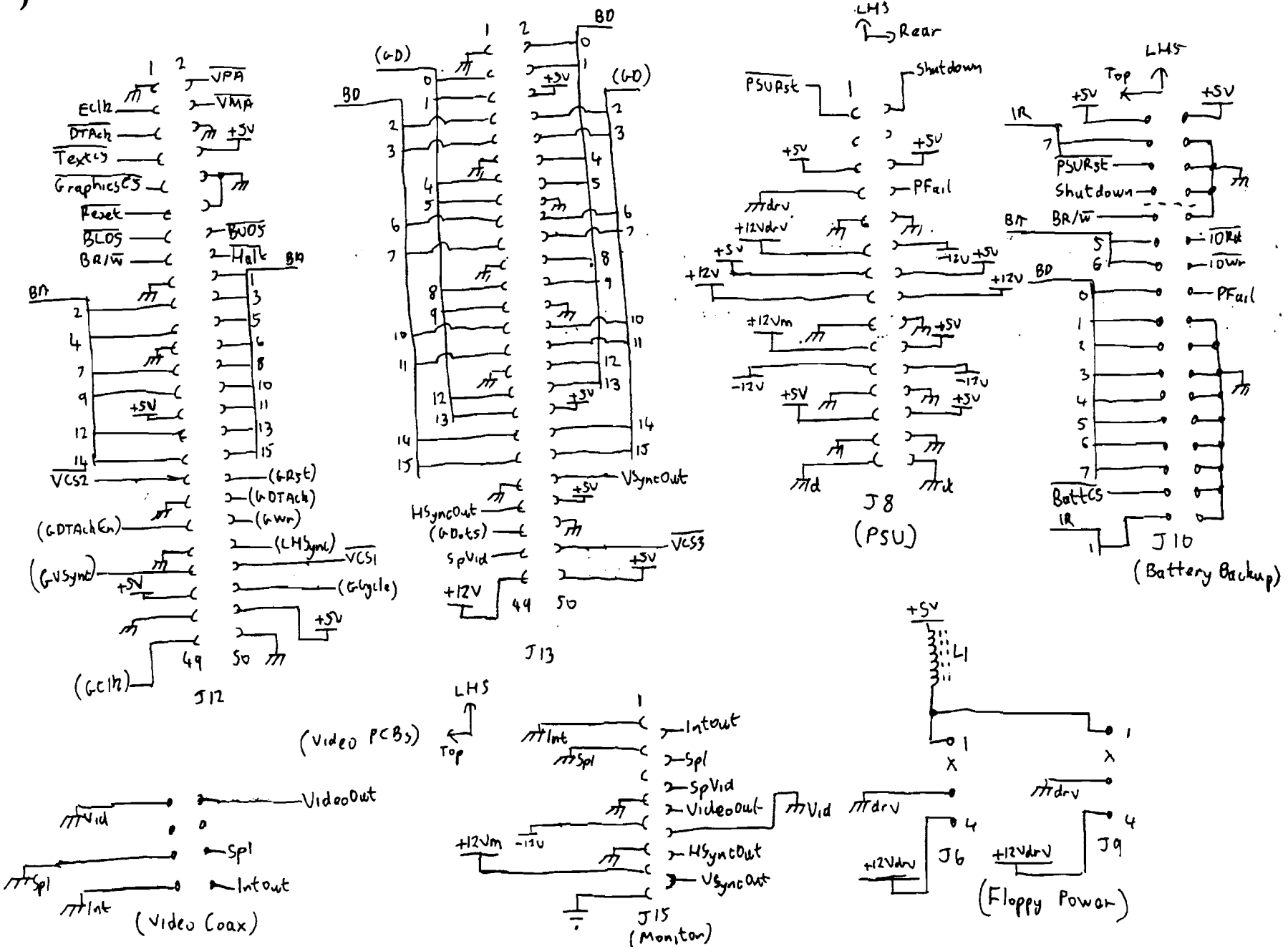

HP4836A Motherboard Sheet 3

04836-69502

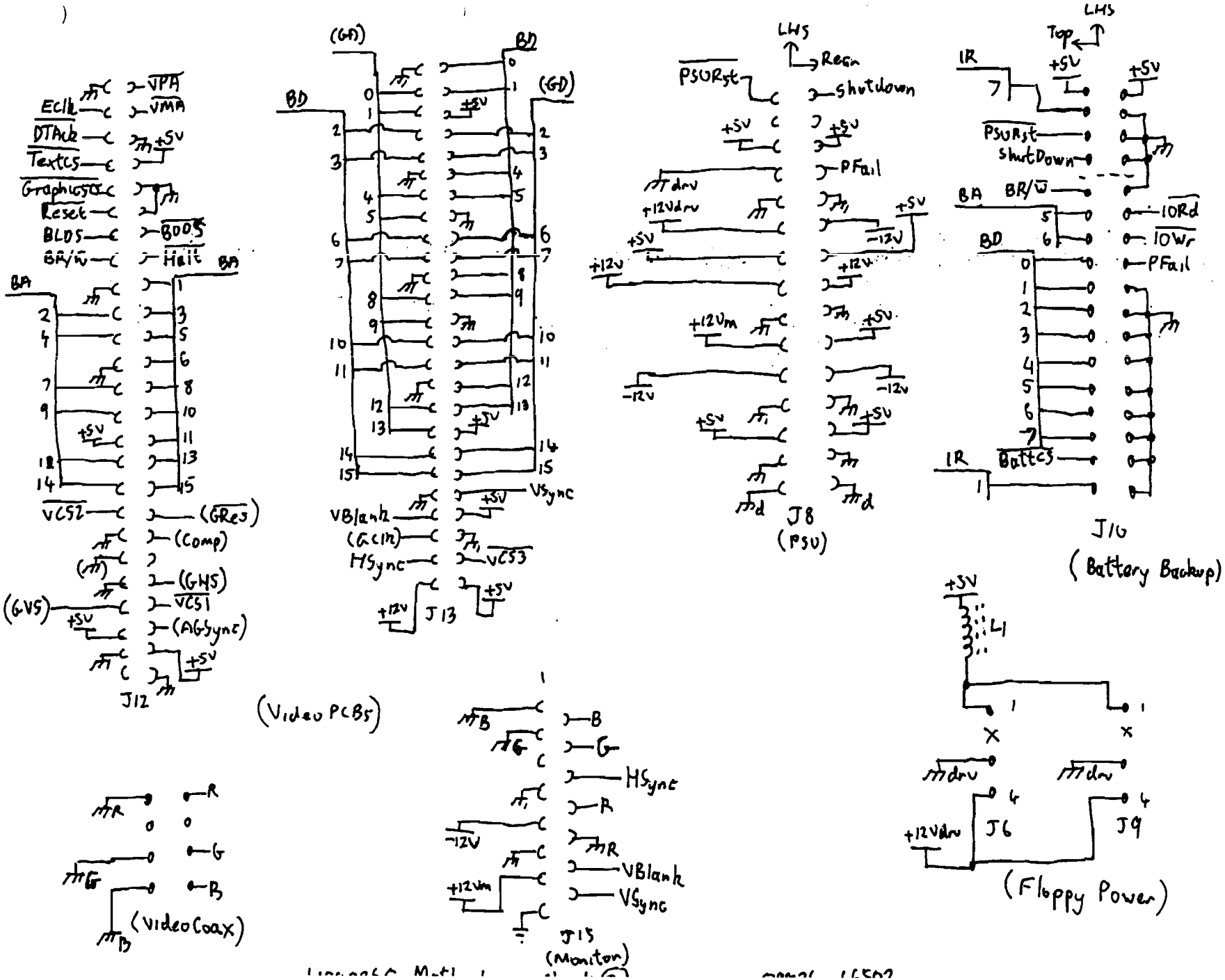
J12
(Video PCBs)
J13
(Monitor)
(Video Coax)
J8
(PSU)
J10
(Battery Backup)
J6
J9
(Floppy Power)
L1

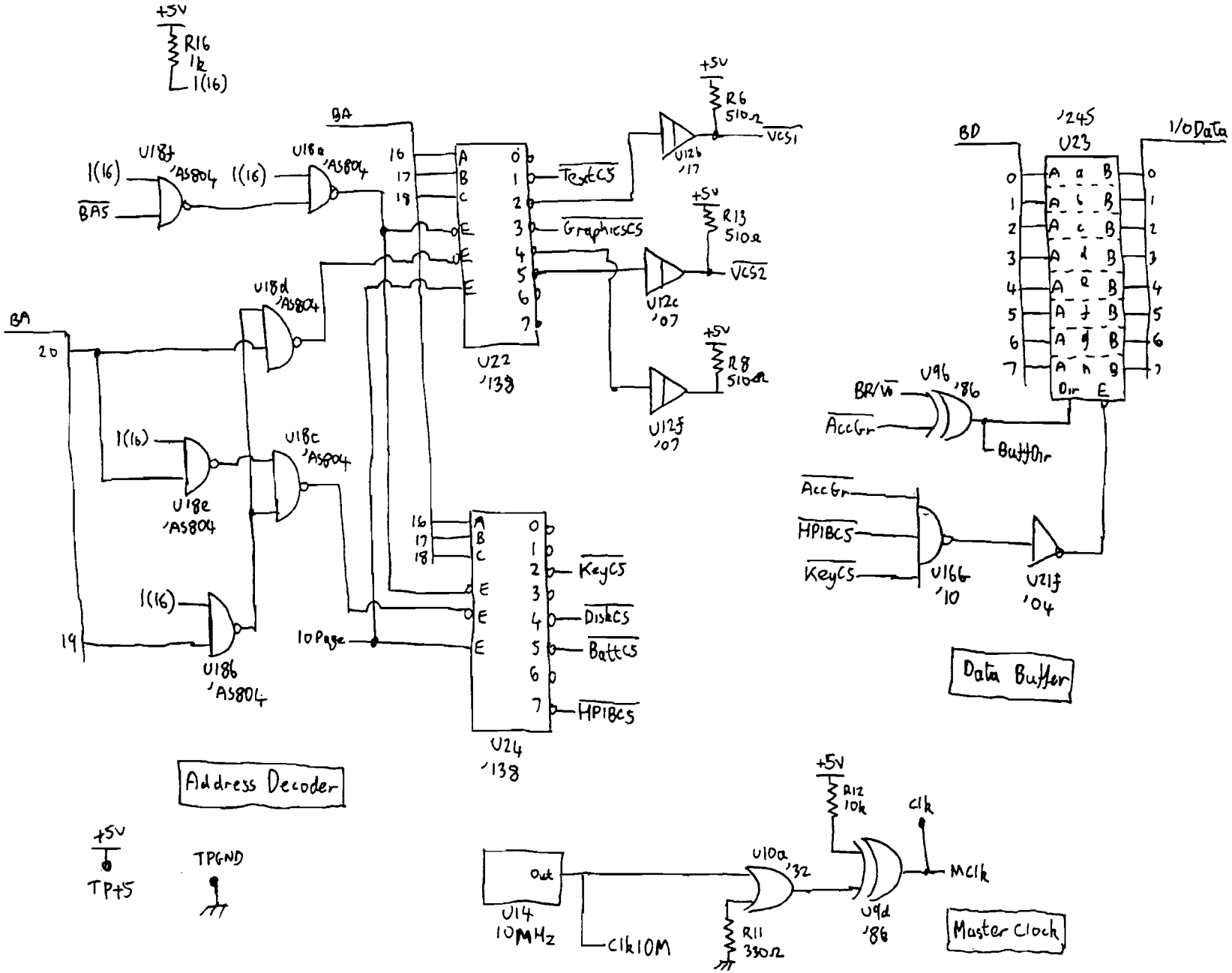

HP9836 Motherboard Sheet (4) 09836-64502

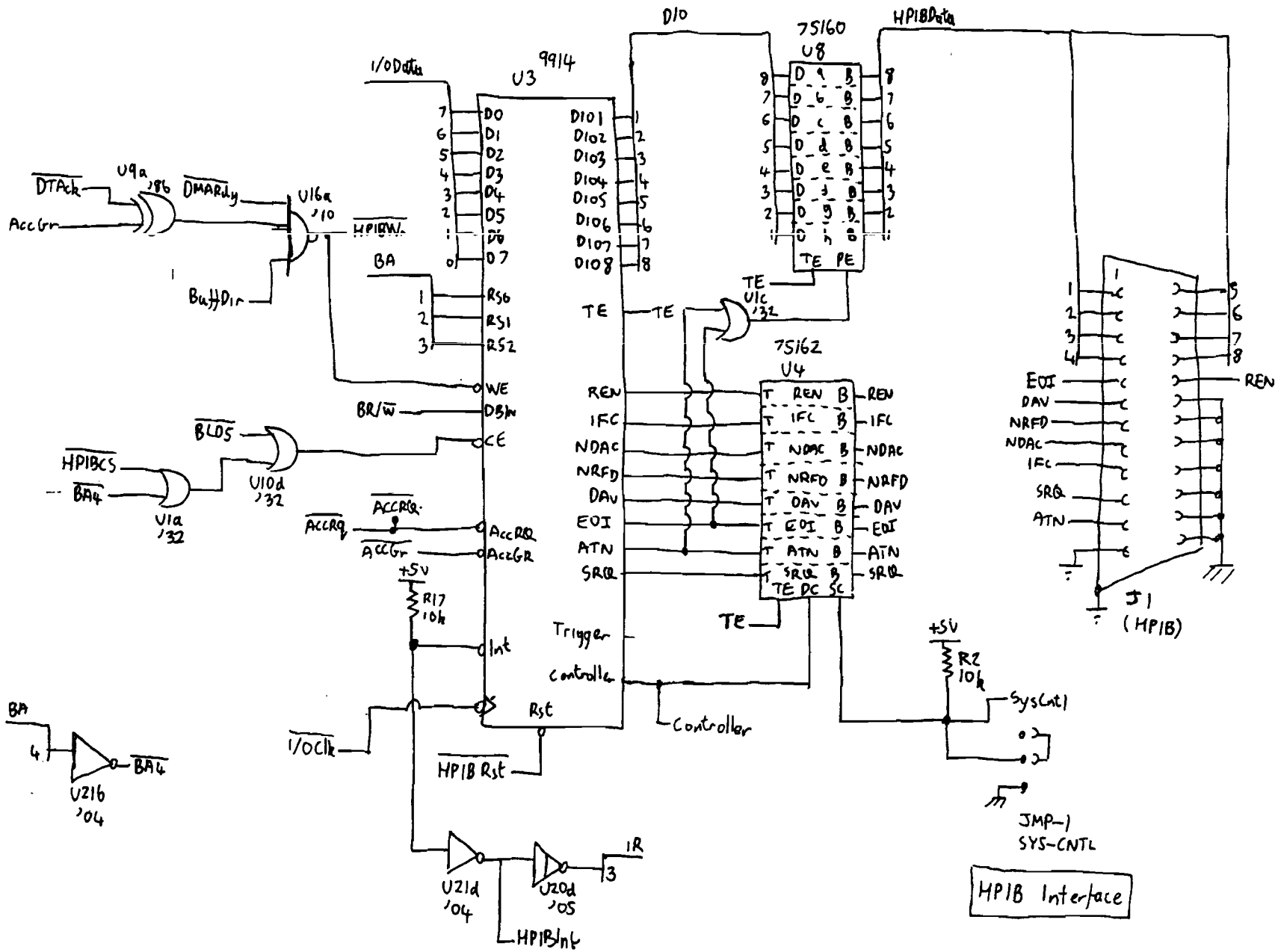

HP9836 Motherboard Sheet (5) 09836-69502

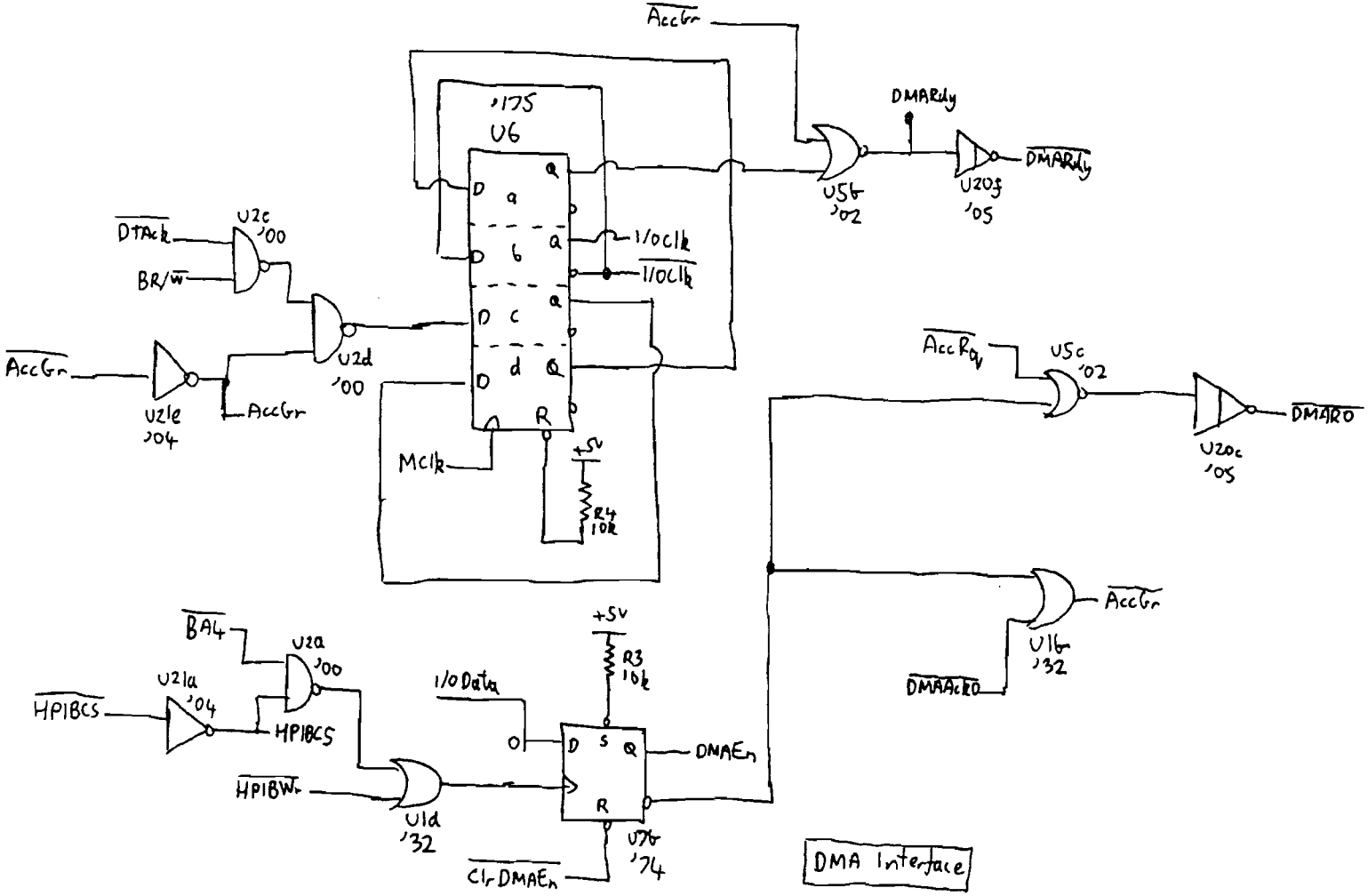

HP9836 Motherboard Sheet 6 09836-69502

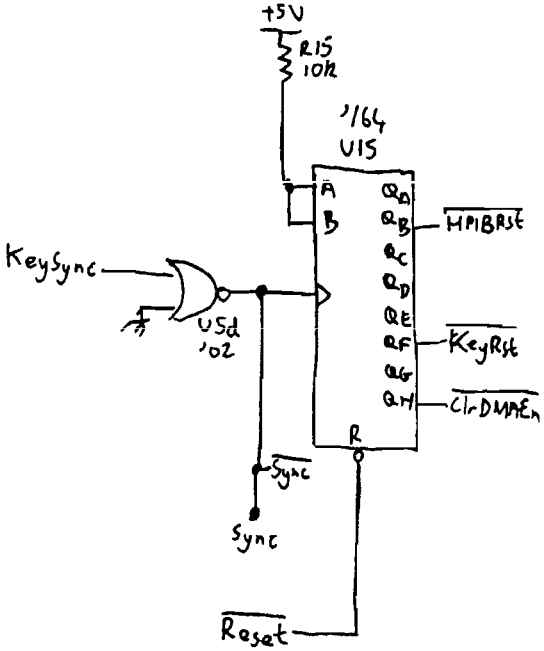

Reset

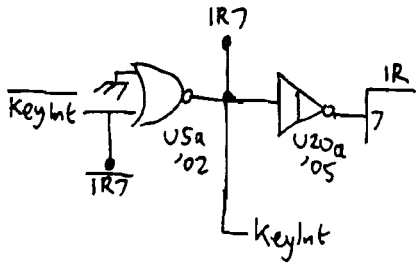

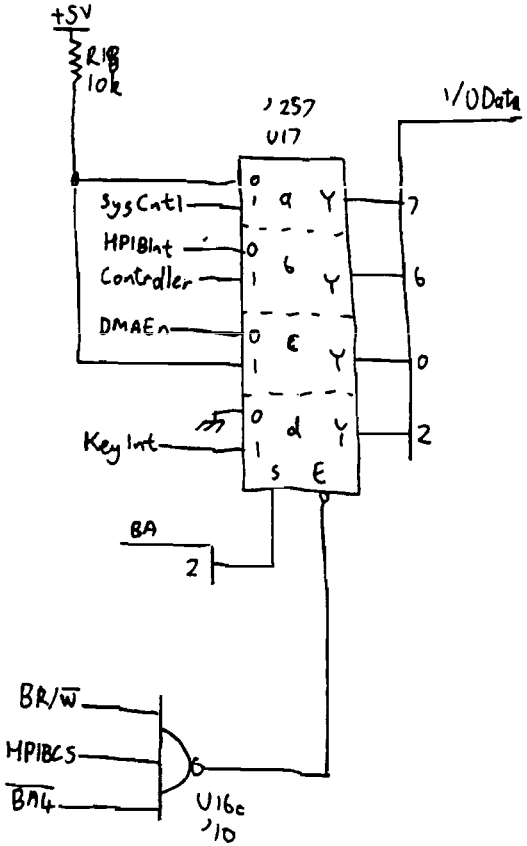

Status Port

HP9836 Motherboard Sheet 7 09836-69502

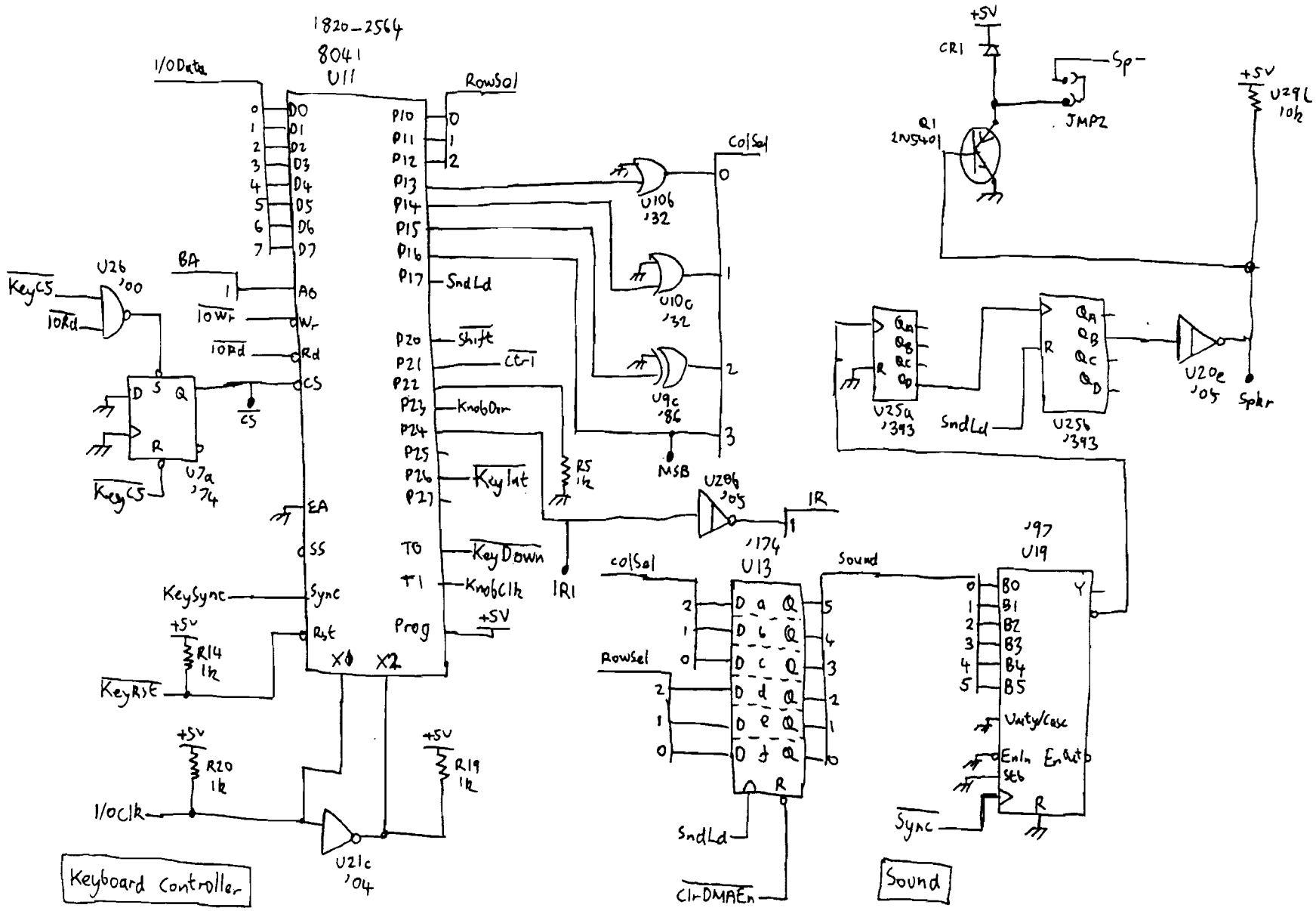

HP 9836 Motherboard Sheet 8 09836-69502

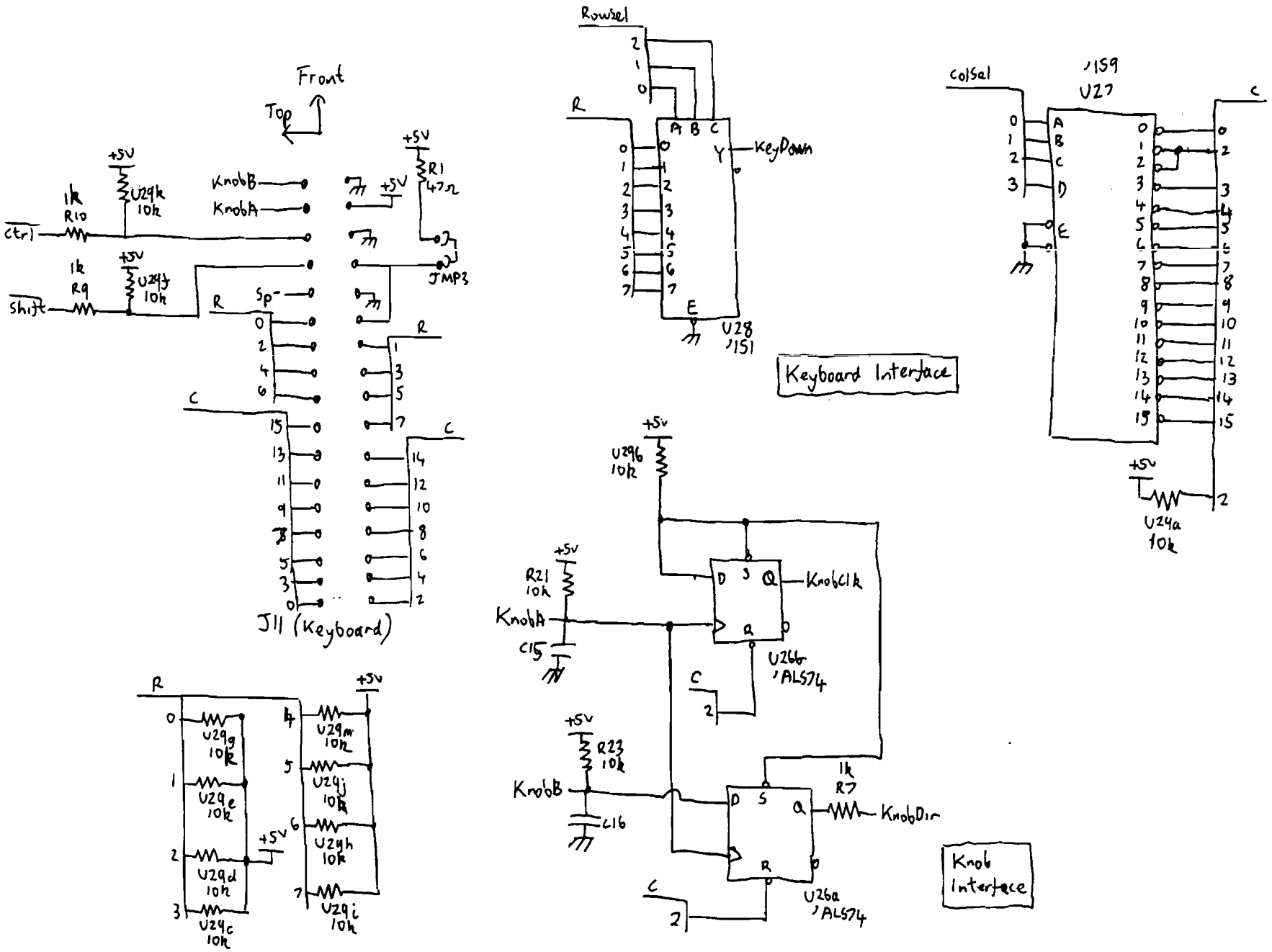

HP9836 Motherboard Sheet 9 09836-69502

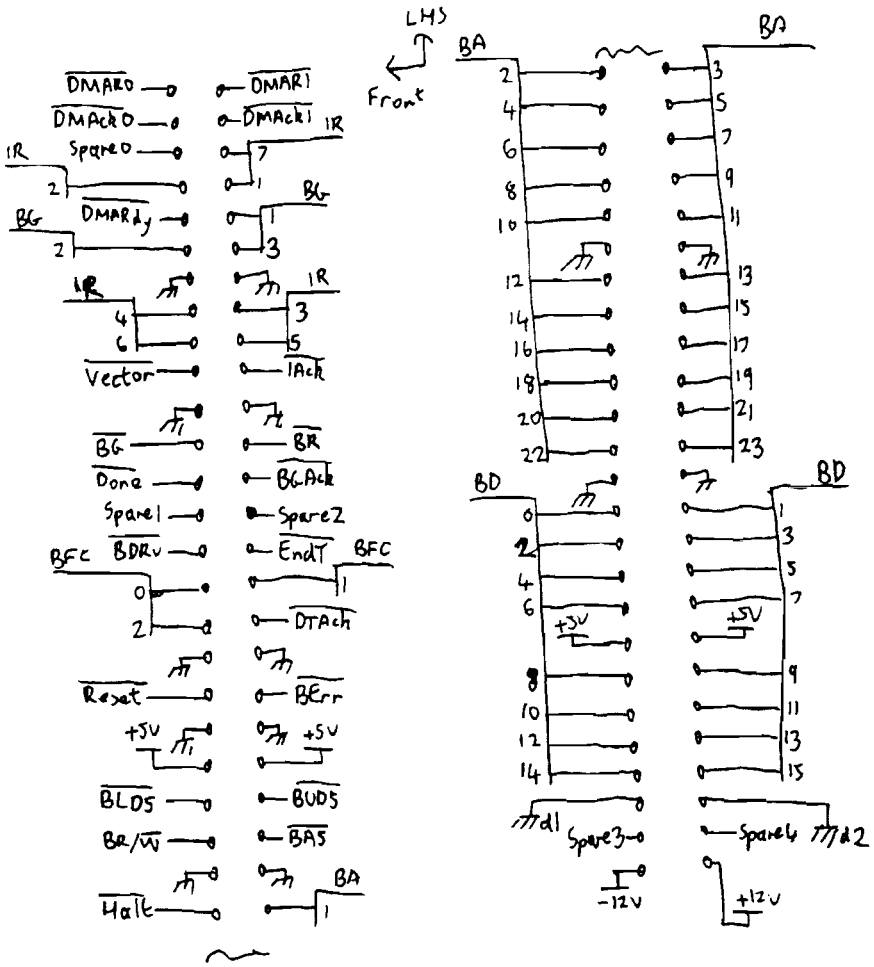

(Motherboard)

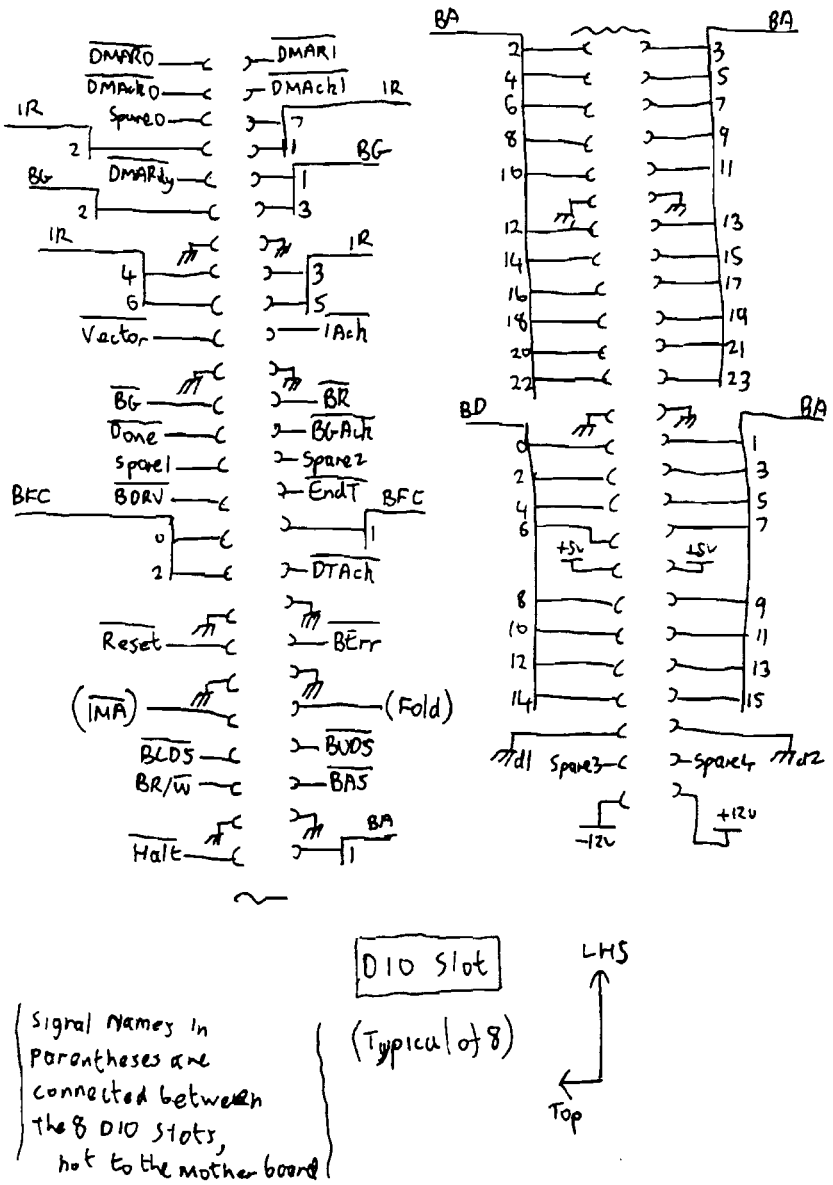

Signal Names in Parentheses are connected between the 8 DIO Slots, not to the mother board

HP9826 / HP9836 Backplane

09826-66581

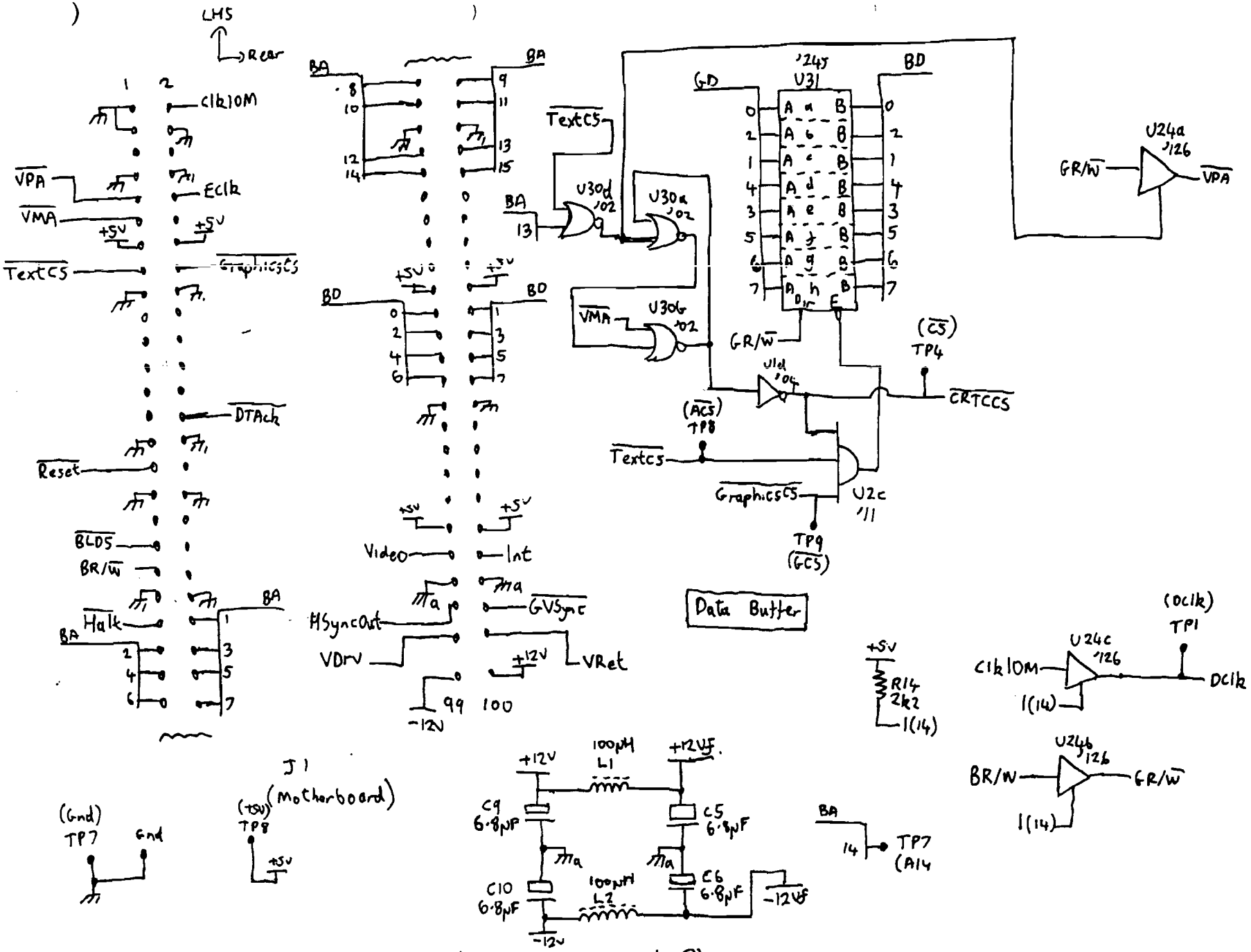

HP9826 Text Video PCB Sheet ① 09826-66573

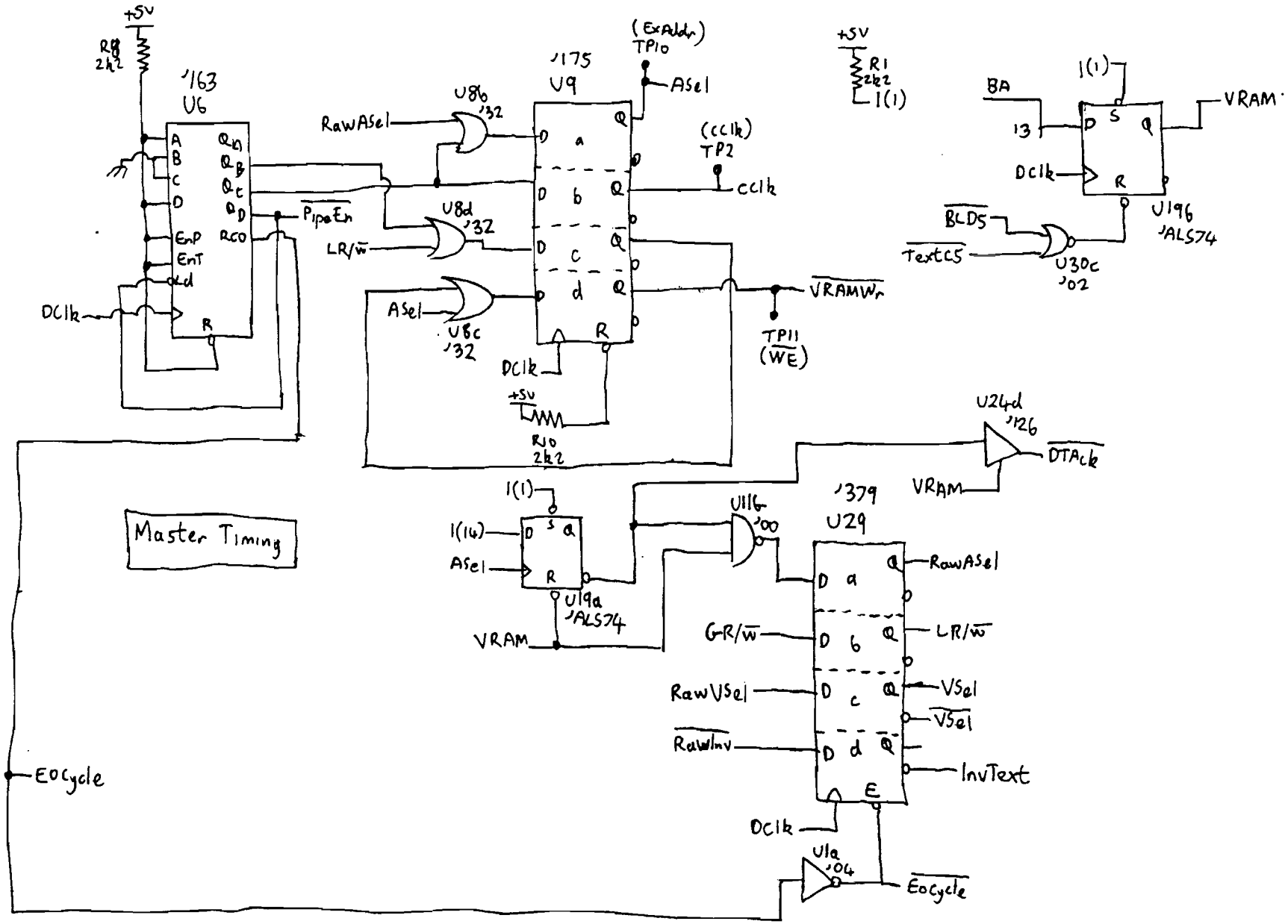

HP9827C Text Video PCB Sheet (7) 09826-66572

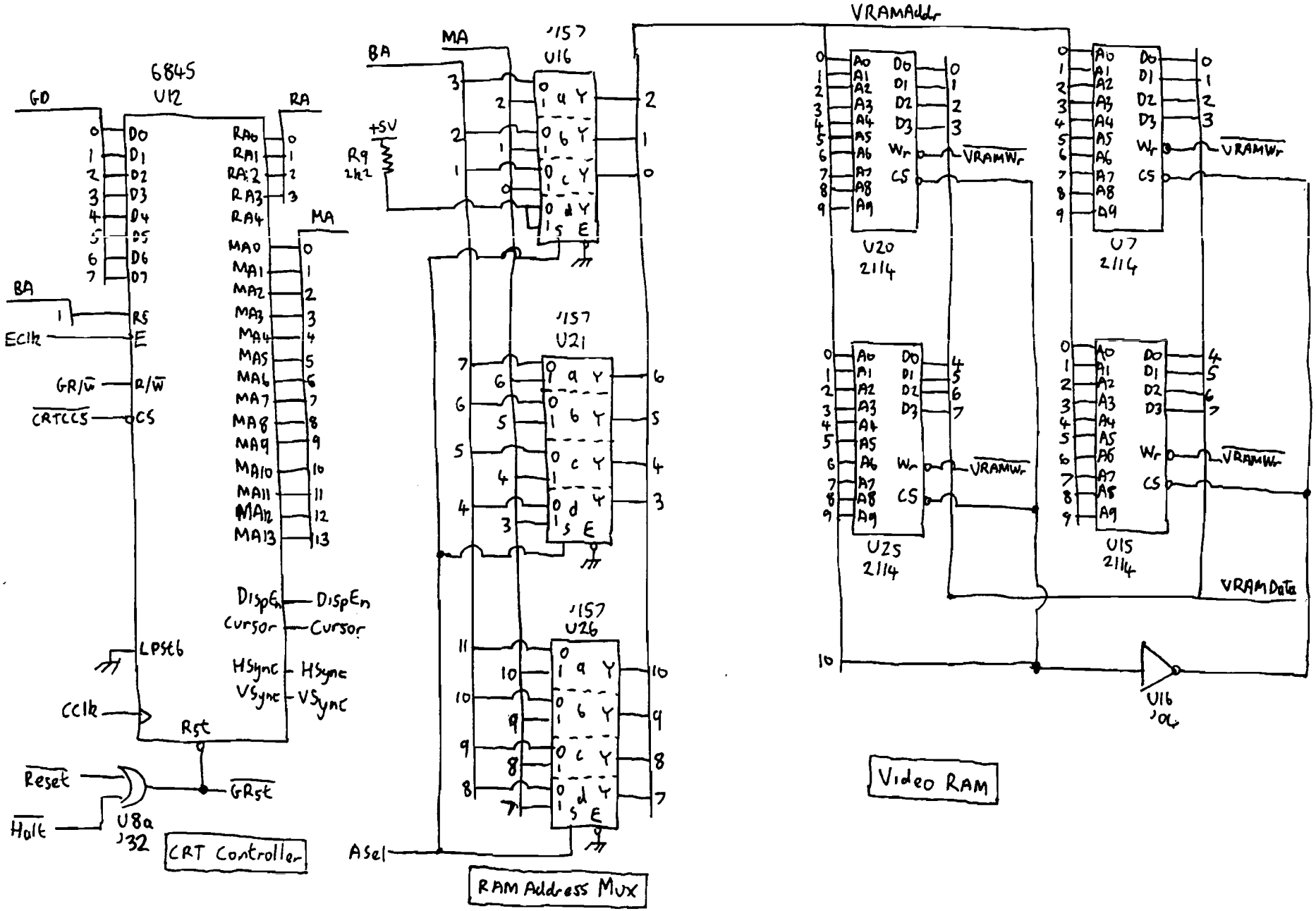

HP9826 Text Video PCB Sheet (3) 09826-66573

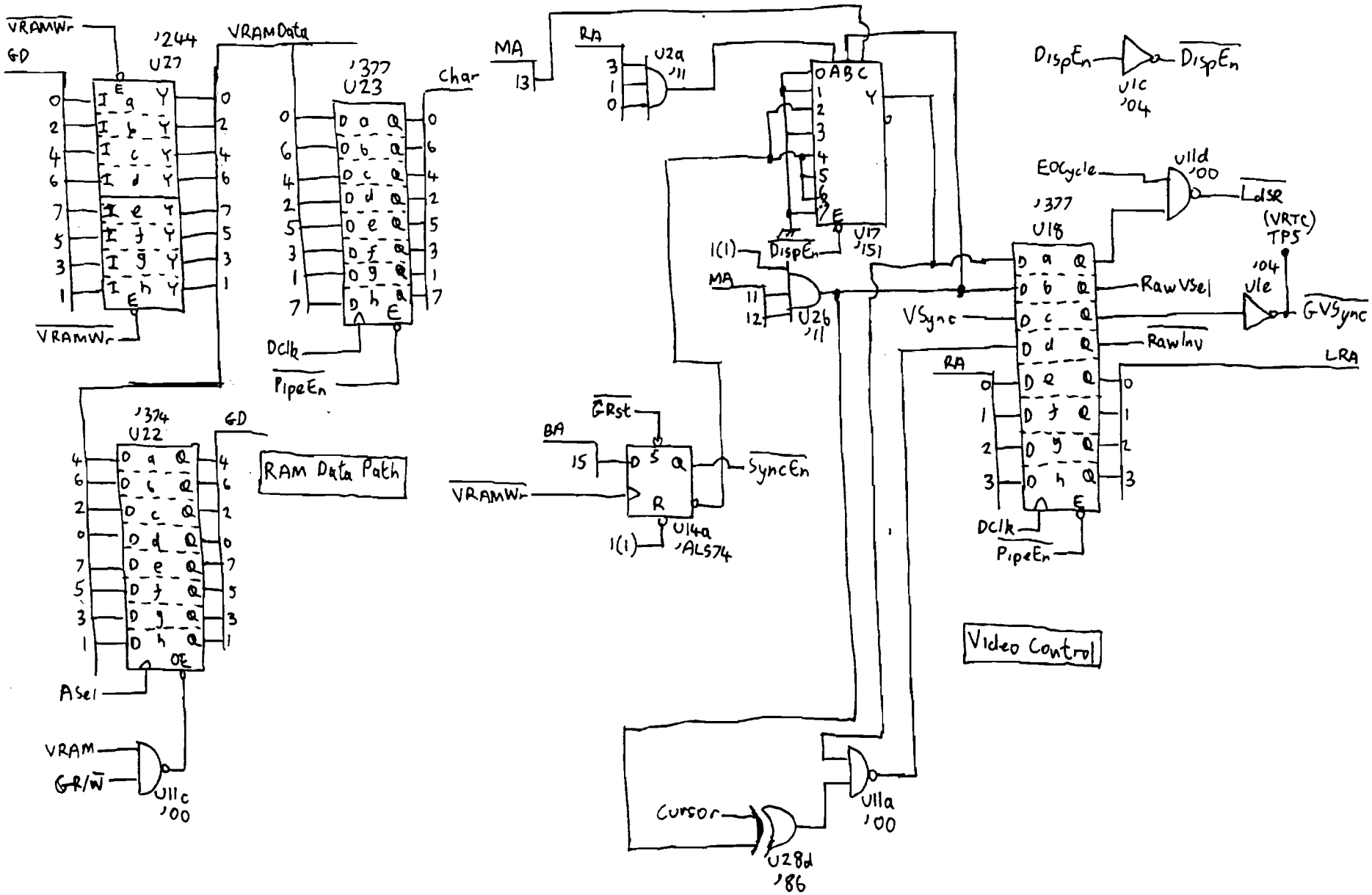

UP0826 Tout Video PCB Sheet (4) 09826-66573

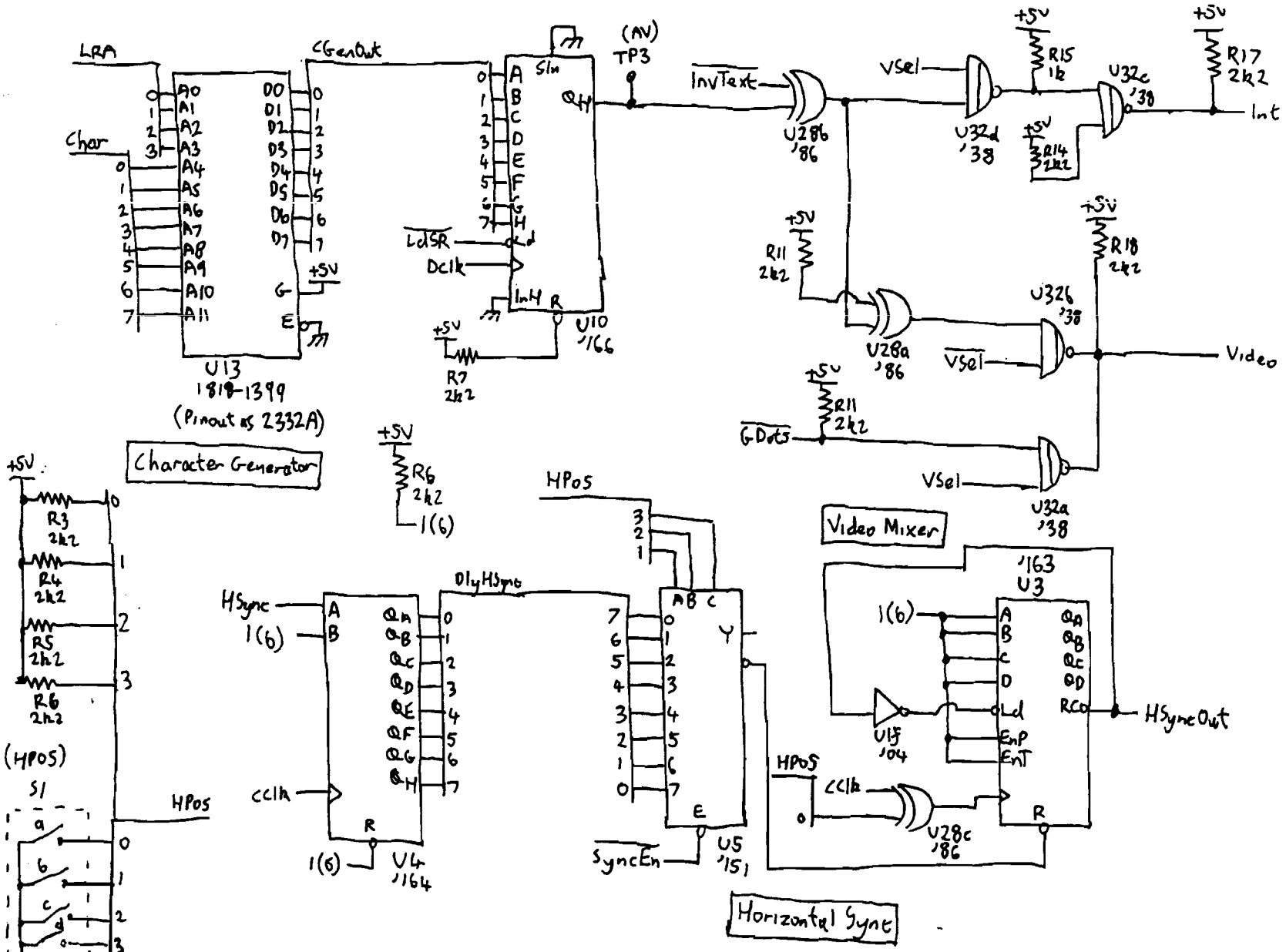

HP9826 Text Video PCB Sheet (5) 09826-66573

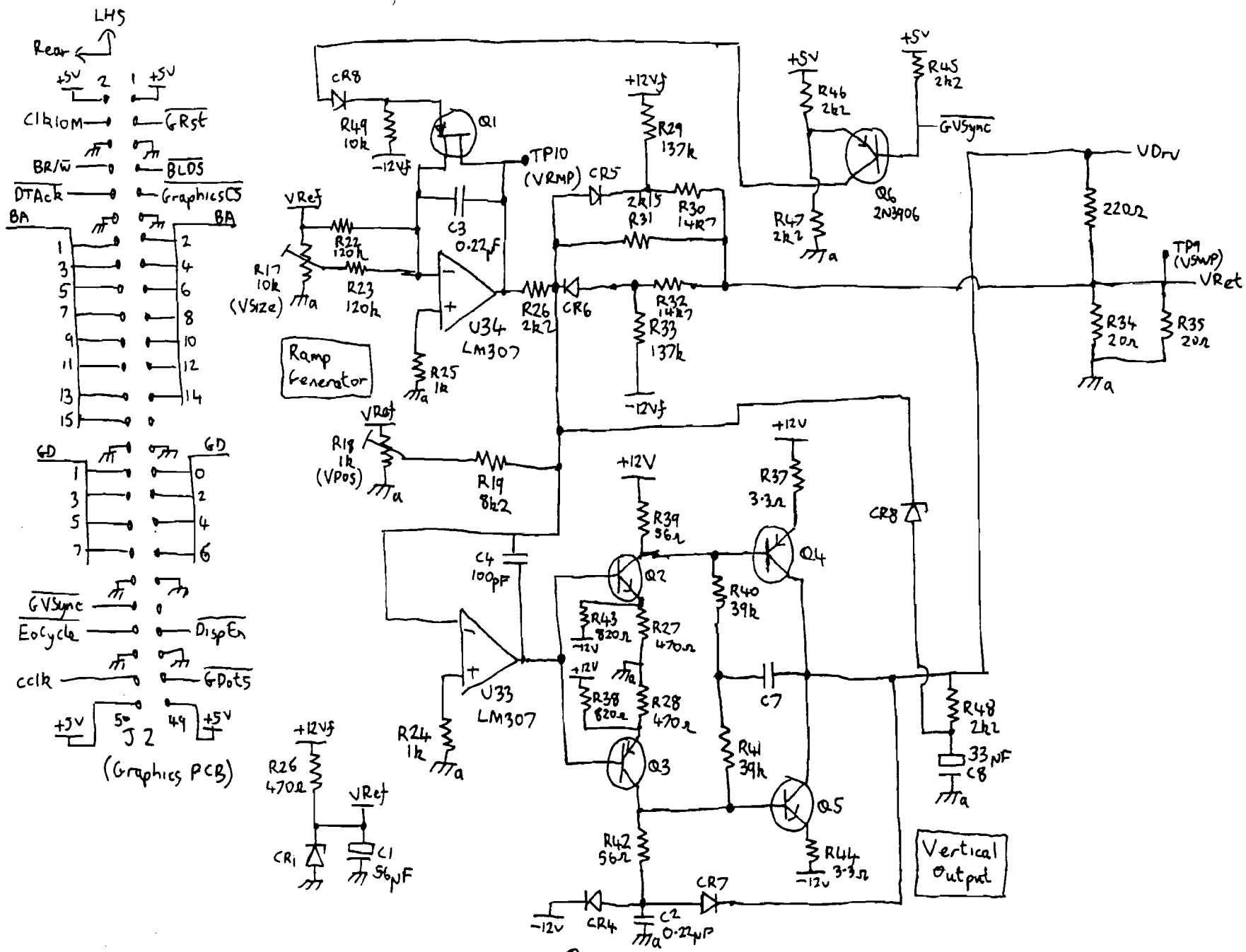

HP9826 Text Video PCB Sheet (6) 09826-66572

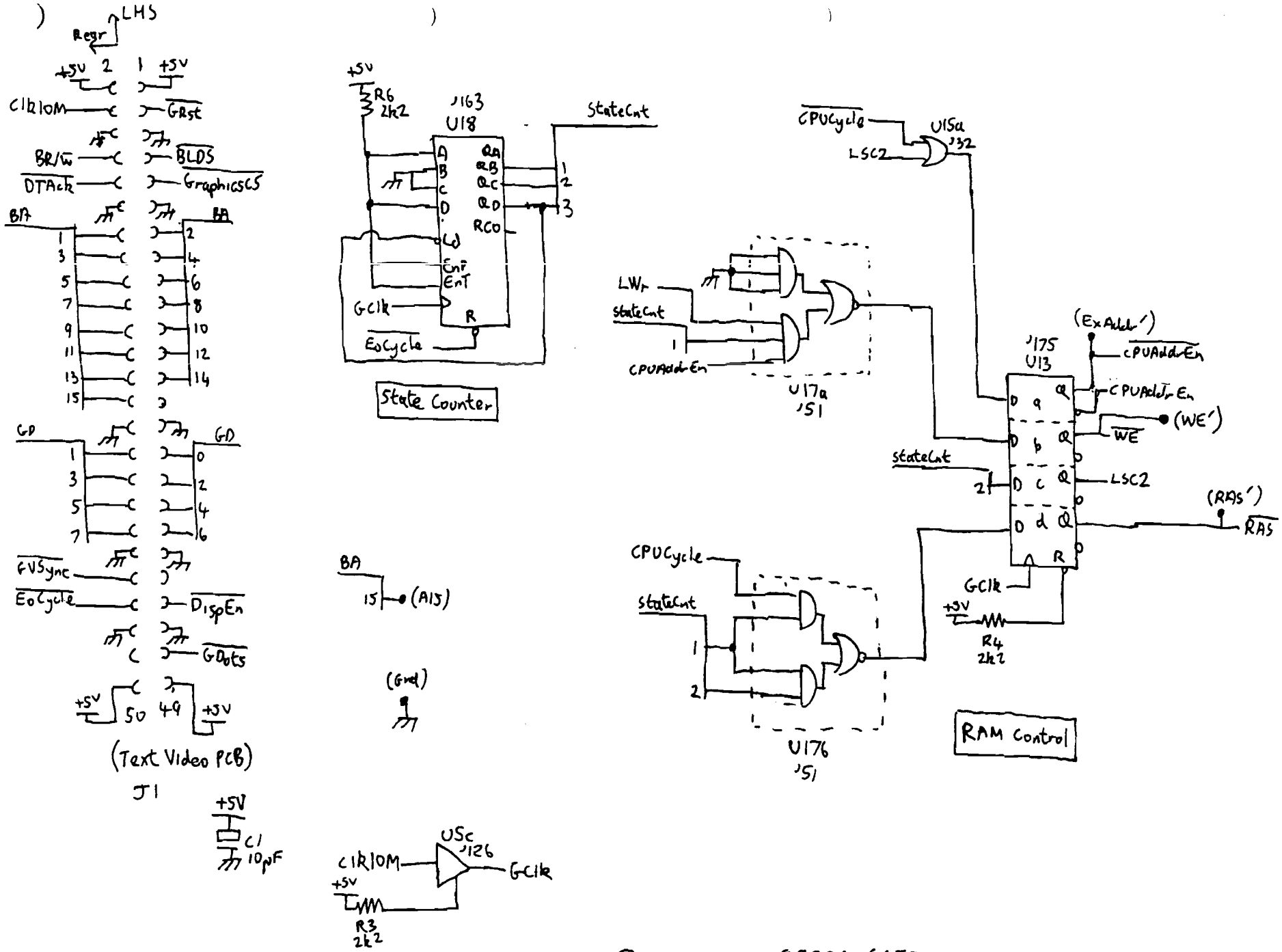

HD9826 Graphics PCB Sheet(1) 09826-66575

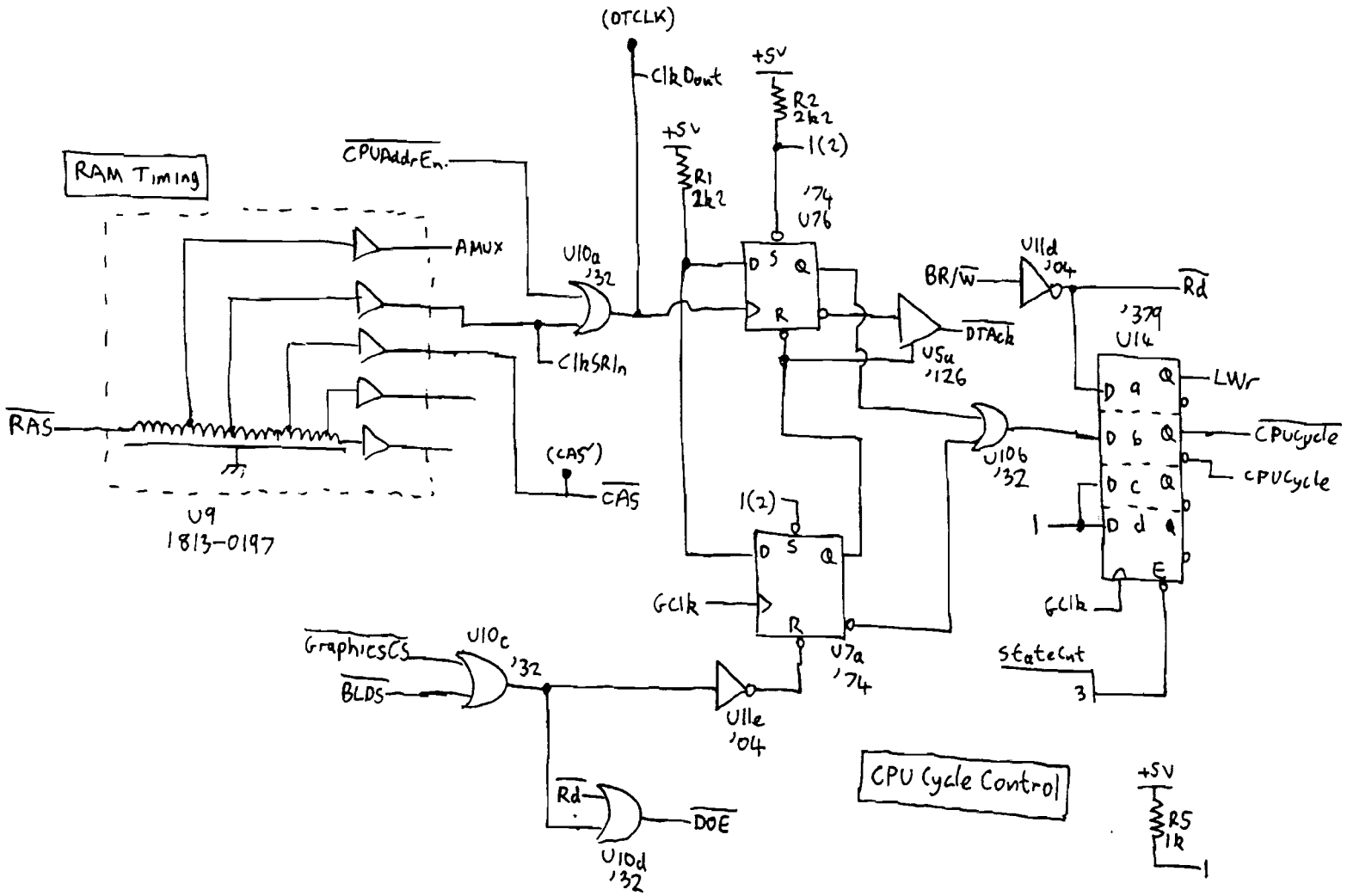

HP9826 Graphics PCB Sheet (2) 09826-66575

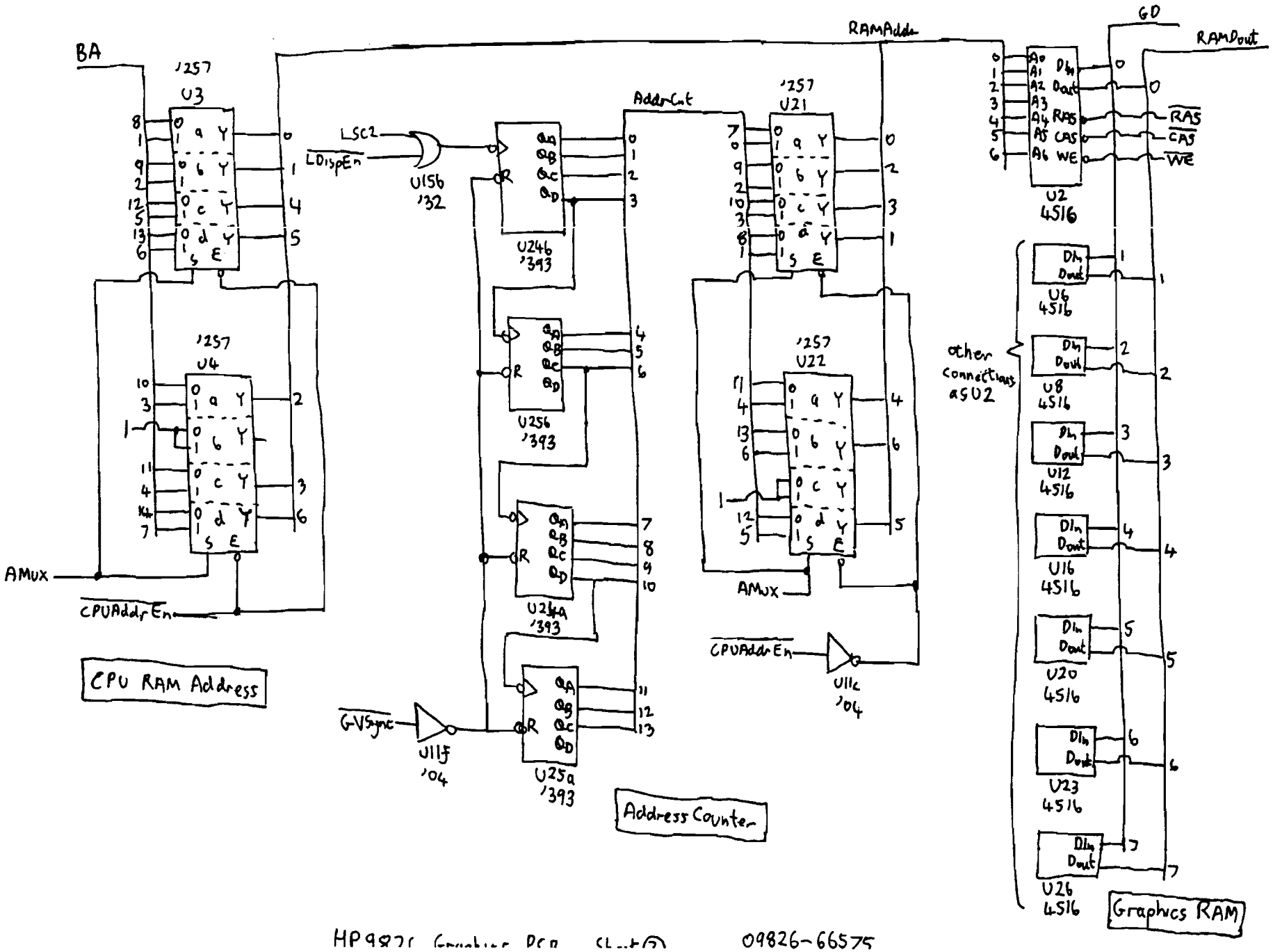
BA
'257
U3
'257
U4
AMux
CPUAddrEn
CPU RAM Address
LSC2
LDispEn
U156
'32
U246
'393
U256
'393
U24a
'393
U25a
'393
GVSync
U11f
'04
AddrCnt
Address Counter
'257
U21
'257
U22
AMux
CPUAddrEn
U11c
'04
RAMAddr
GD
RAMDout
U2
4516
RAS
CAS
WE
other connections as U2
U6
4516
U8
4516
U12
4516
U16
4516
U20
4516
U23
4516
U26
4516
Graphics RAM

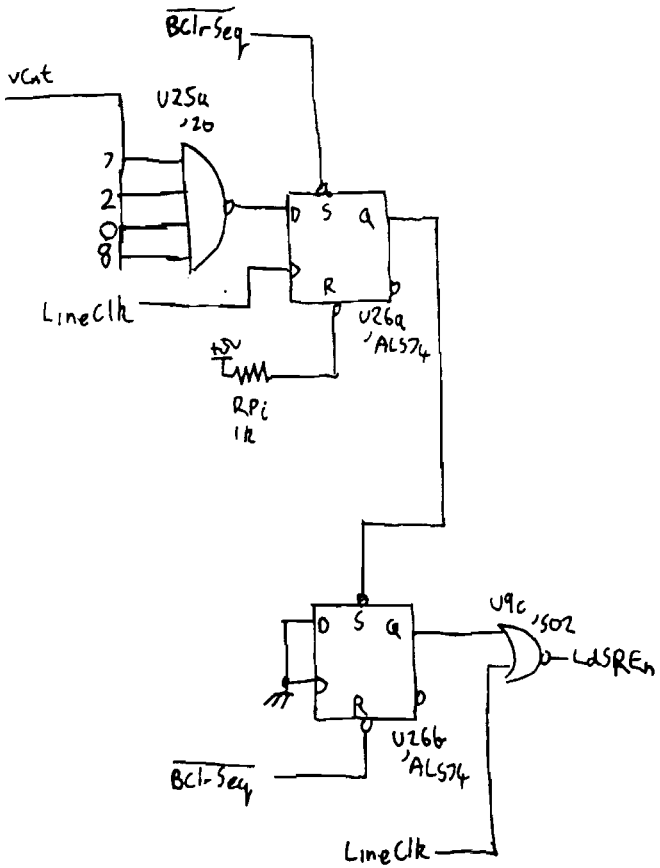

End of Picture

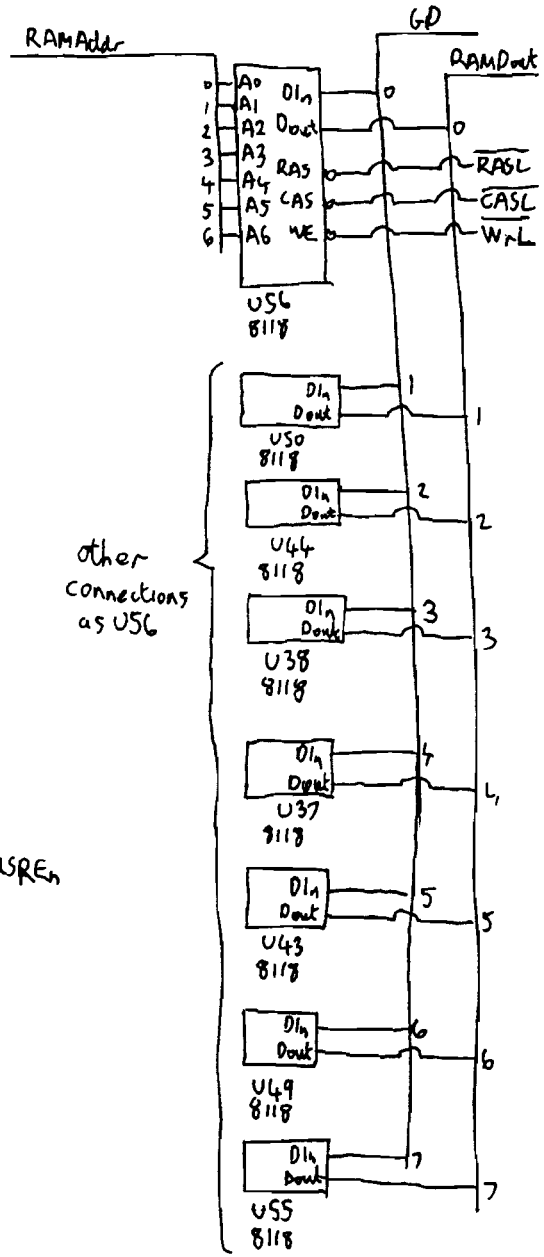

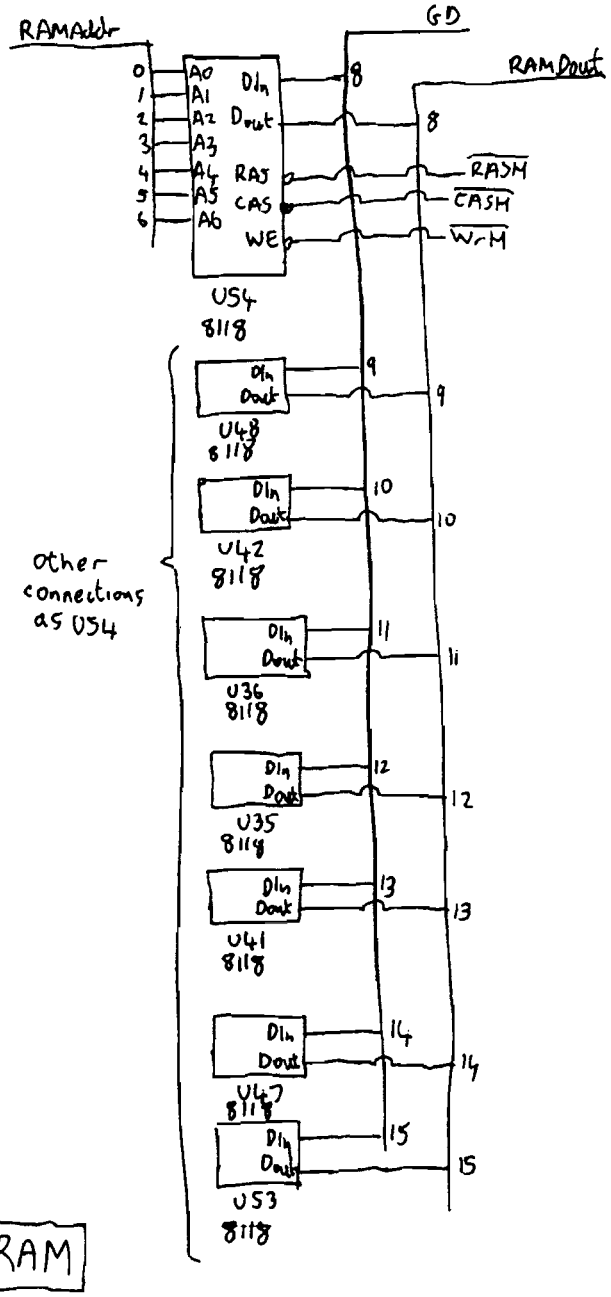

RAM

HP9836 Graphics PCB Sheet 6 09826-66577

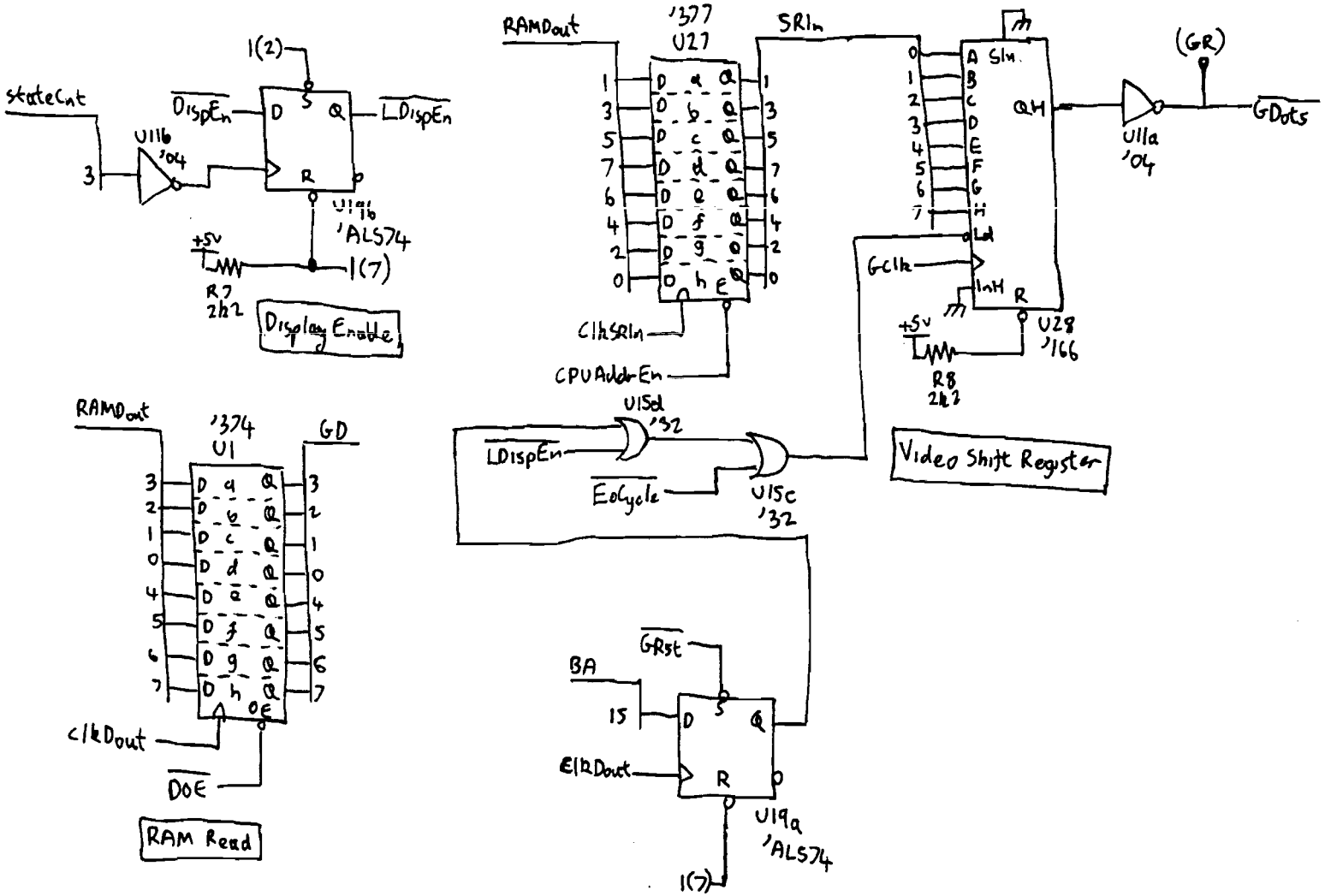
stateCnt
3
U11b
'04
DispEn
1(2)
D
S
Q
LDispEn
R
U19b
'ALS74
+5v
R7
2k2
1(7)
Display Enable
RAMDout
'377
U27
SRIn
ClkSRIn
CPUAddrEn
U15d
'32
LDispEn
EoCycle
U15c
'32
A Sln
QH
Ld
GClk
InH
R
U28
'166
+5v
R8
2k2
Video Shift Register
(GR)
U11a
'04
GDots
RAMDout
'374
U1
GD
ClkDout
DOE
RAM Read
BA
GRst
15
ElkDout
U19a
'ALS74
1(7)

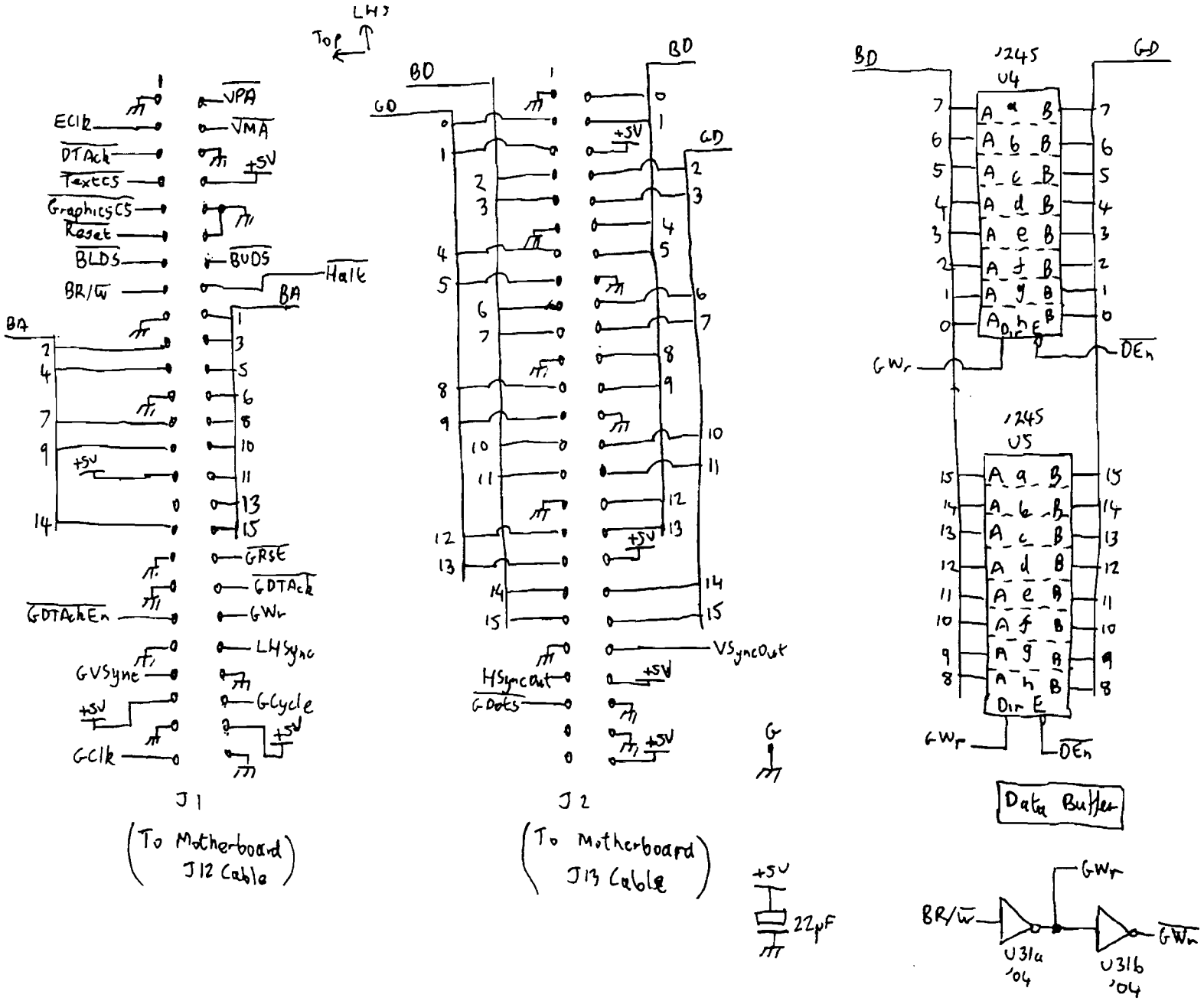

HP9836 Text Video PCB Sheet ①

09826-66576

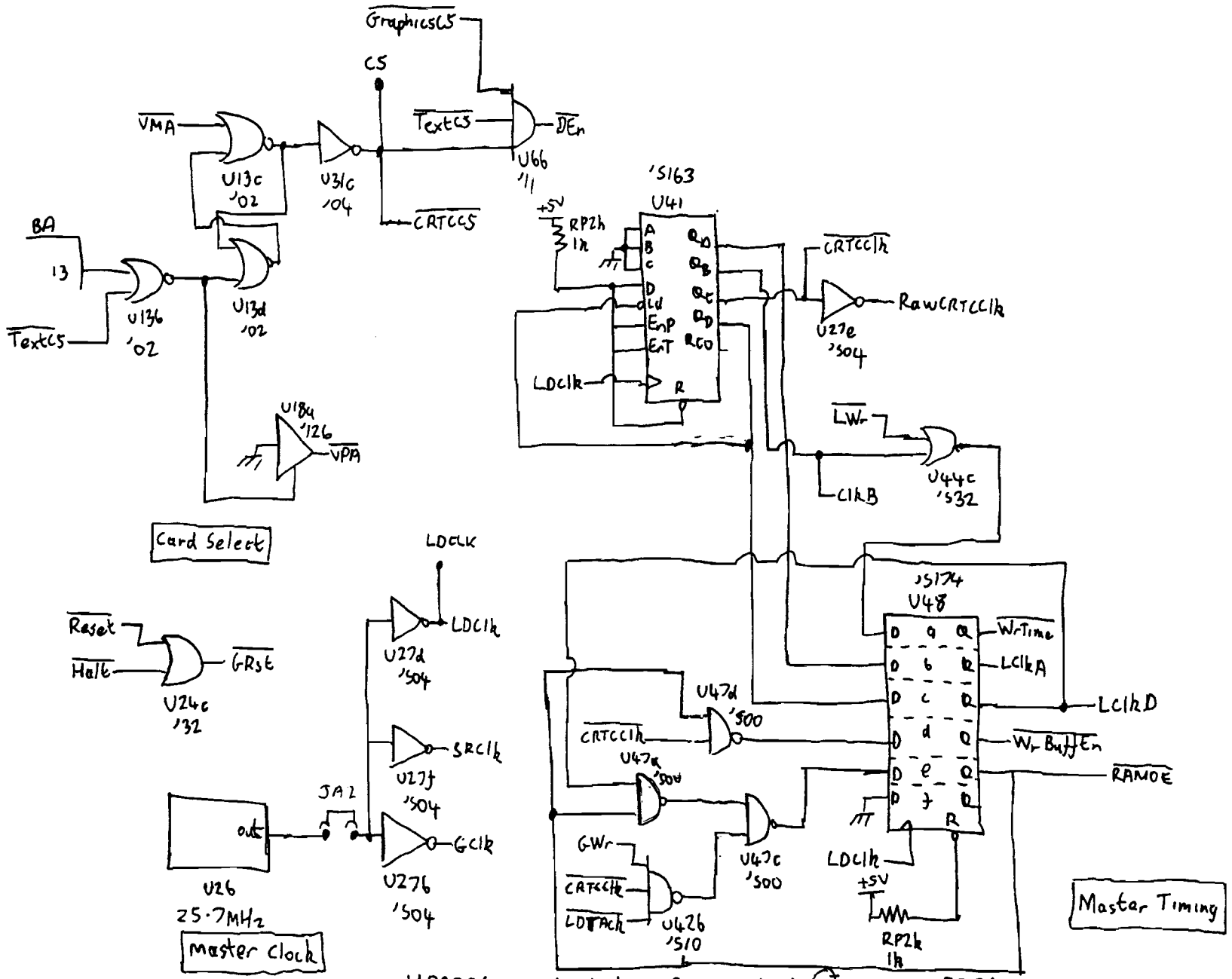

HP9836 Text Video PCB Sheet (2) 09826-66576

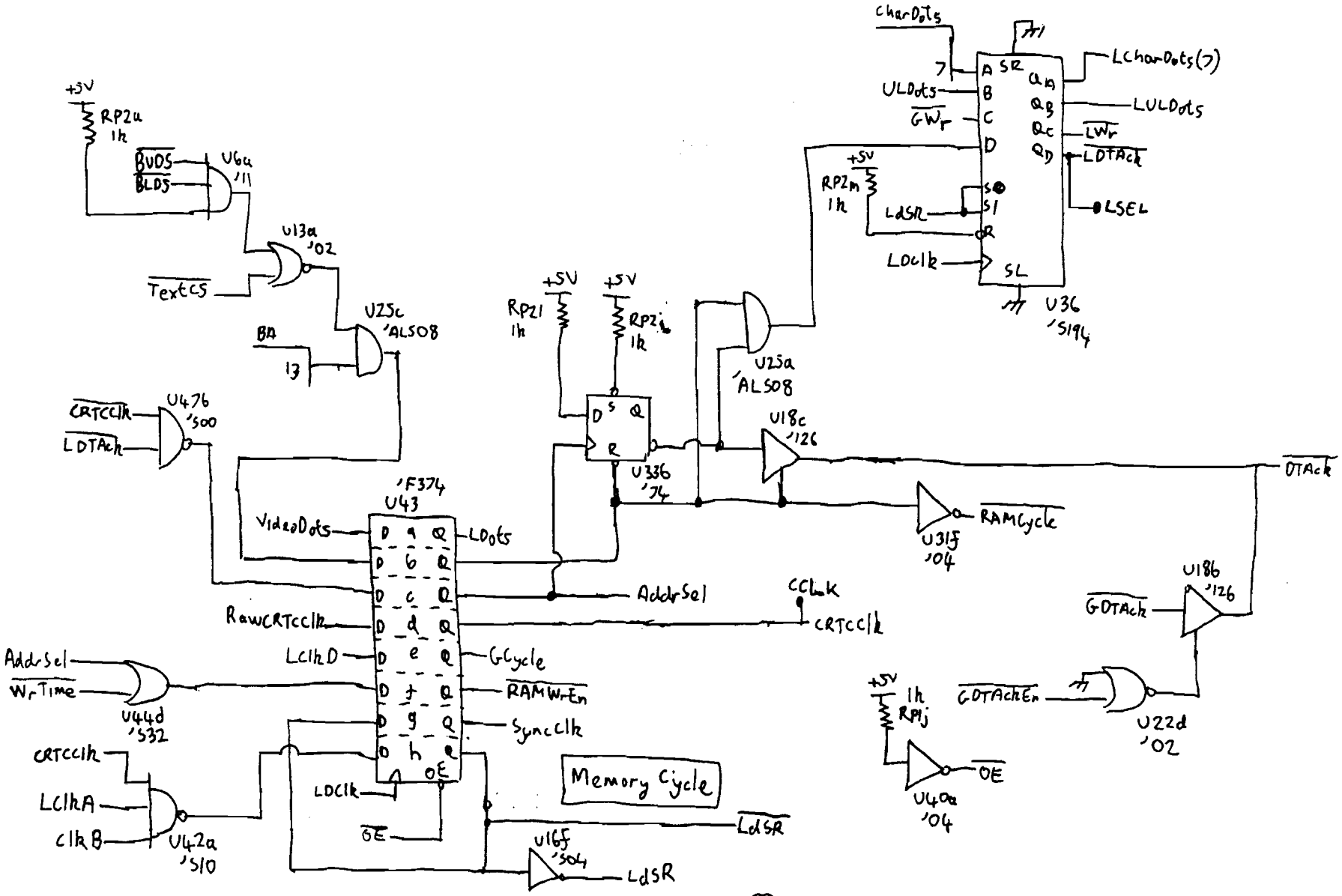

HP9836 Text Video PCB Sheet (3) 09826-66576

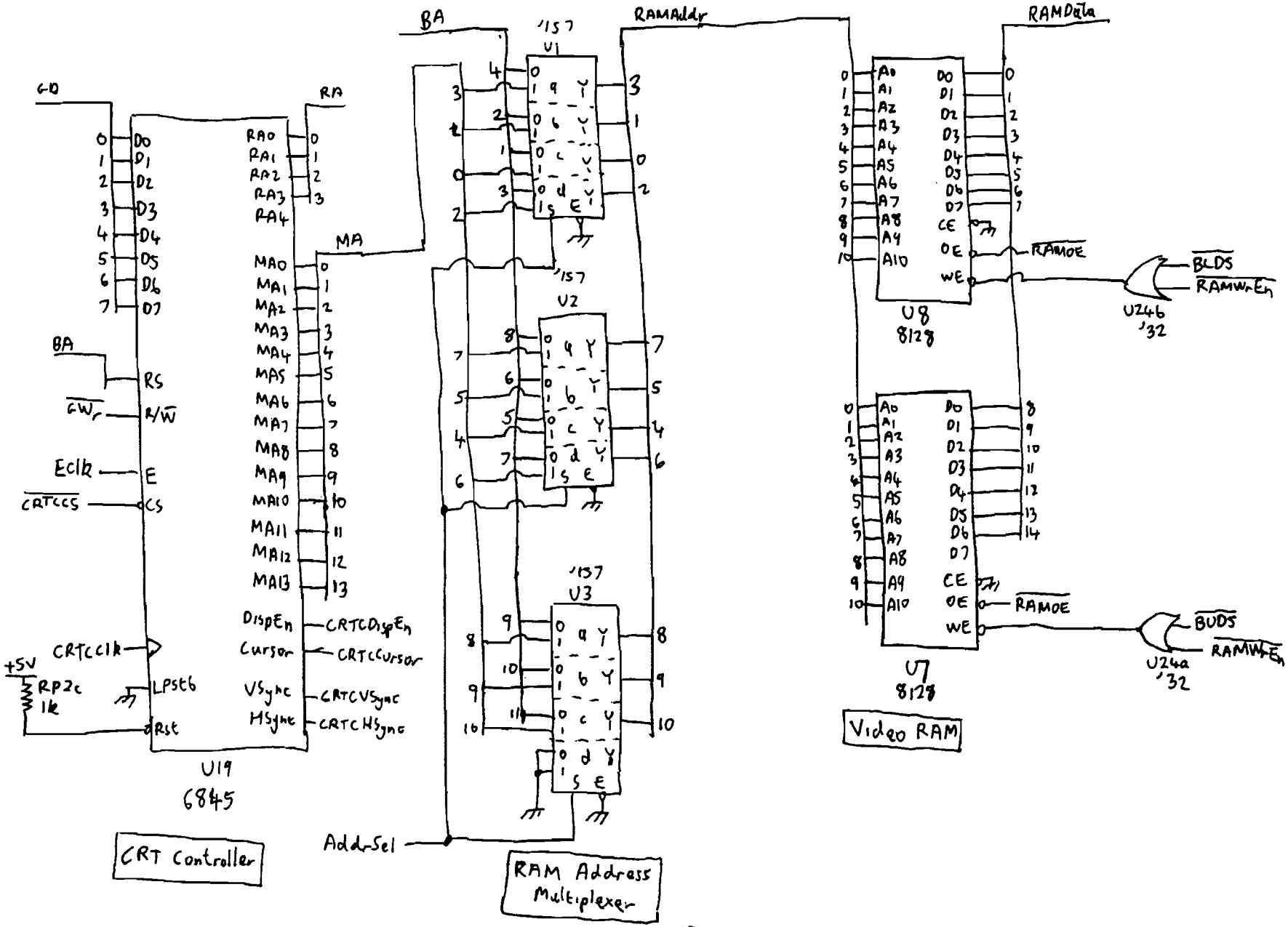

HP9836 Text Video PCB Sheet (4) 09826-66576

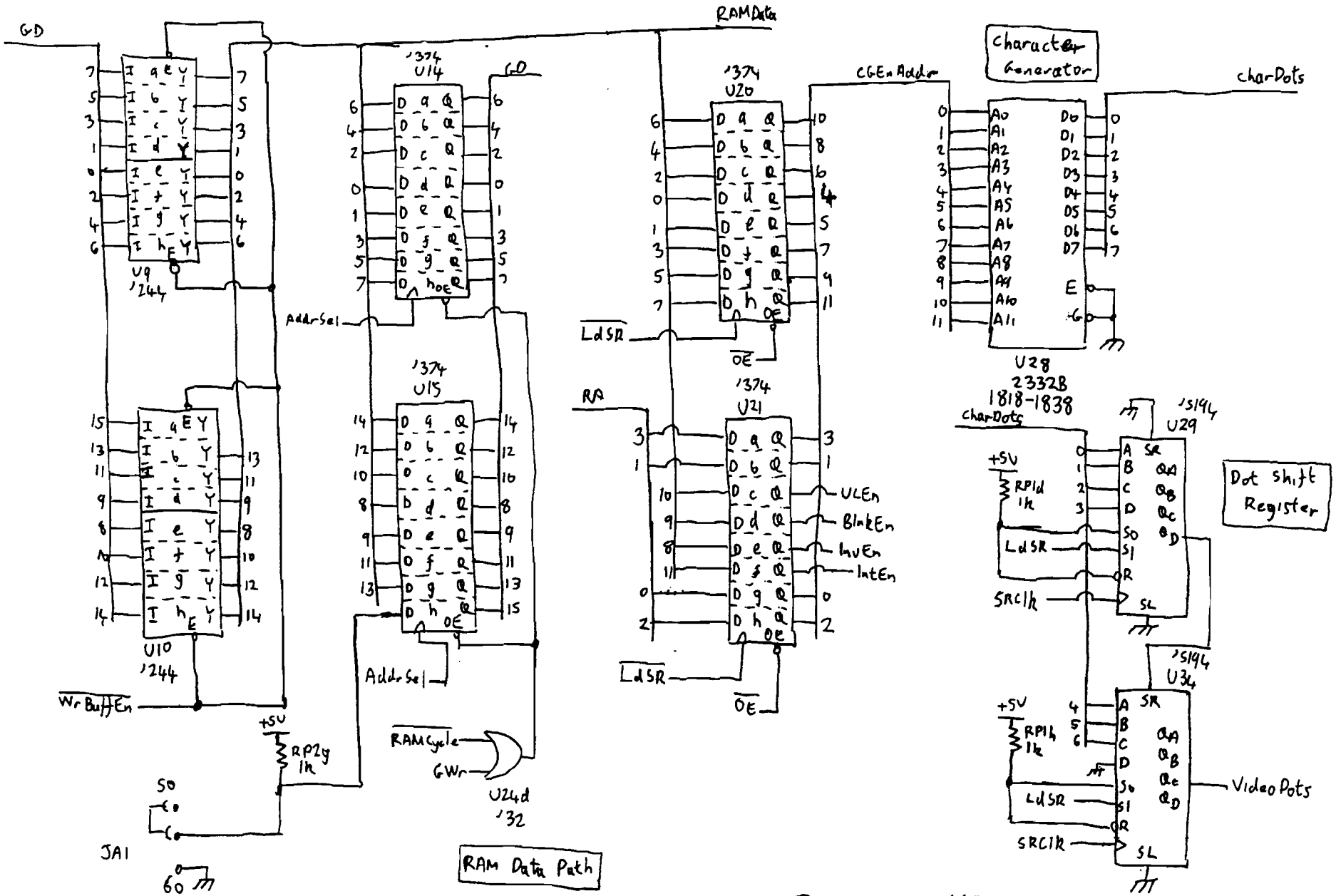

HP9836 Text Video PCB Sheet 5 09826-66576

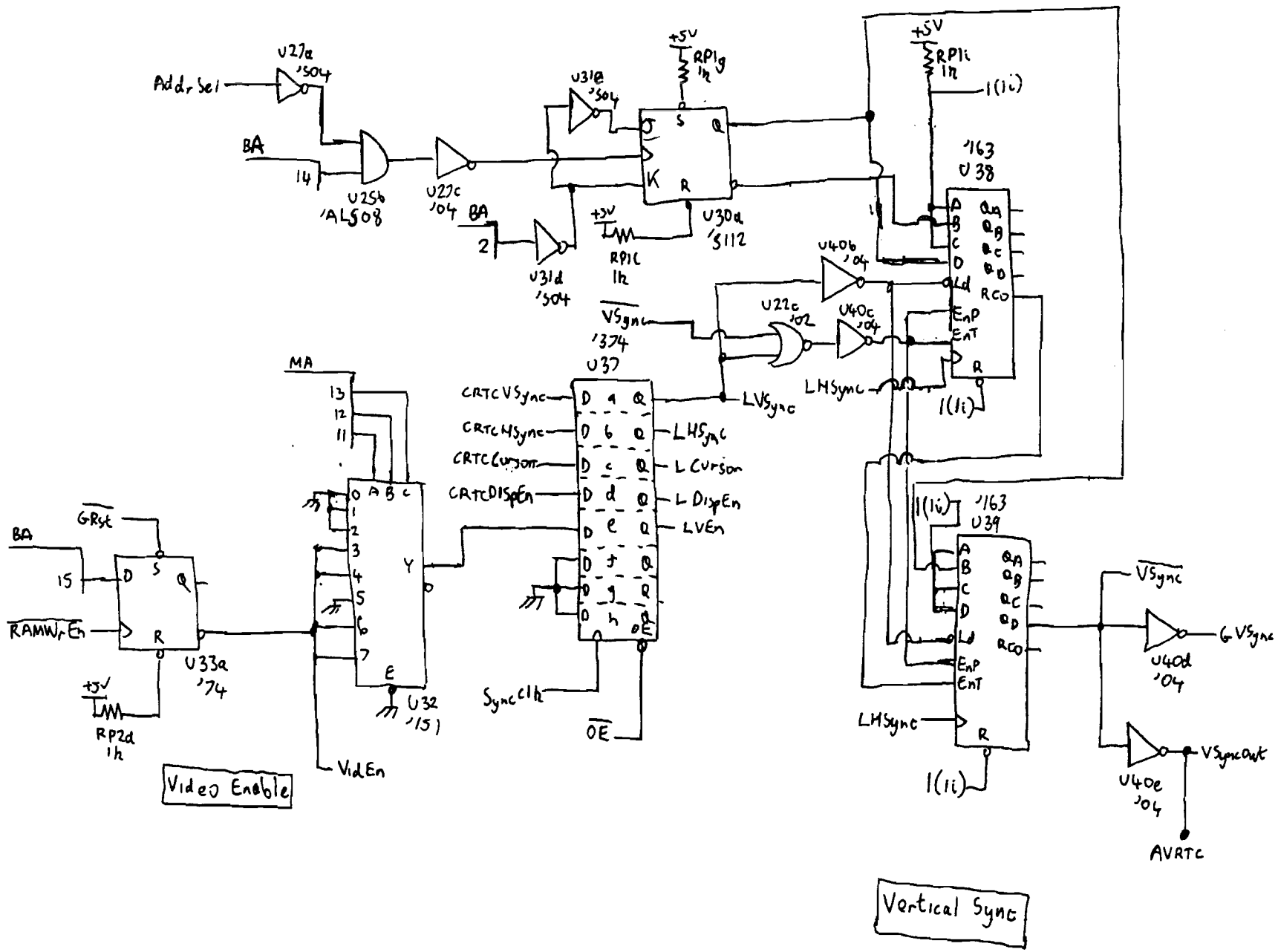

HP9836 Text Video PCB Sheet (6) 09826-66576

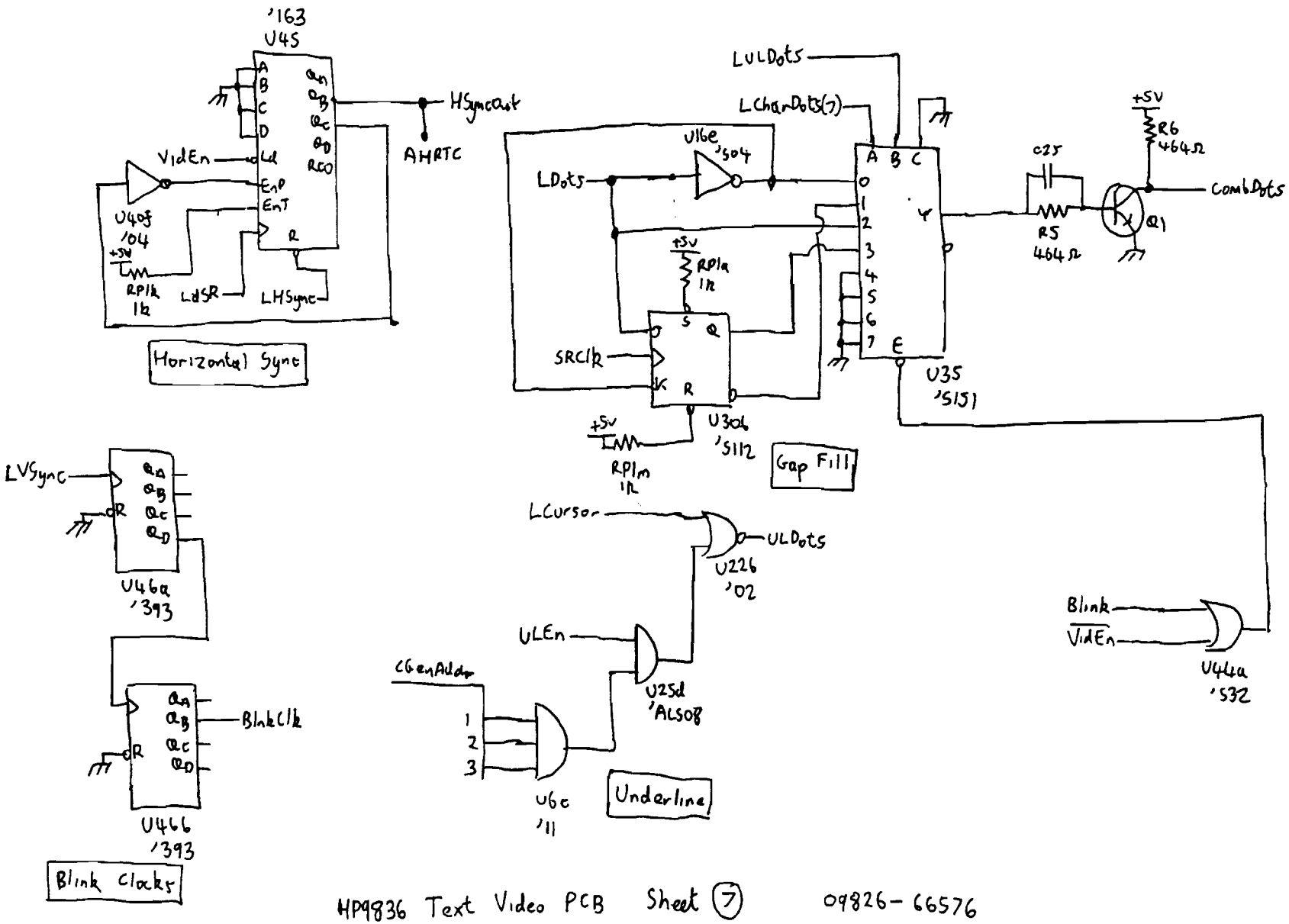

HP9836 Text Video PCB Sheet 7 09826-66576

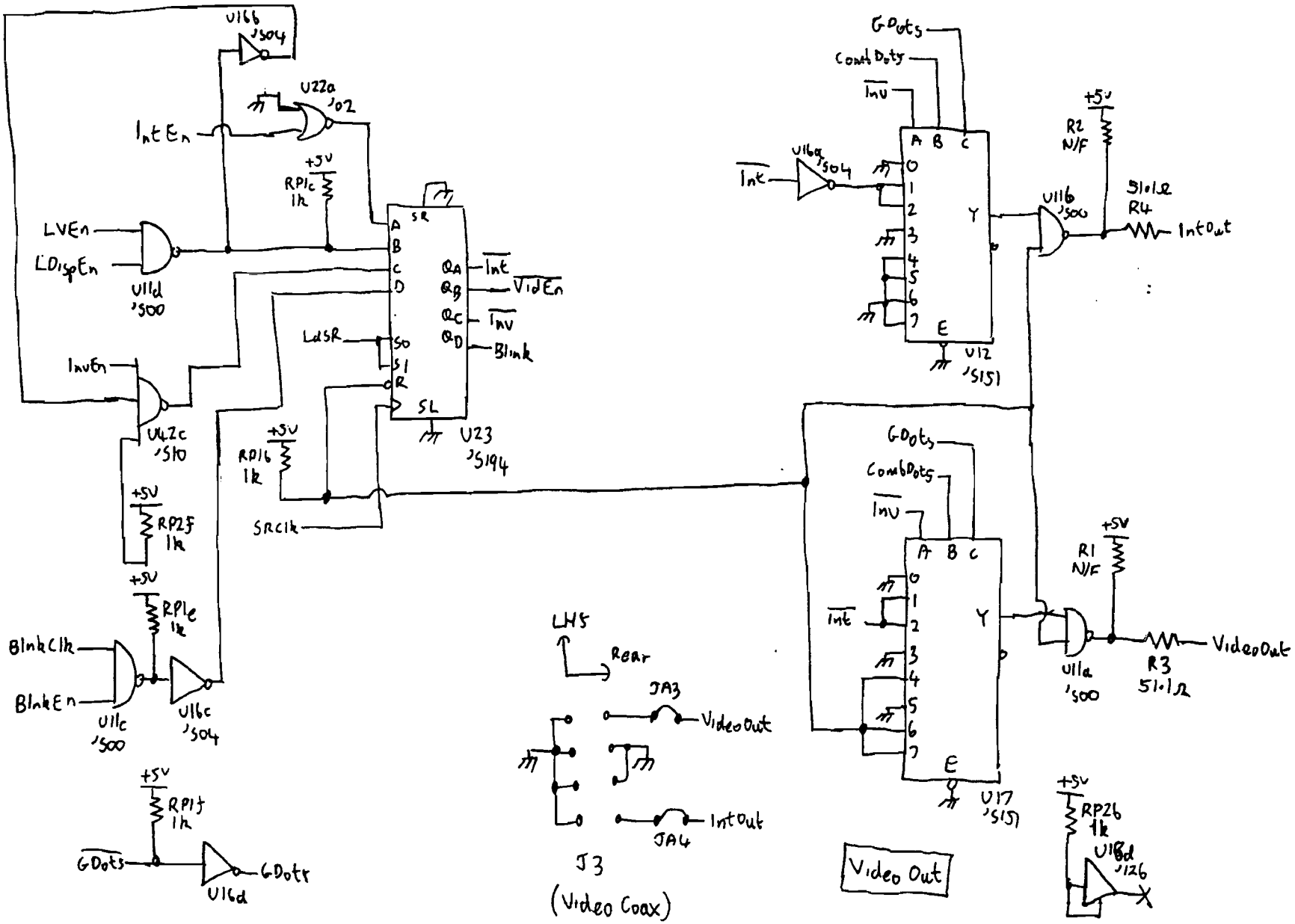

HP9836 Text Video PCB Sheet 8 09826-66576

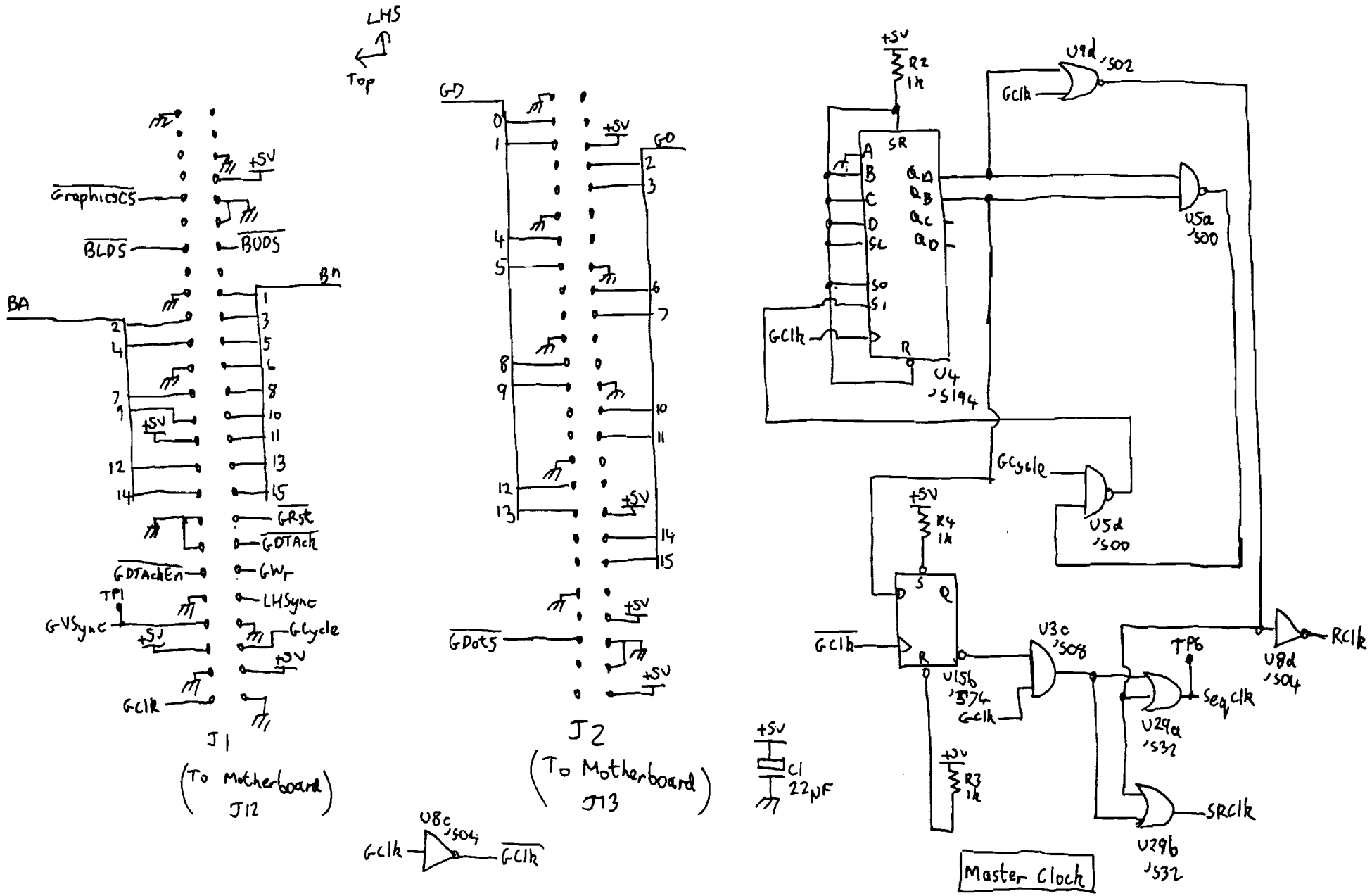

HP9836 Graphics PCB Sheet 1 09826-66577

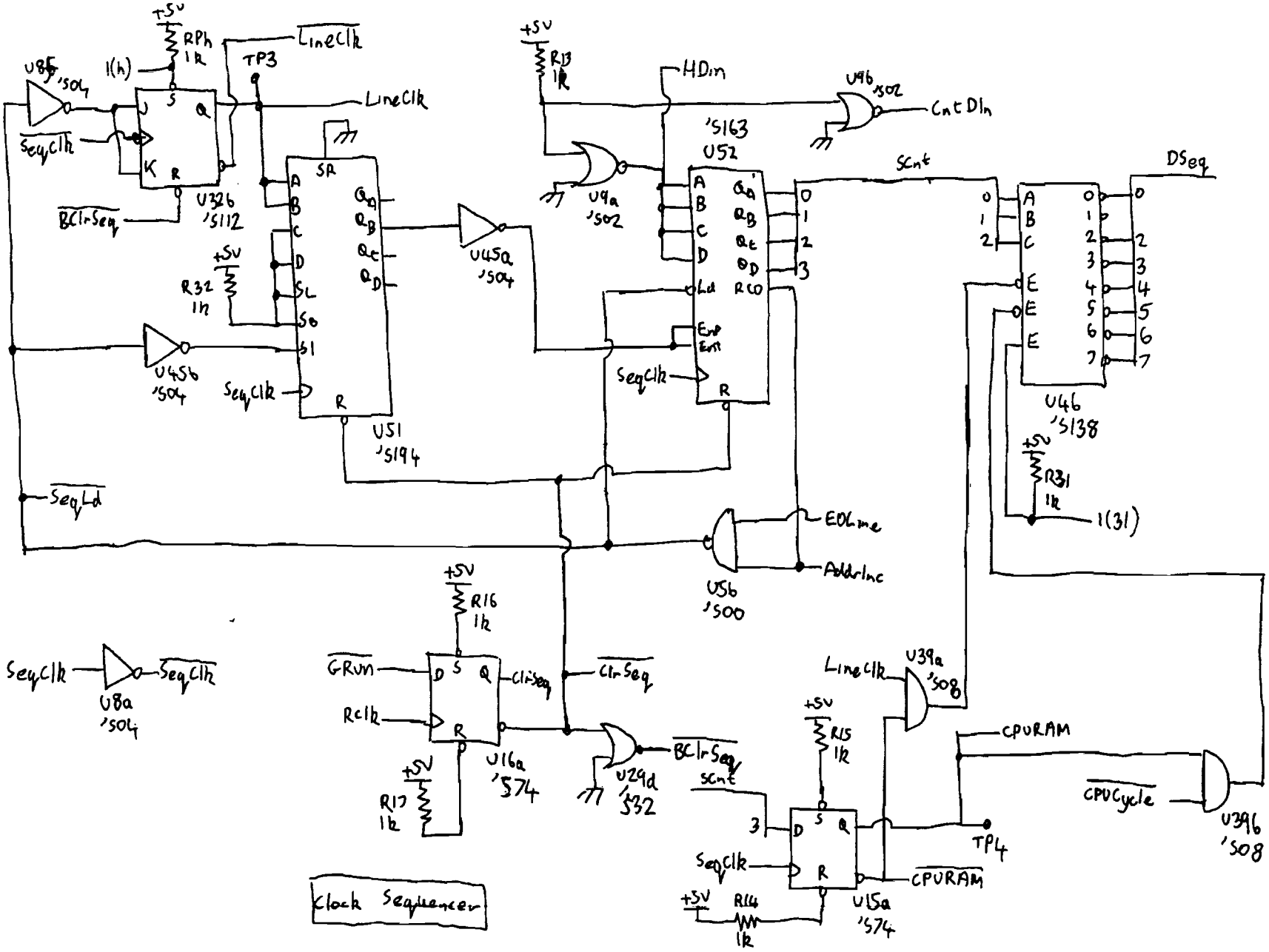

HP9836 Graphics PCB Sheet (2) 09826-66577

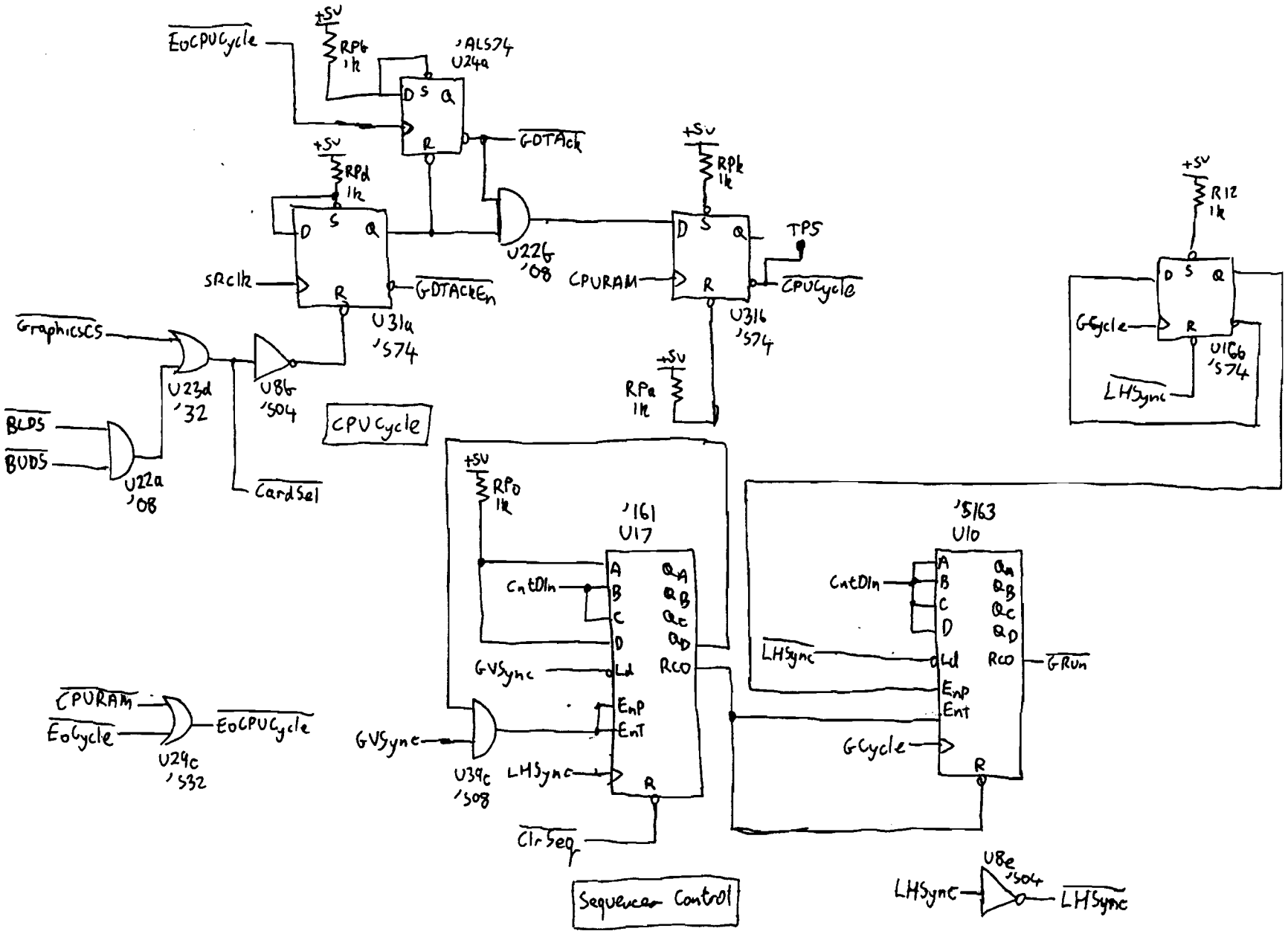

HP9836 Graphics PCB Sheet 3 09826-66577

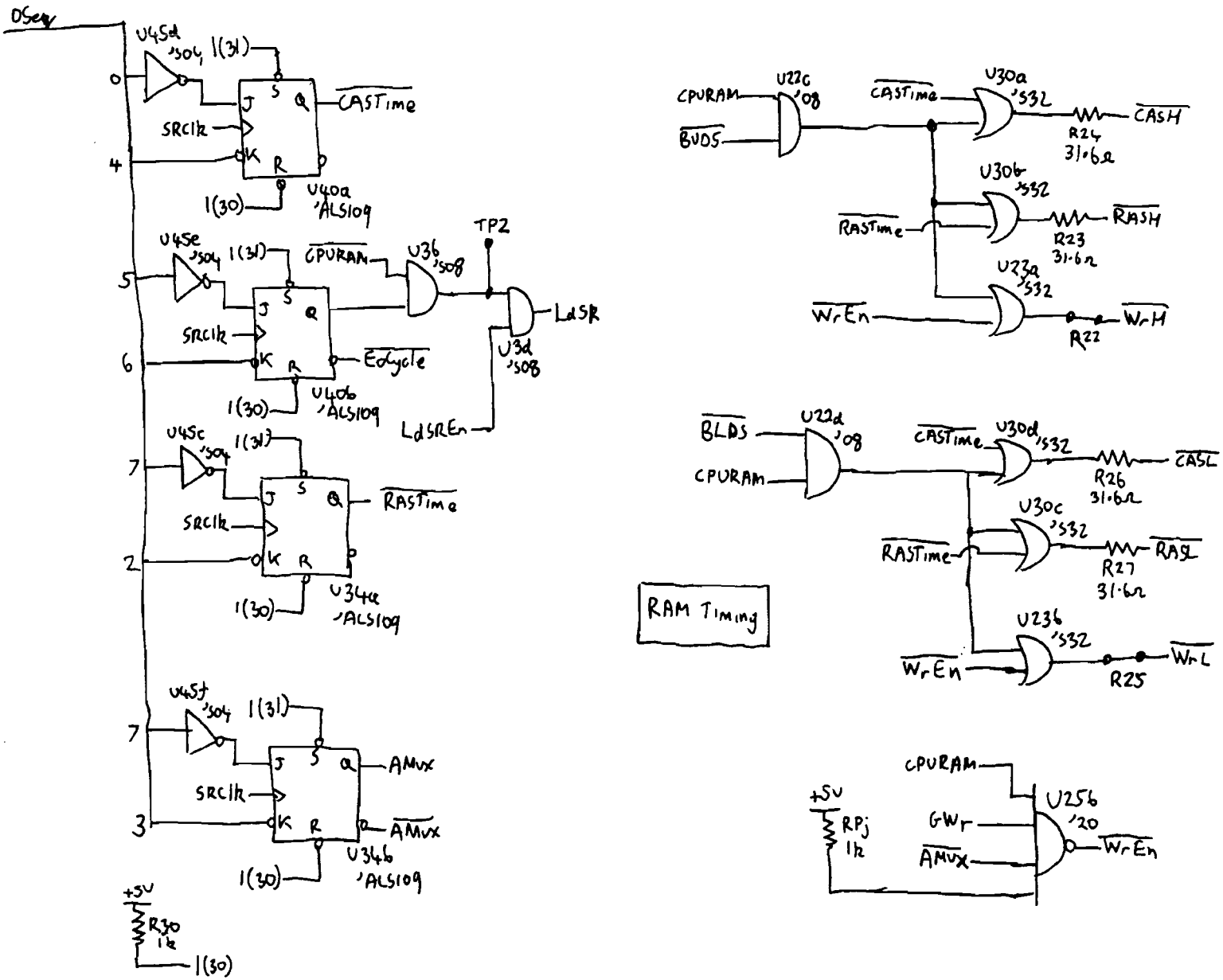

HP9836 Graphics PCB Sheet (4) 09826-66577

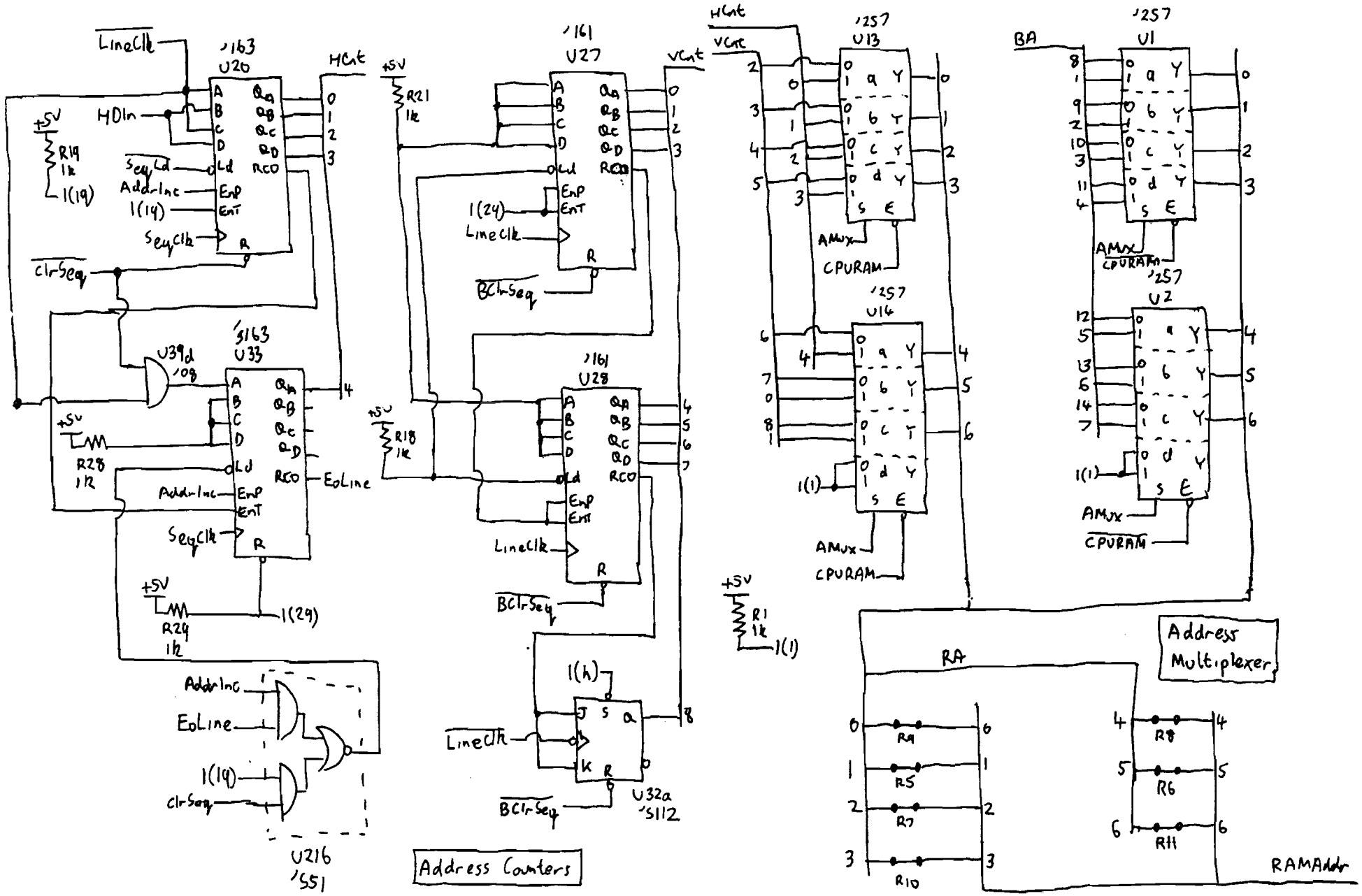

HP9836 Graphics PCB Sheet (5) 09826-66577

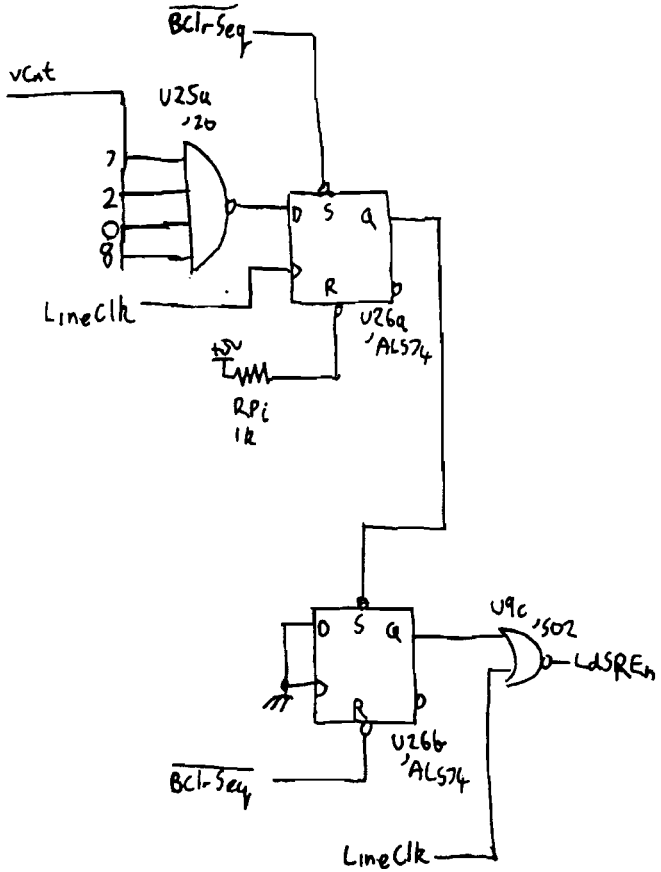

End of Picture

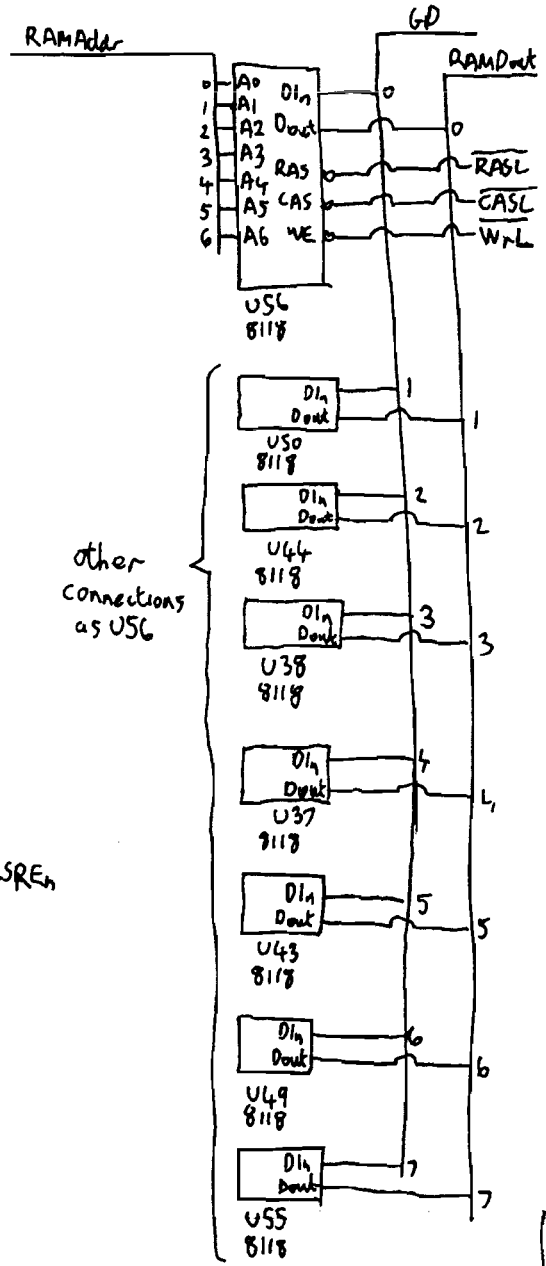

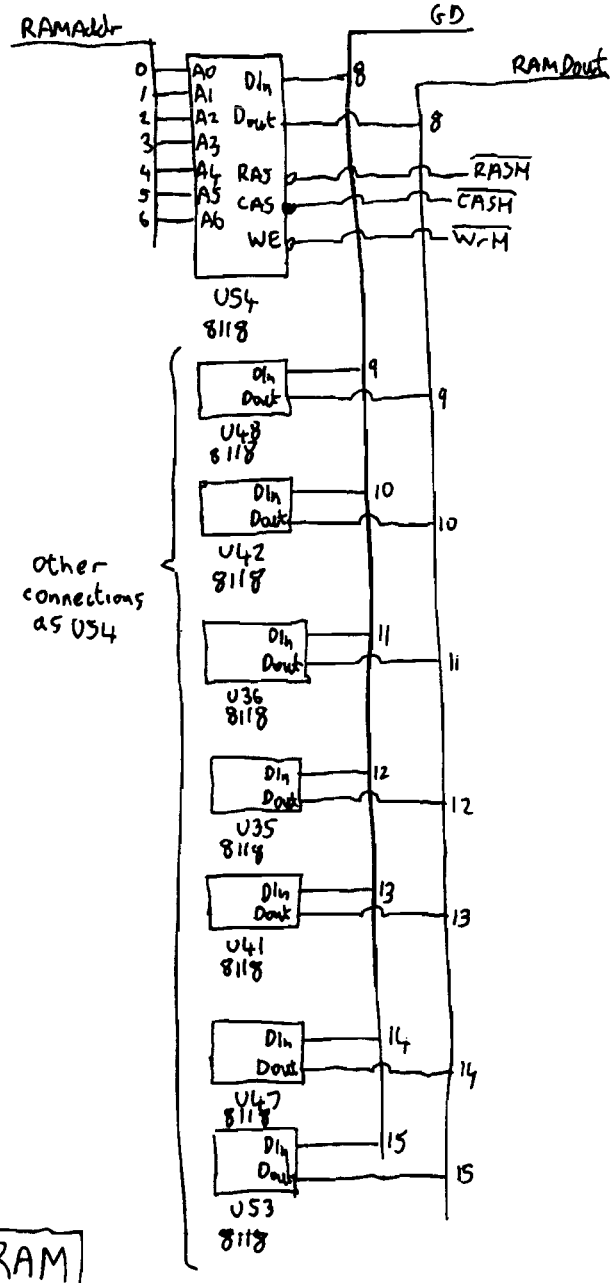

RAM

HP9836 Graphics PCB Sheet 6 09826-66577

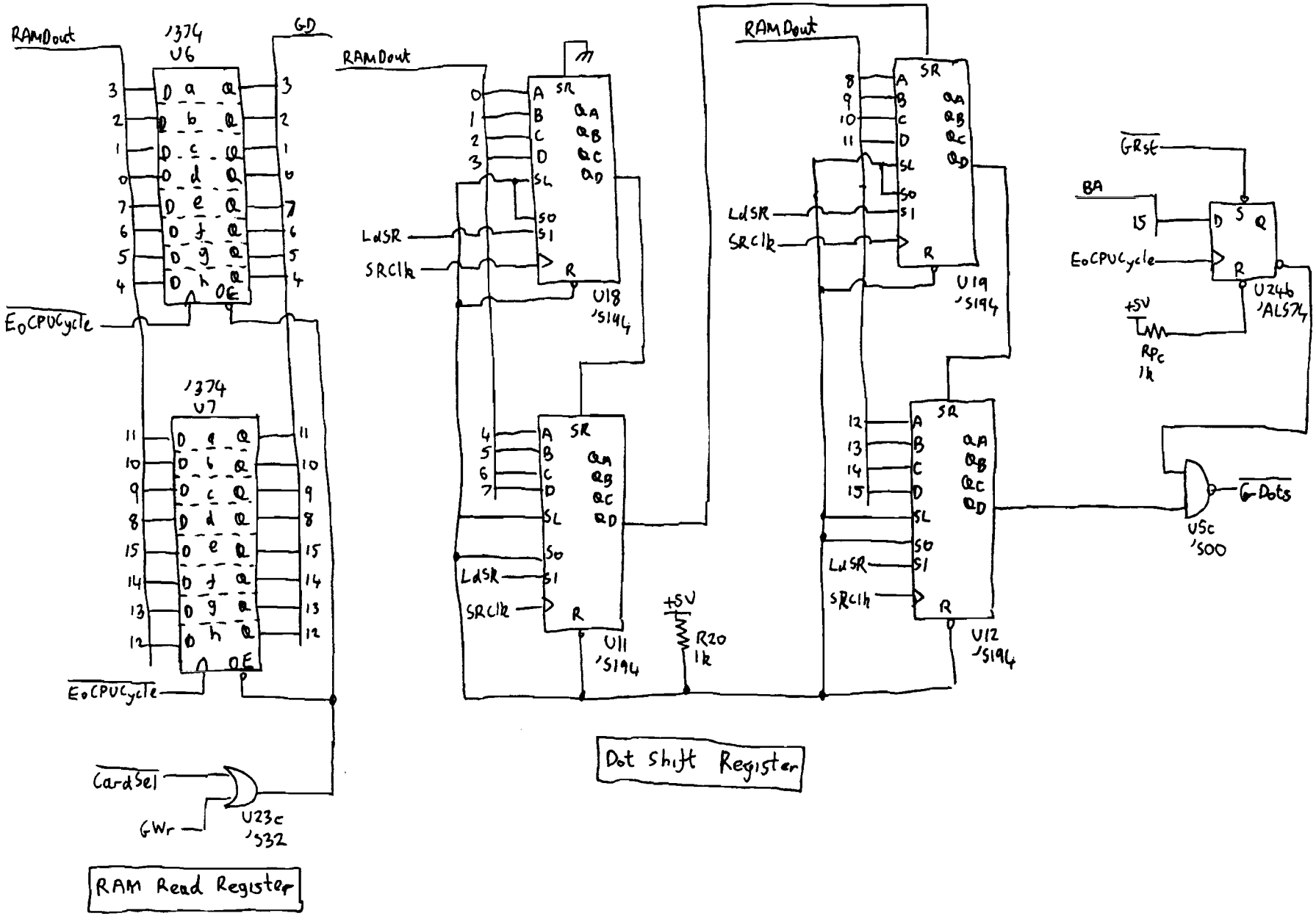

HP9836 Graphics PCB Sheet 7 09826-66577

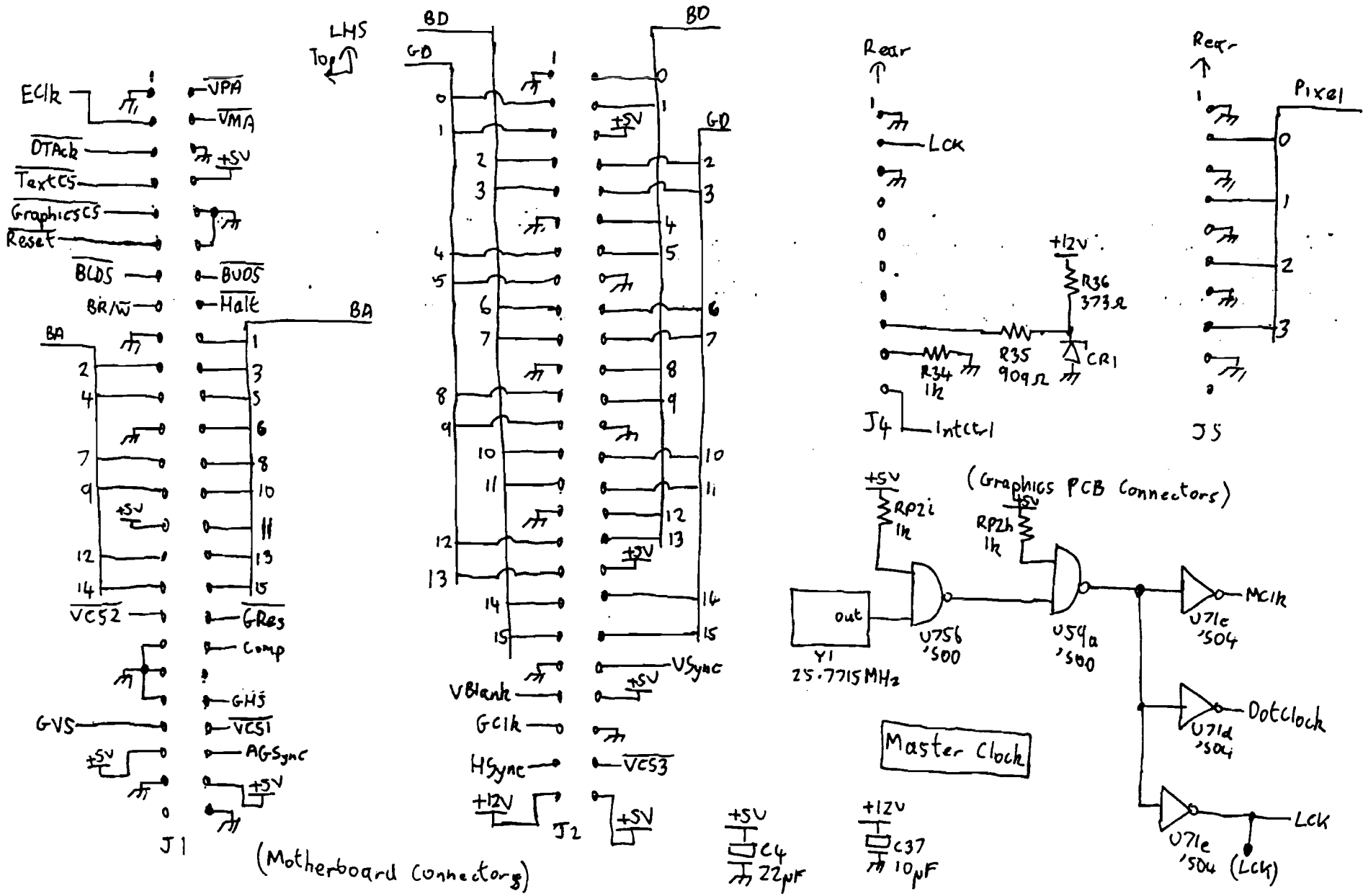

HP9836C Text Video PCB Sheet 1 09836-66572

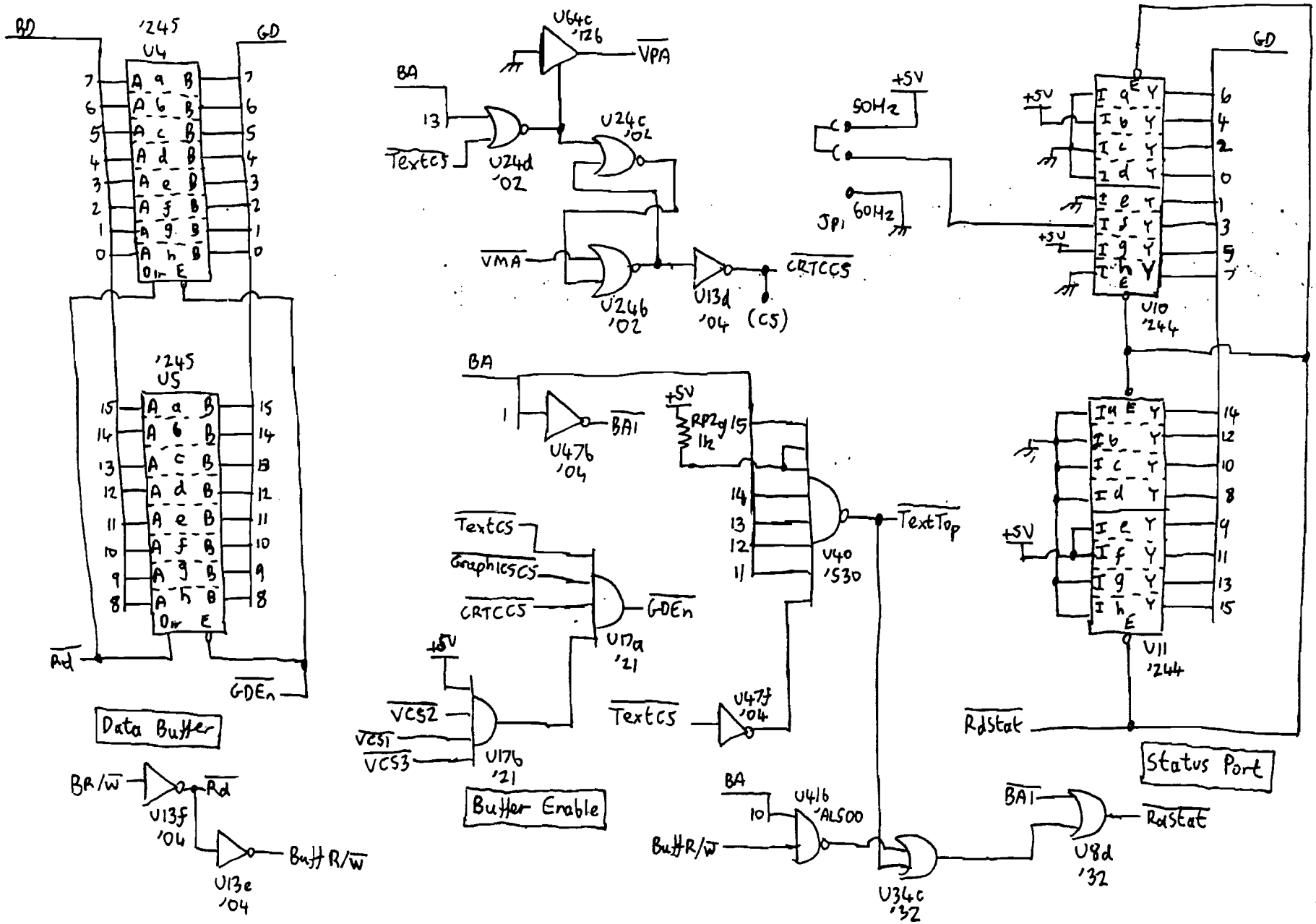

HP9836C Text Video PCB Sheet 2 09836-66572

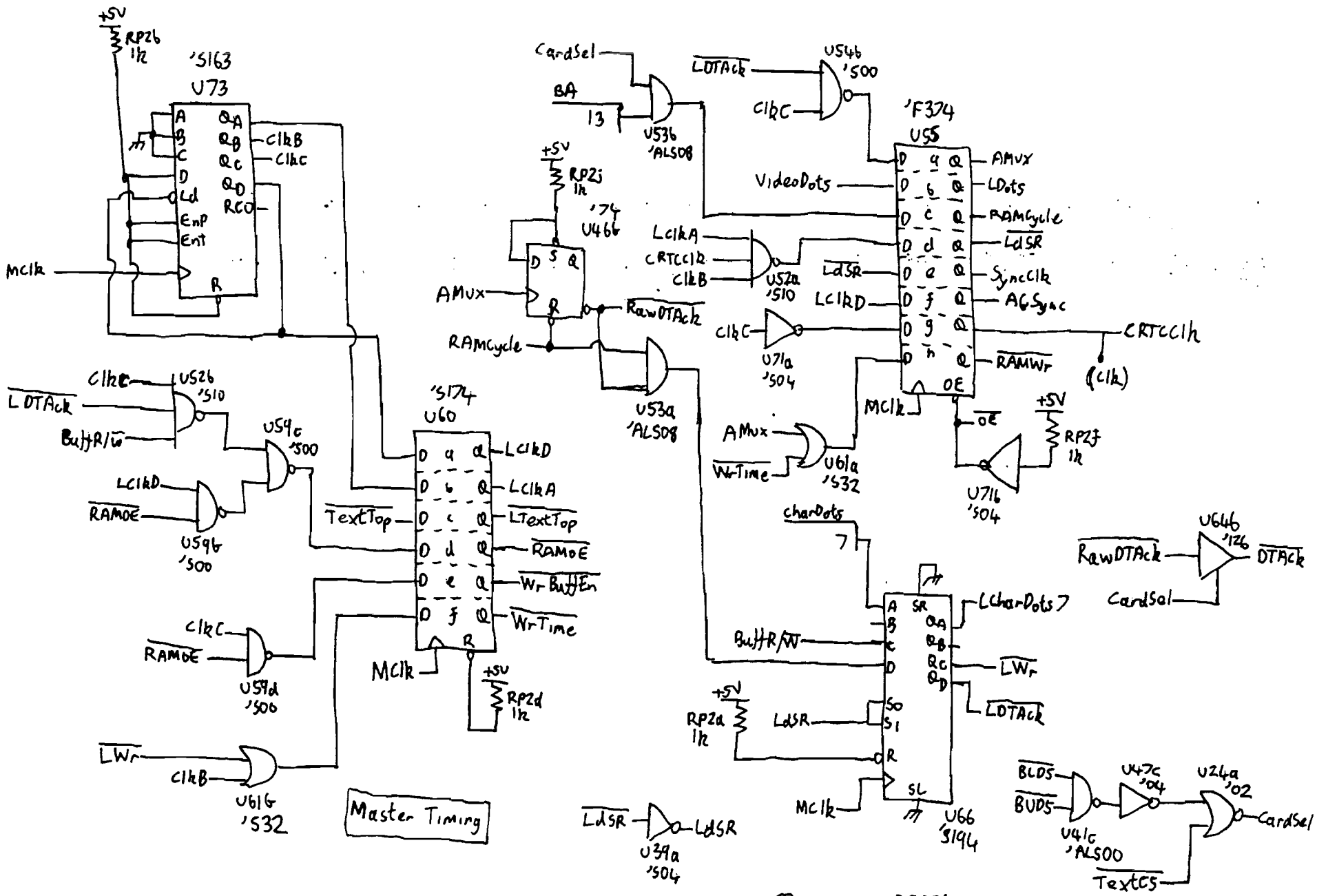

HP9836C Text Video PCB Sheet 3 09836-66572

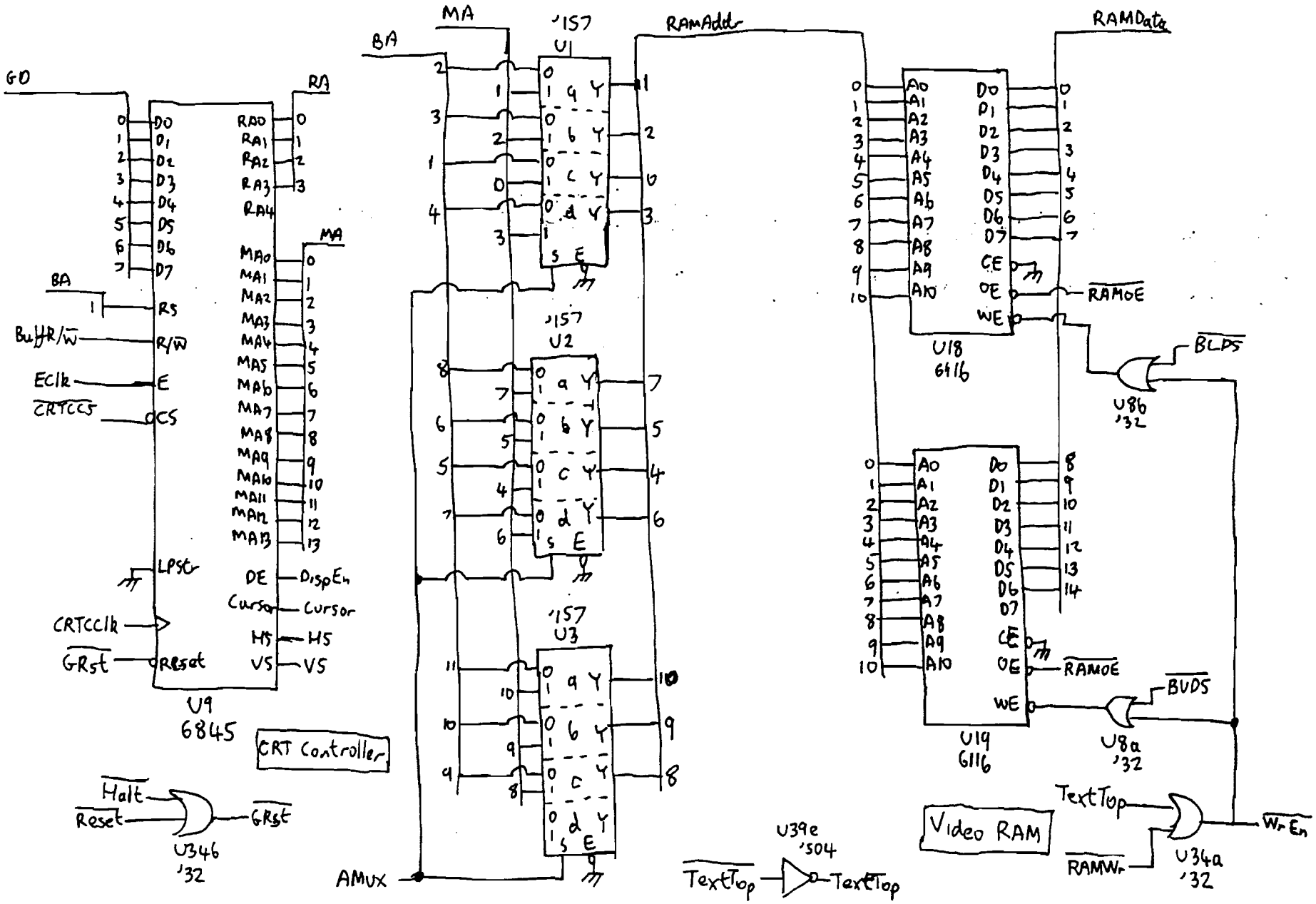

HP9836C Text Video PCB Sheet (4) 09836-66572

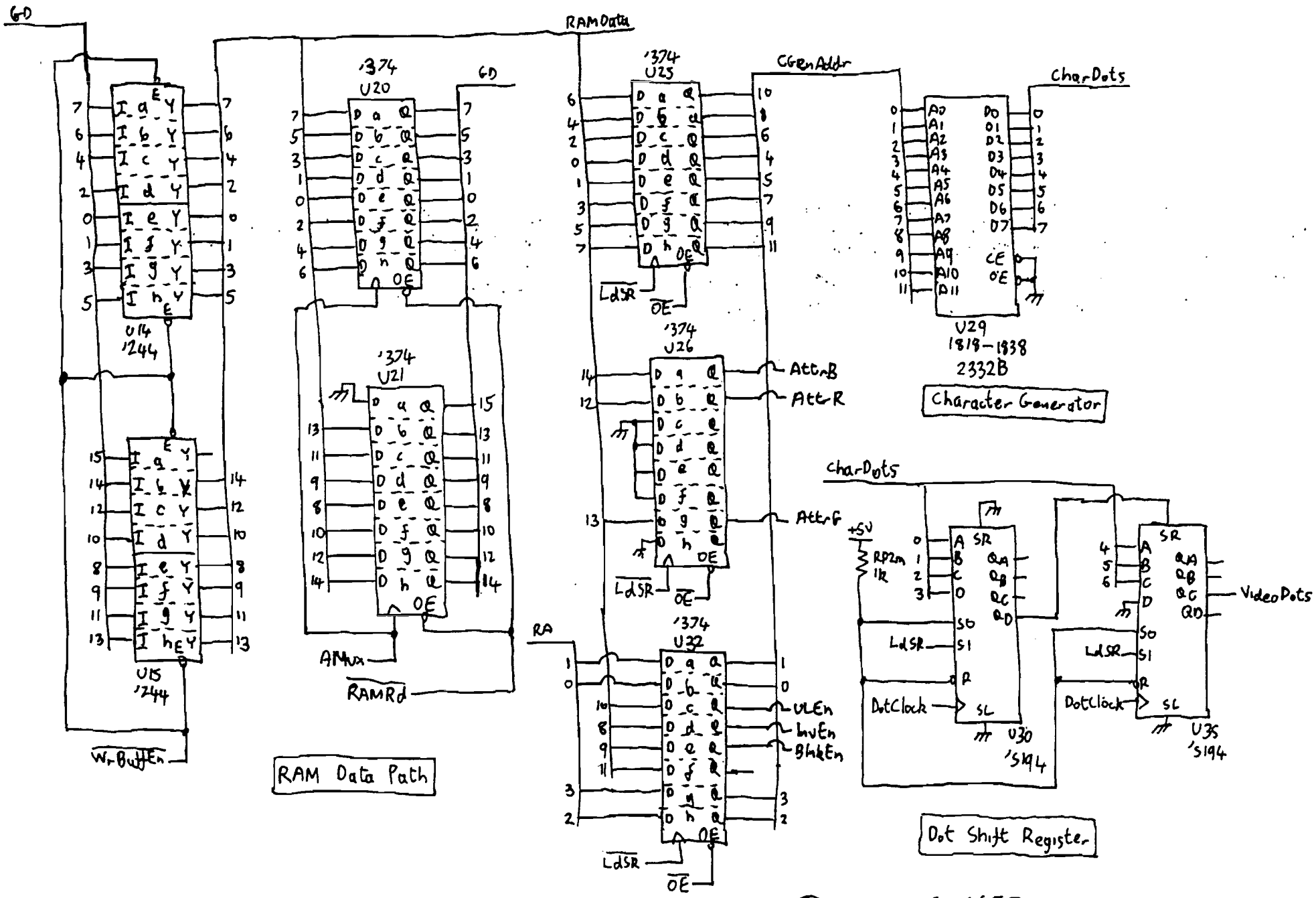

HP9836 C Text Video PCB Sheet 5 09836-66572

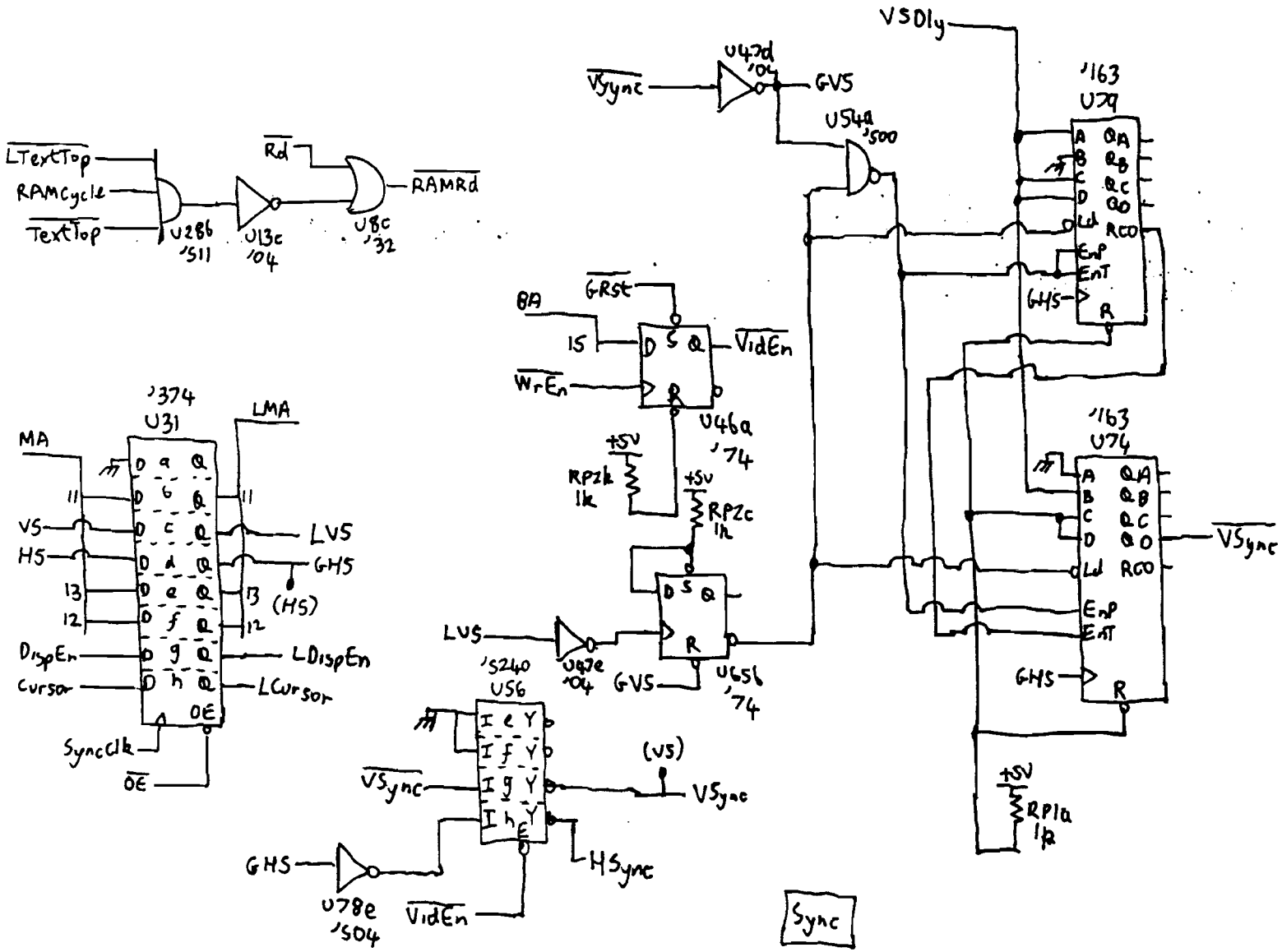

HP9836C Text Video PCB Sheet 6 09836-66572

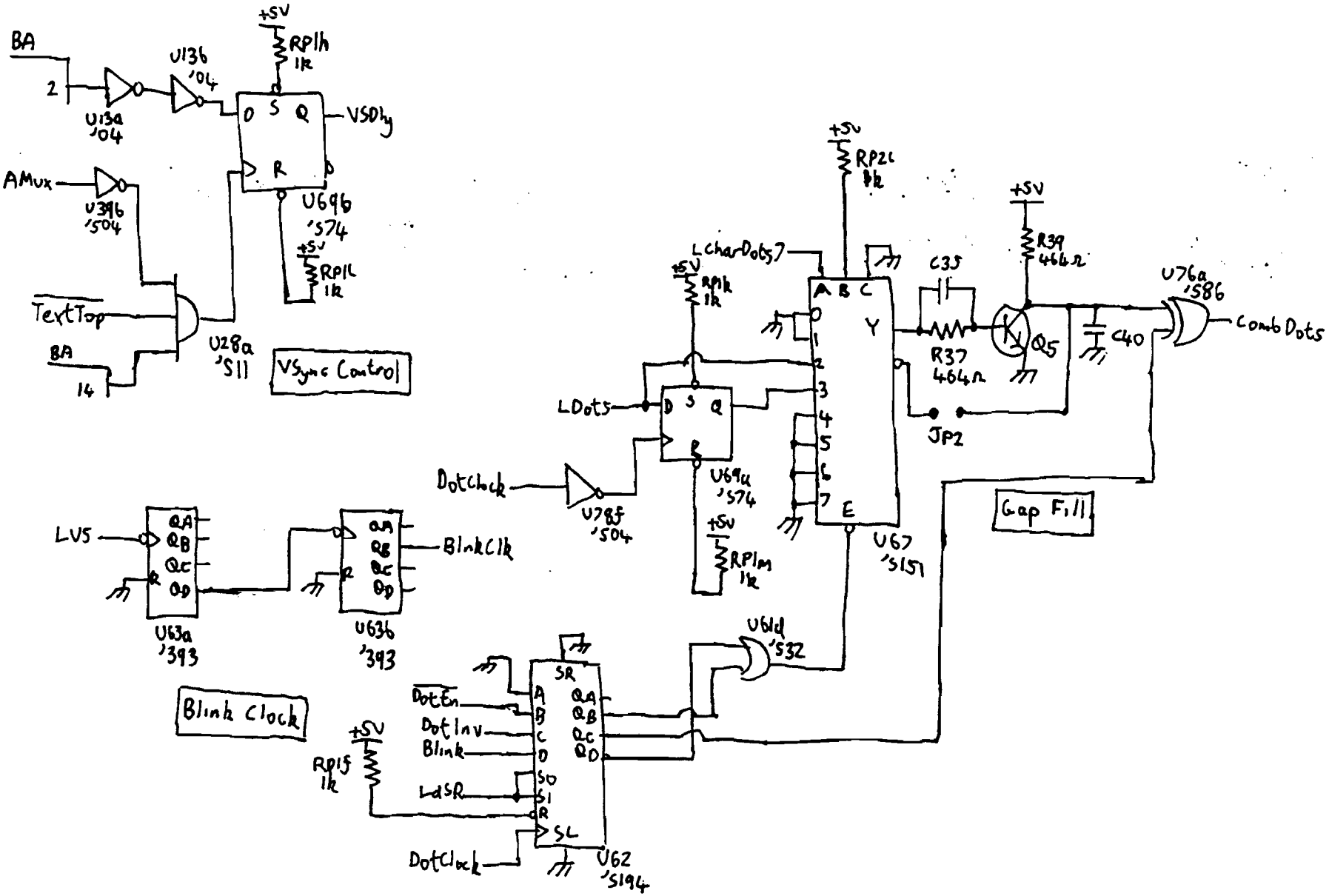

HP9836C Text Video PCB Sheet 7 09836-66572

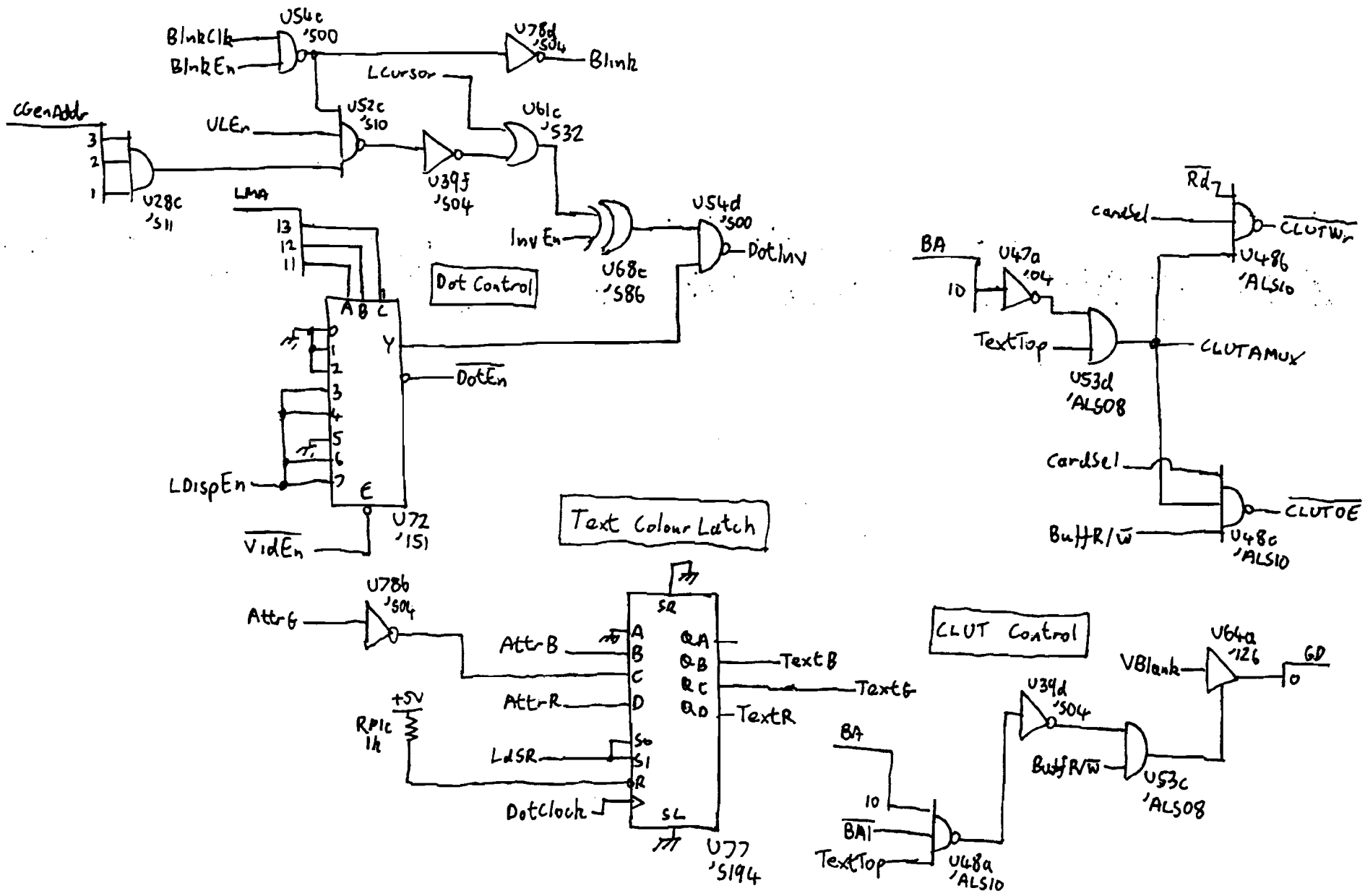

HP 9836C Text Video PCB Sheet 8 09836-66572

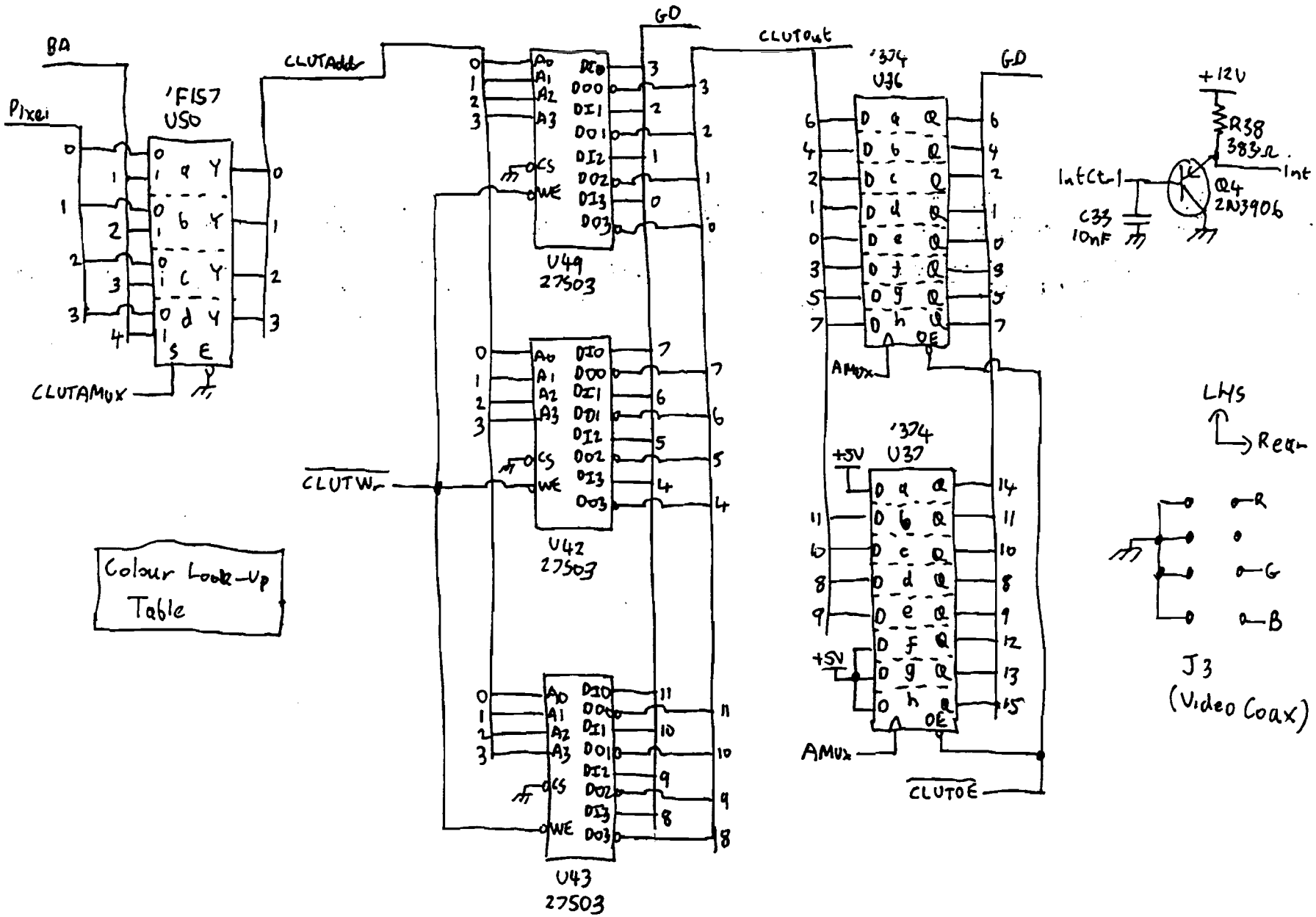

HP9836C Text Video PCB Sheet (9) 09836-66572

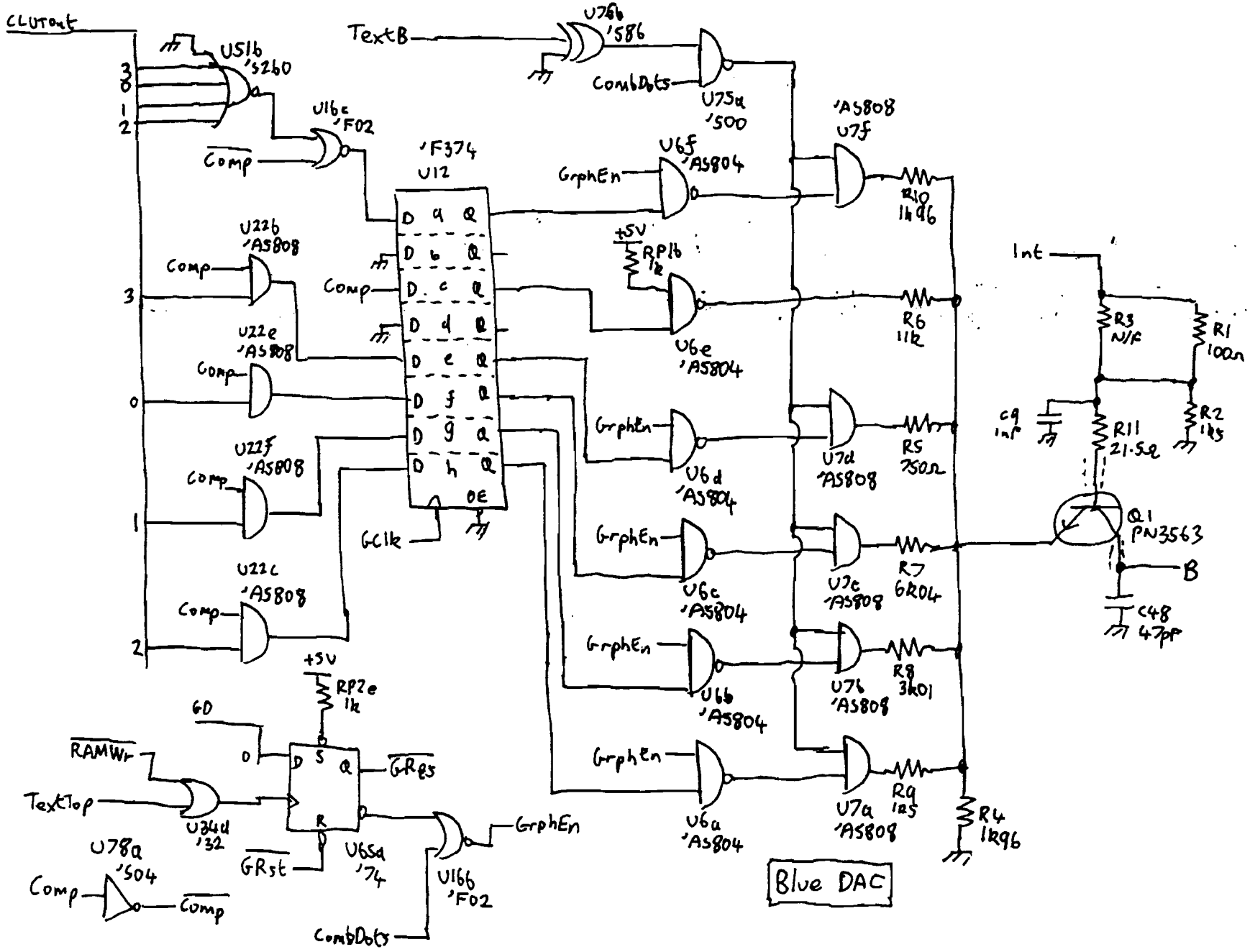

HP9836C Text Video PCB Sheet (10) 09836-66572

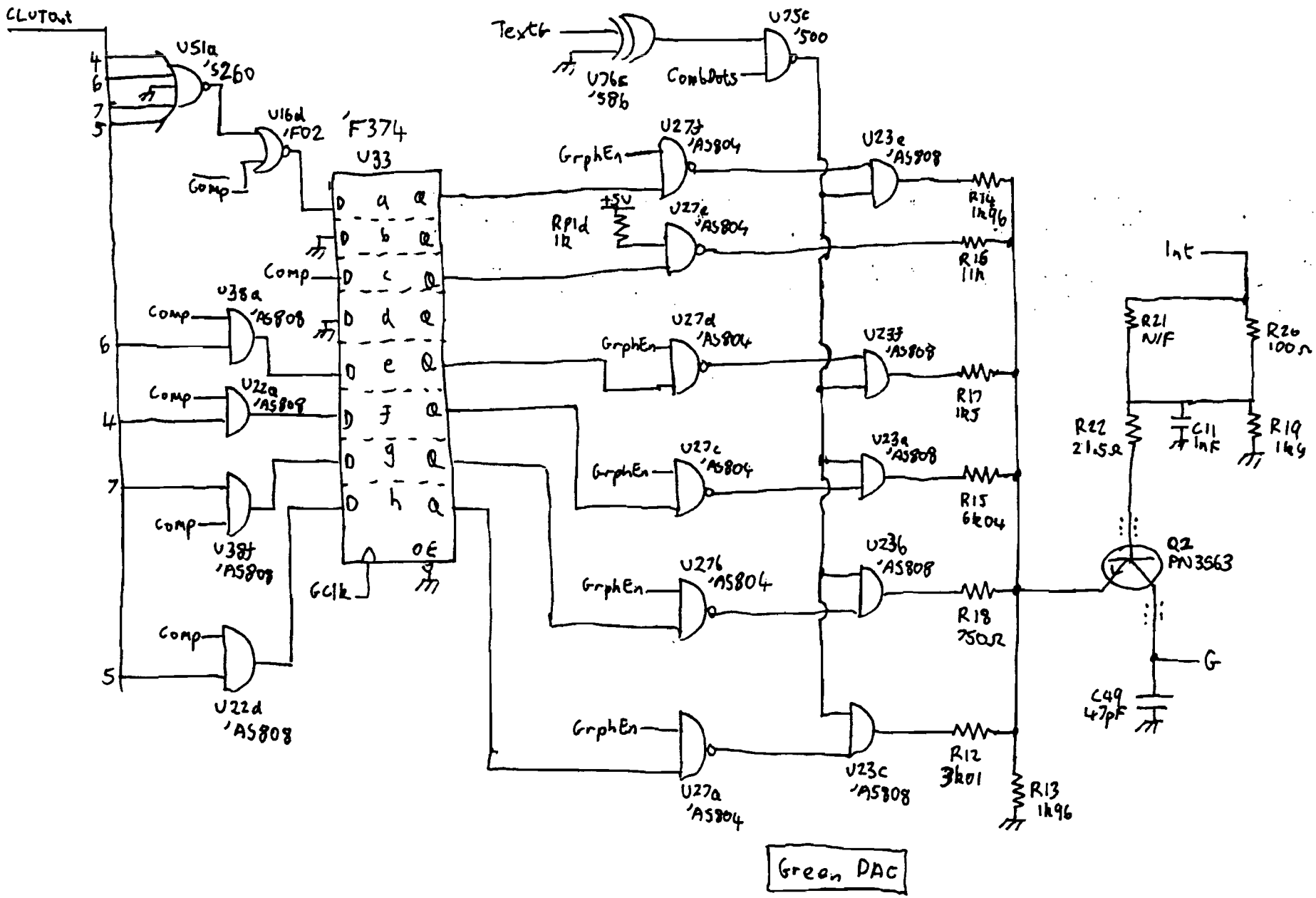

HP9836C Text Video PCB Sheet (11) 09836-66572

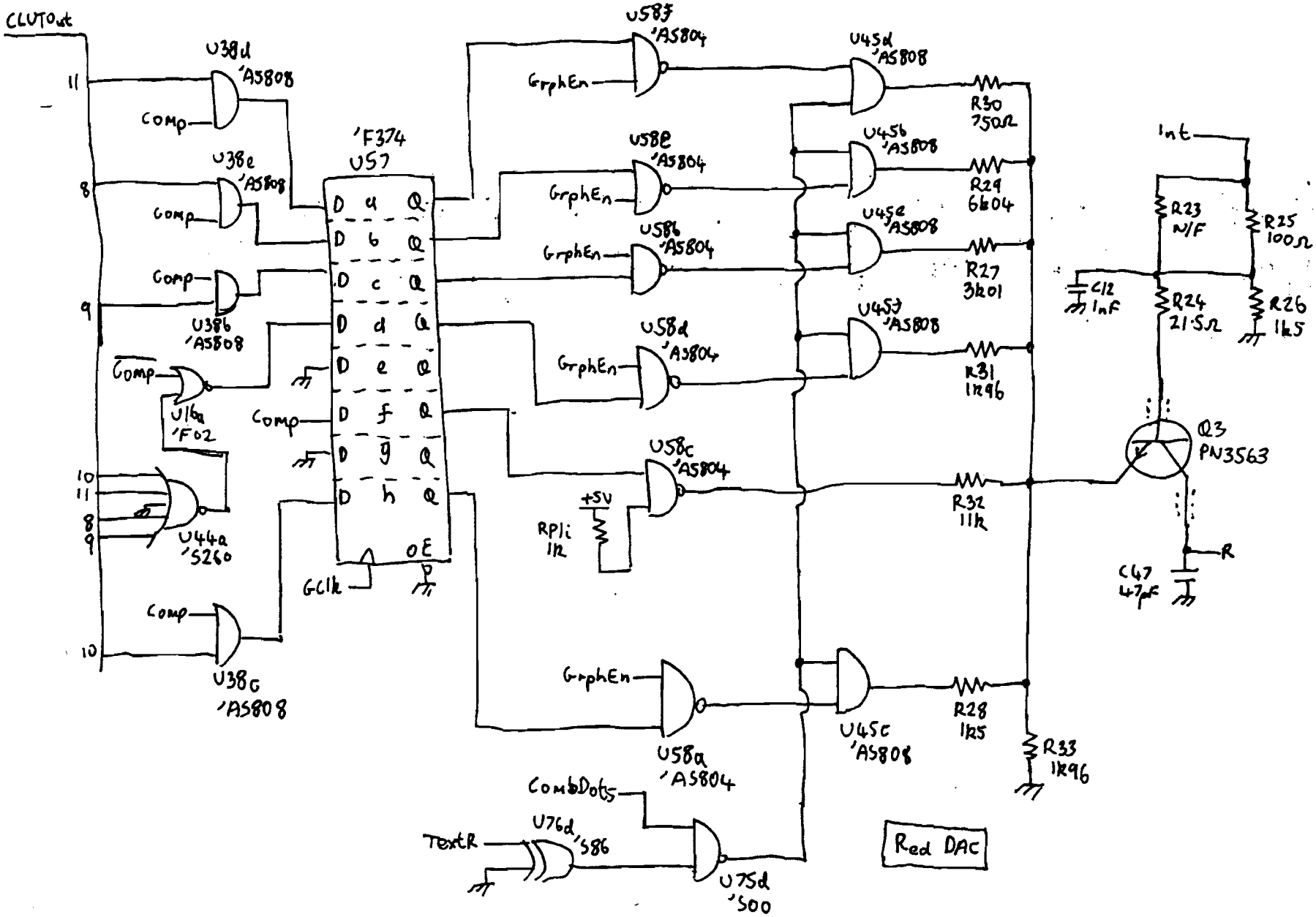

HP9836C Text Video PCB Sheet (12) 09836-66572

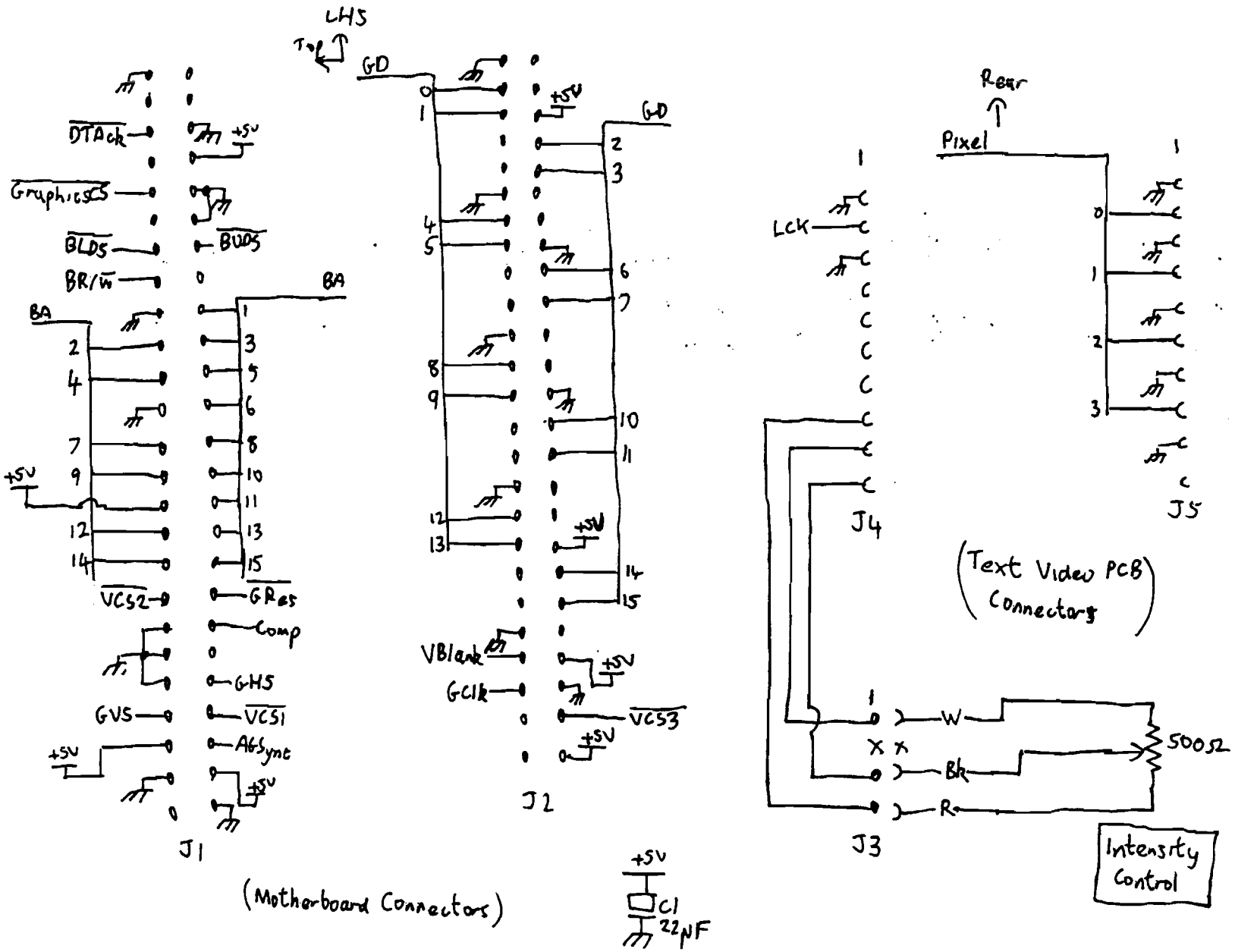

HP9836C Graphics PCB Sheet ① 09836-66573

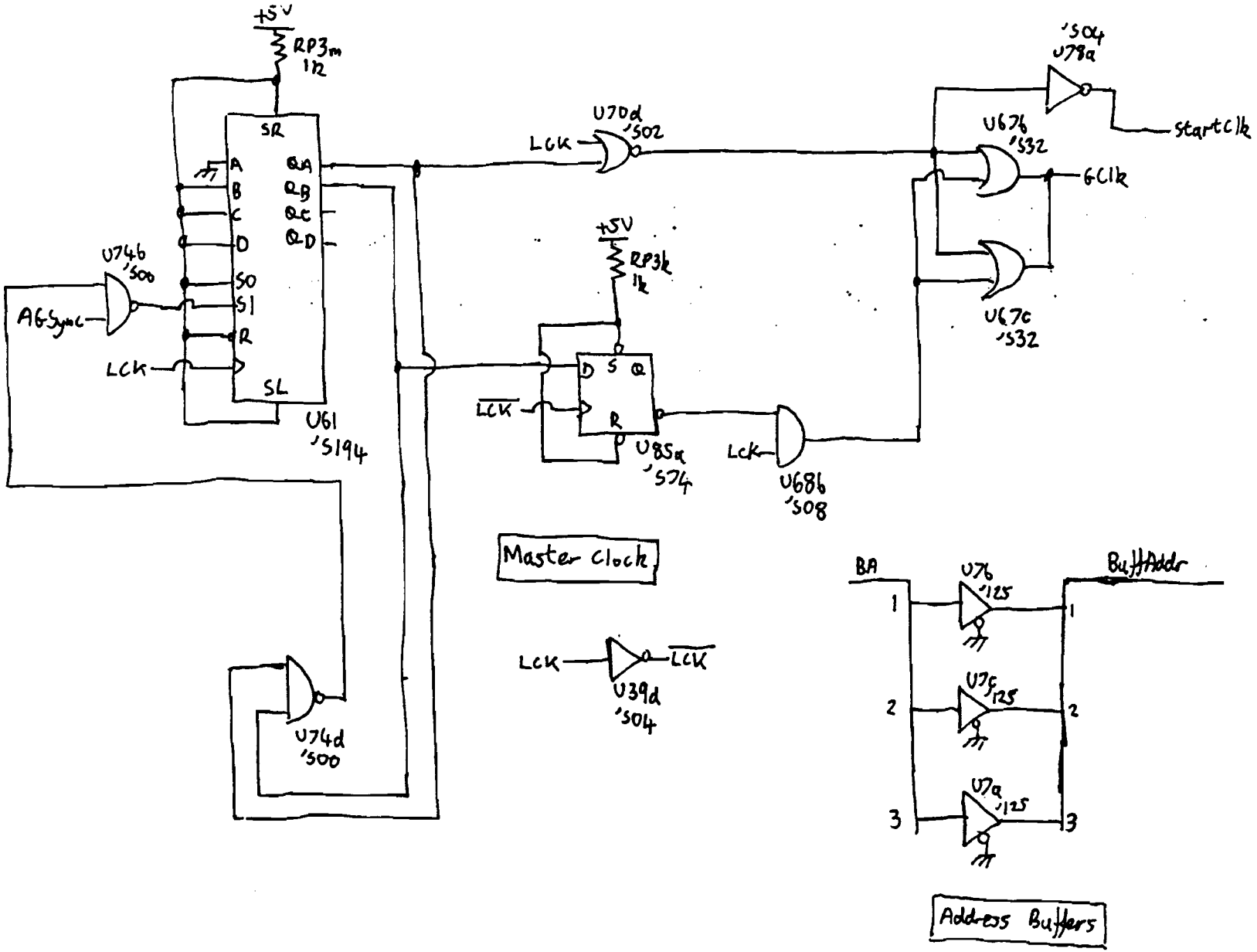

09836-66573

HP9836C Graphics PCB Sheet(2)

)

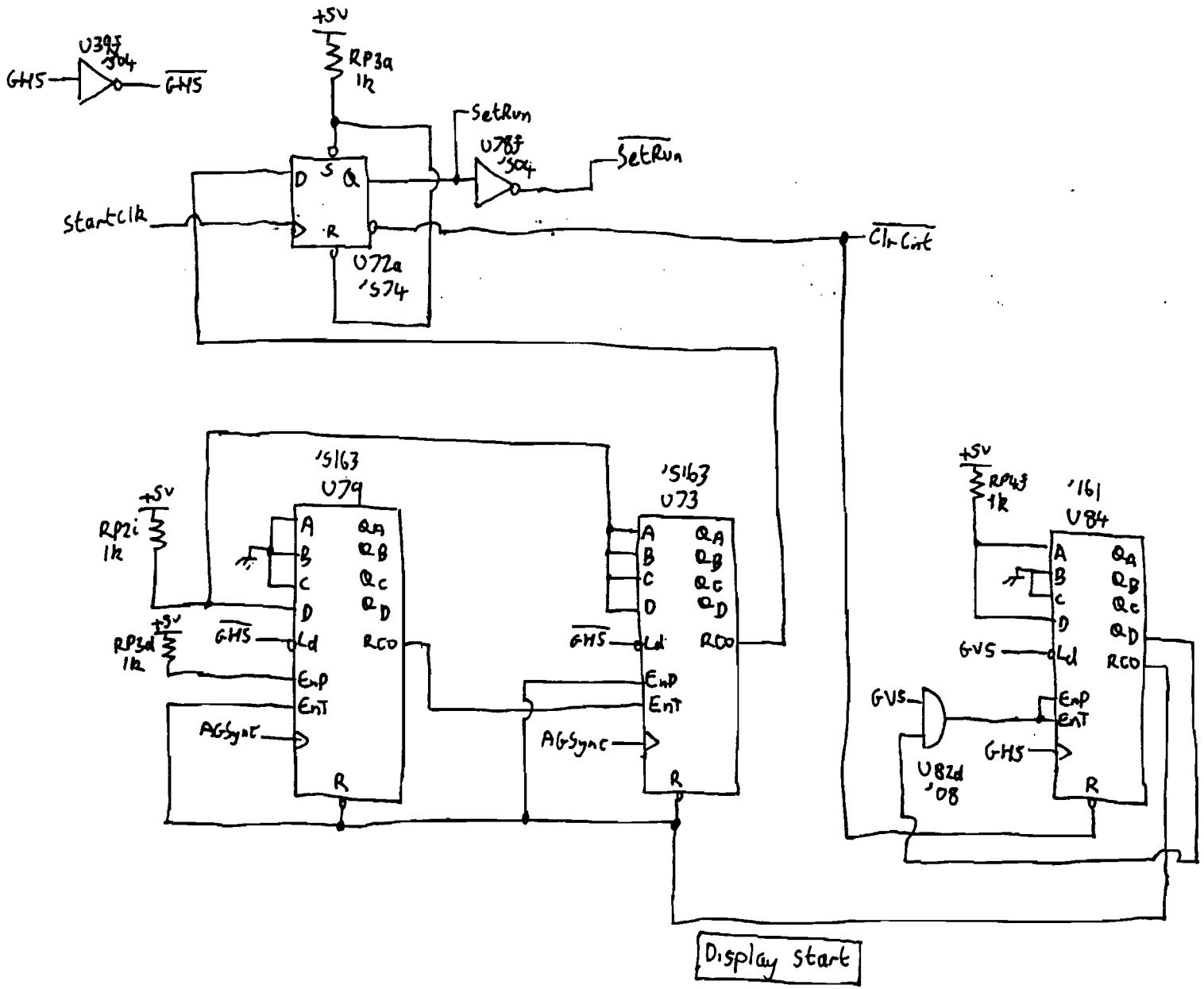

HP9836C Graphics PCB Sheet 3 09836-66573

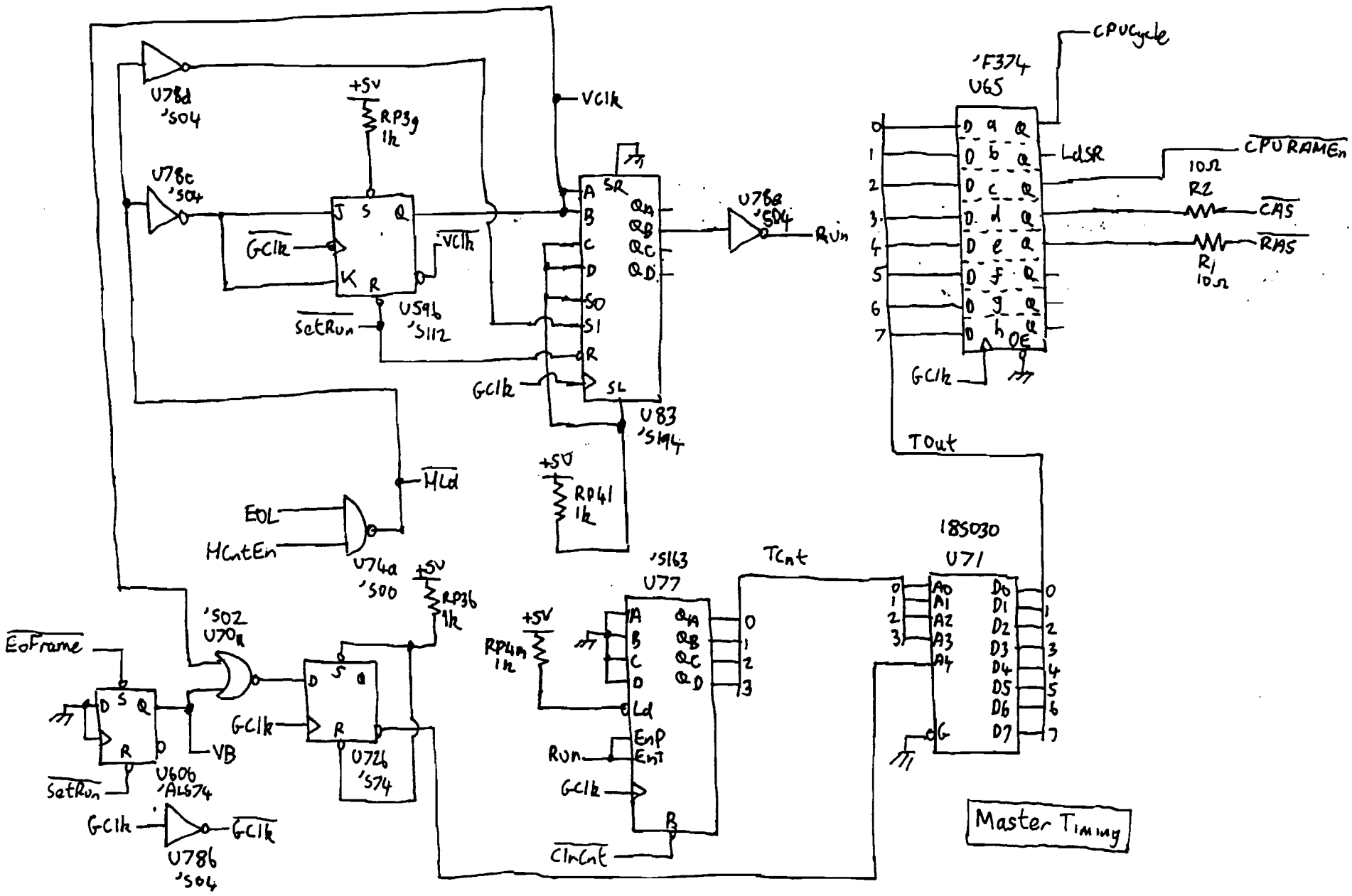

HP9836C Graphics PCB Sheet (4) 09836-66573

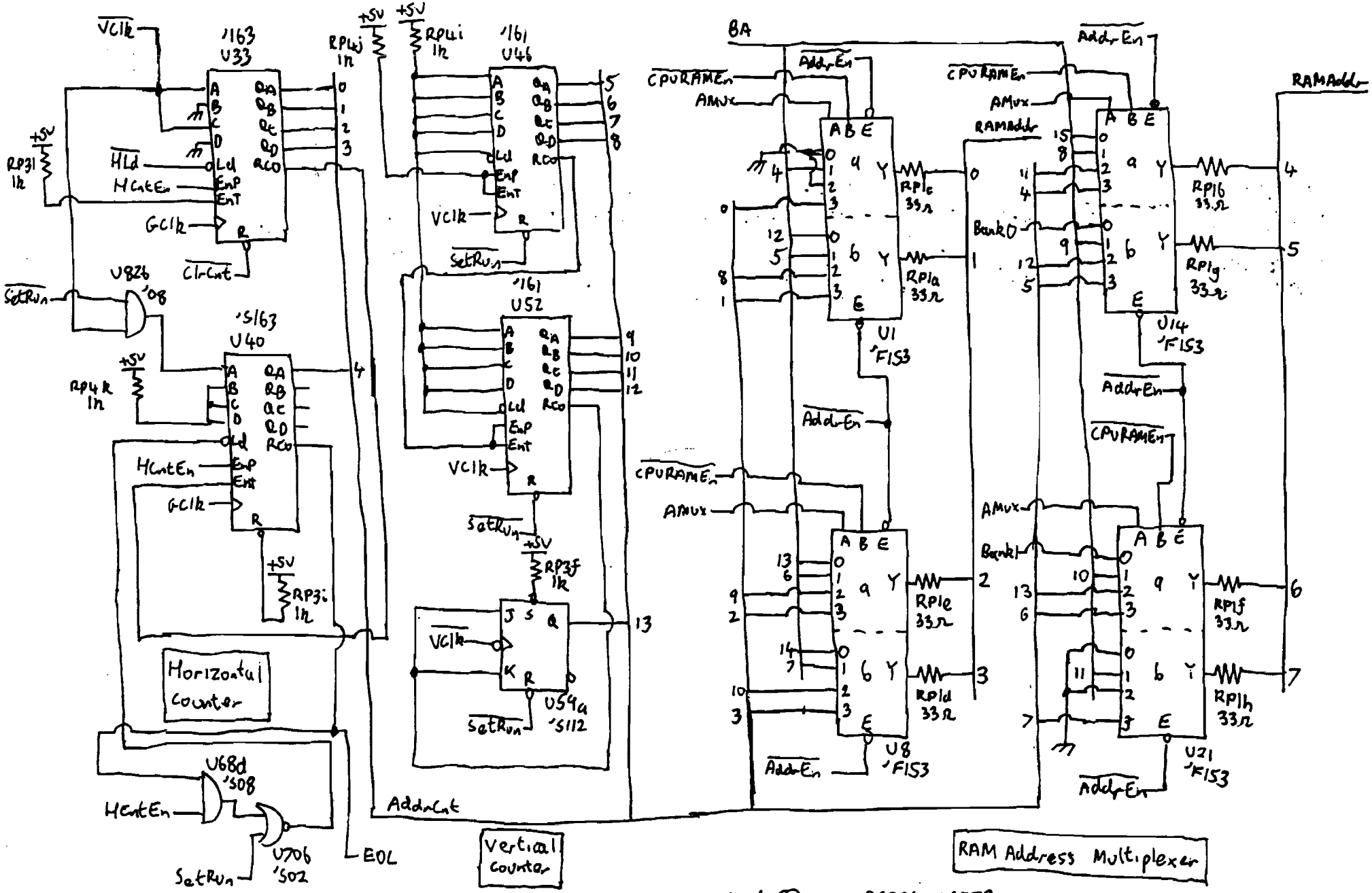

HP9836C Graphics PCB Sheet 5 09836-66573

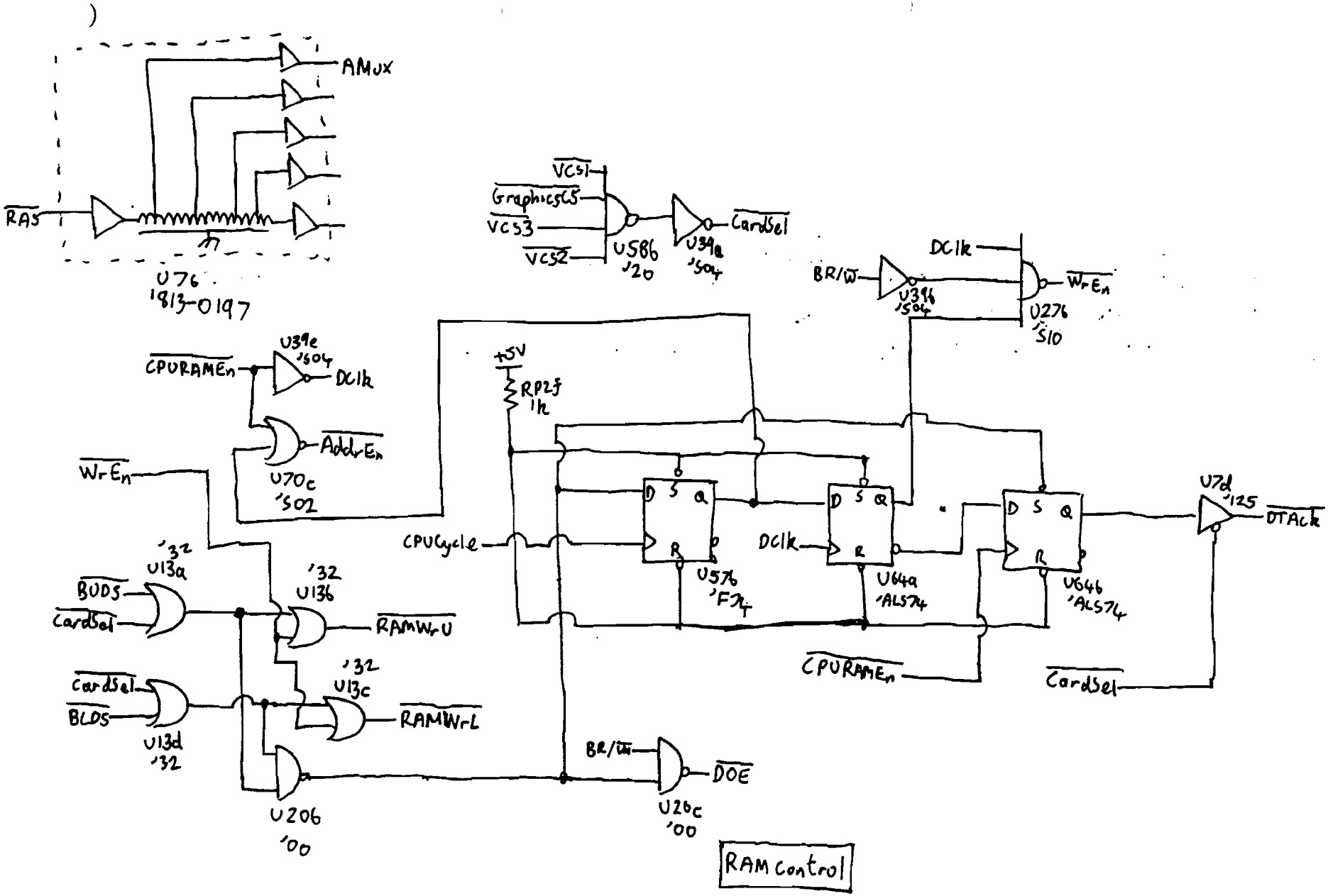

HP9836C Graphics PCB Sheet (6) 09836-66573

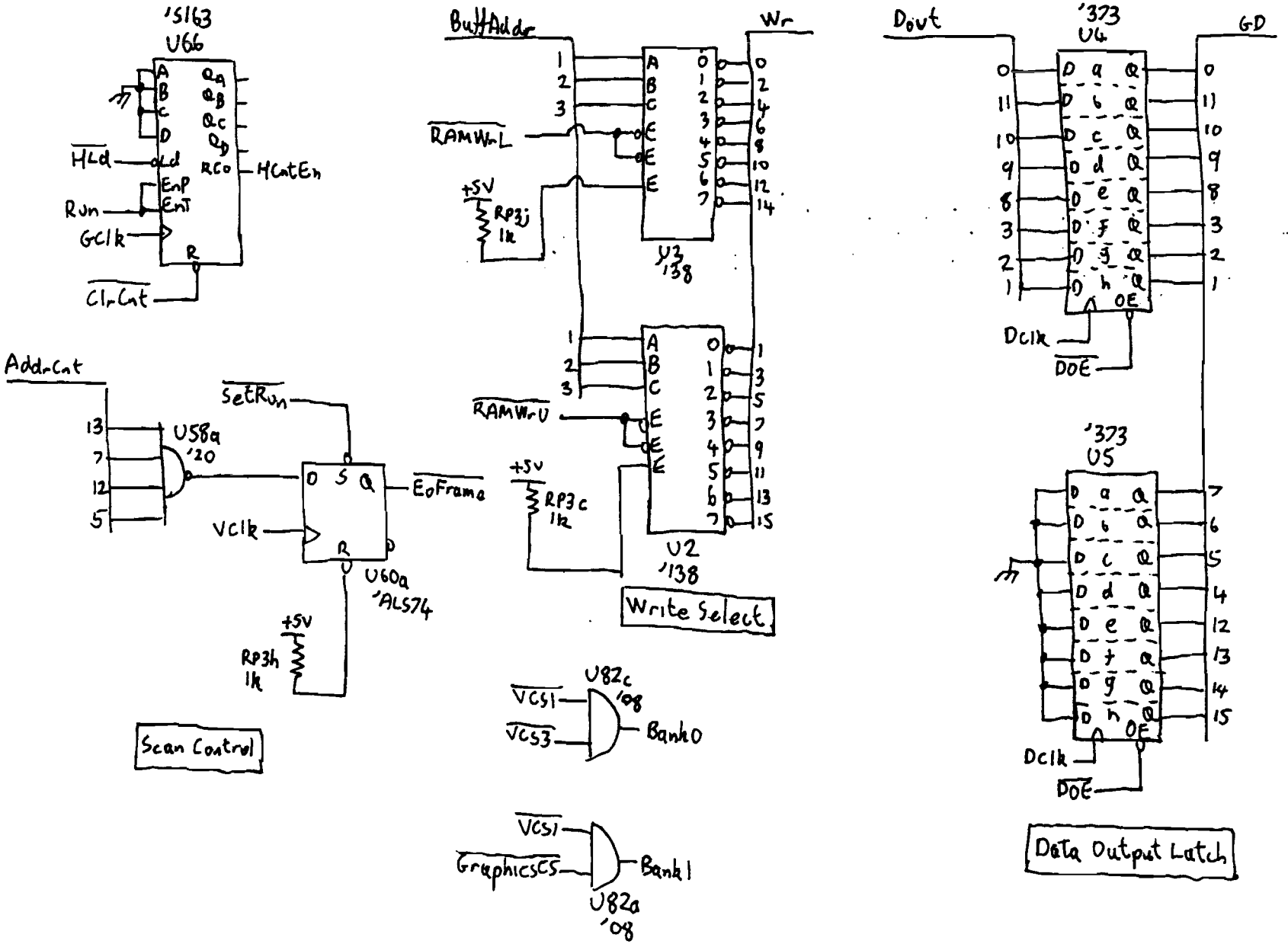

HP9836C Graphics PCB Sheet (7) 09836-66573

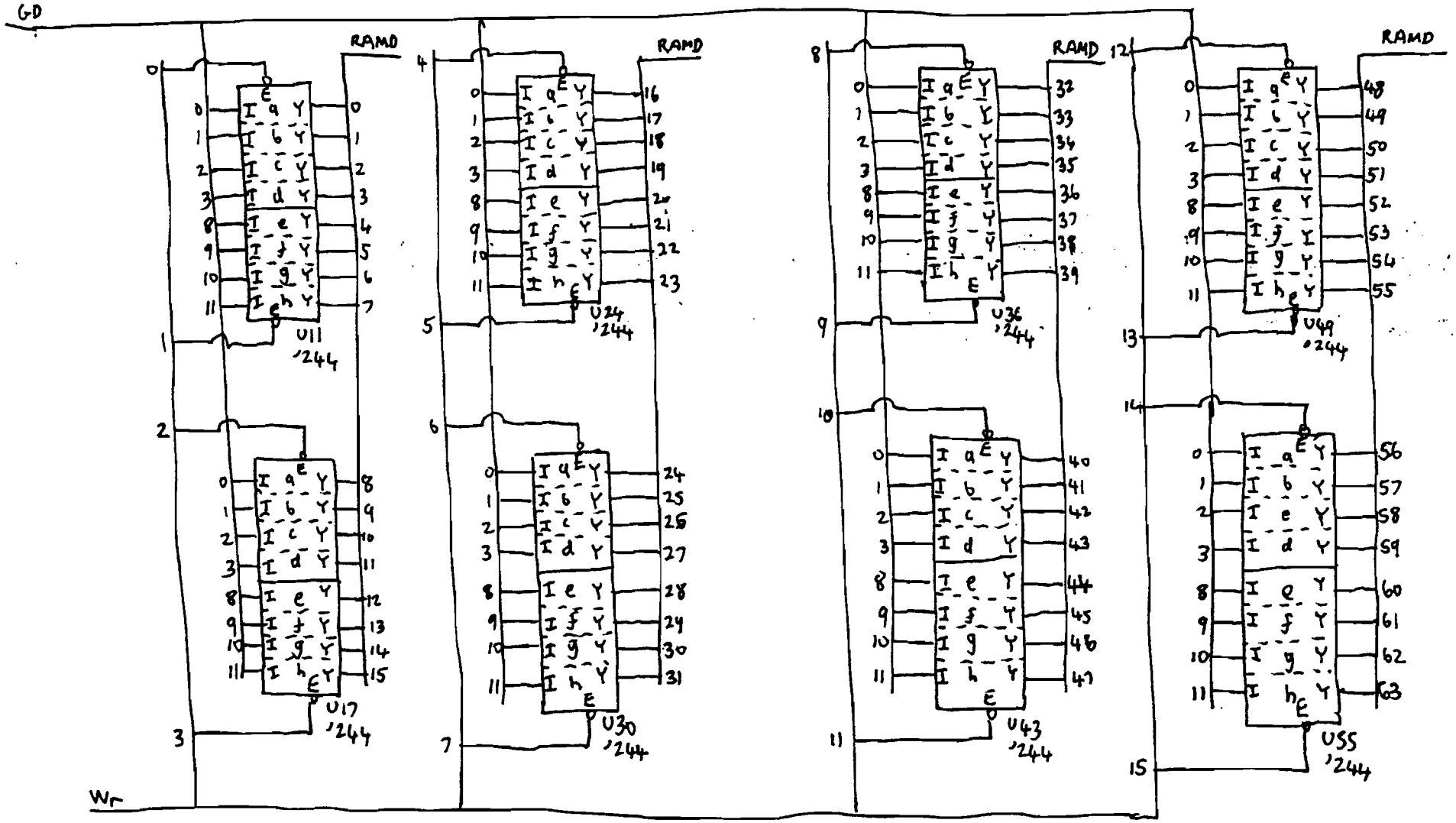

RAM Input Buffers

HP9836C Graphics PCB Sheet (8) 09836-66573

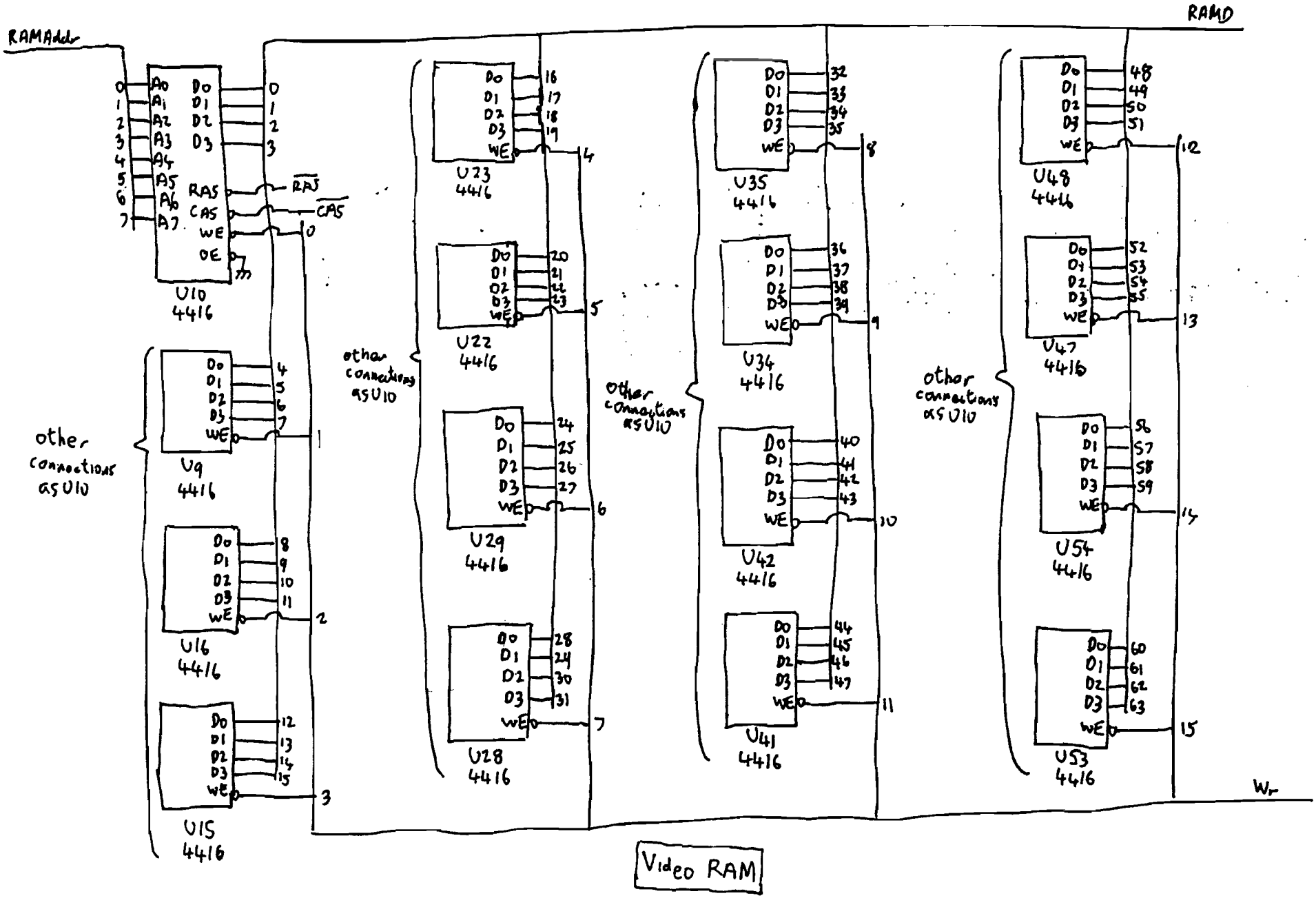

HP9836C Graphics PCB Sheet (9) 09836-66573

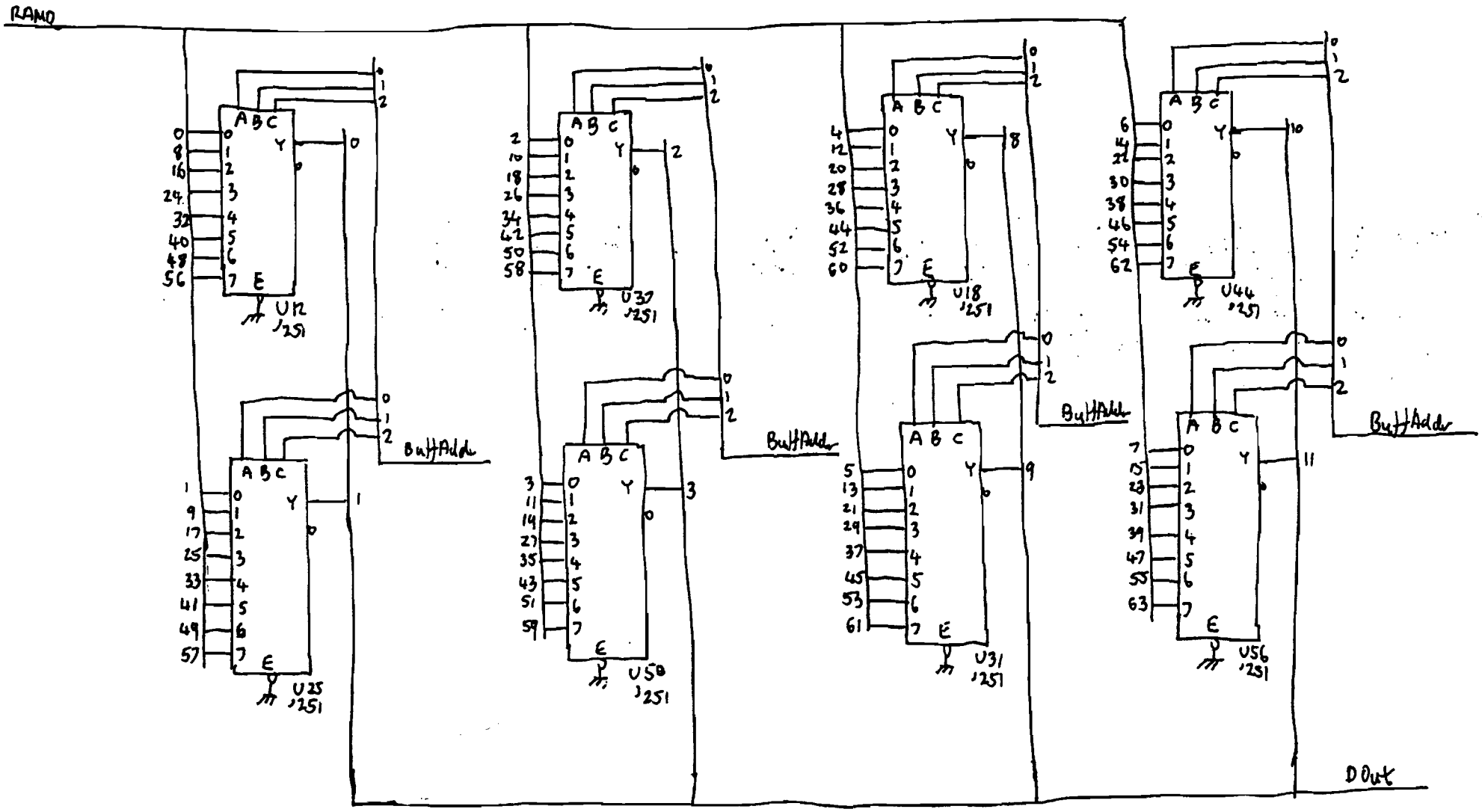

RAM Read Multiplexer

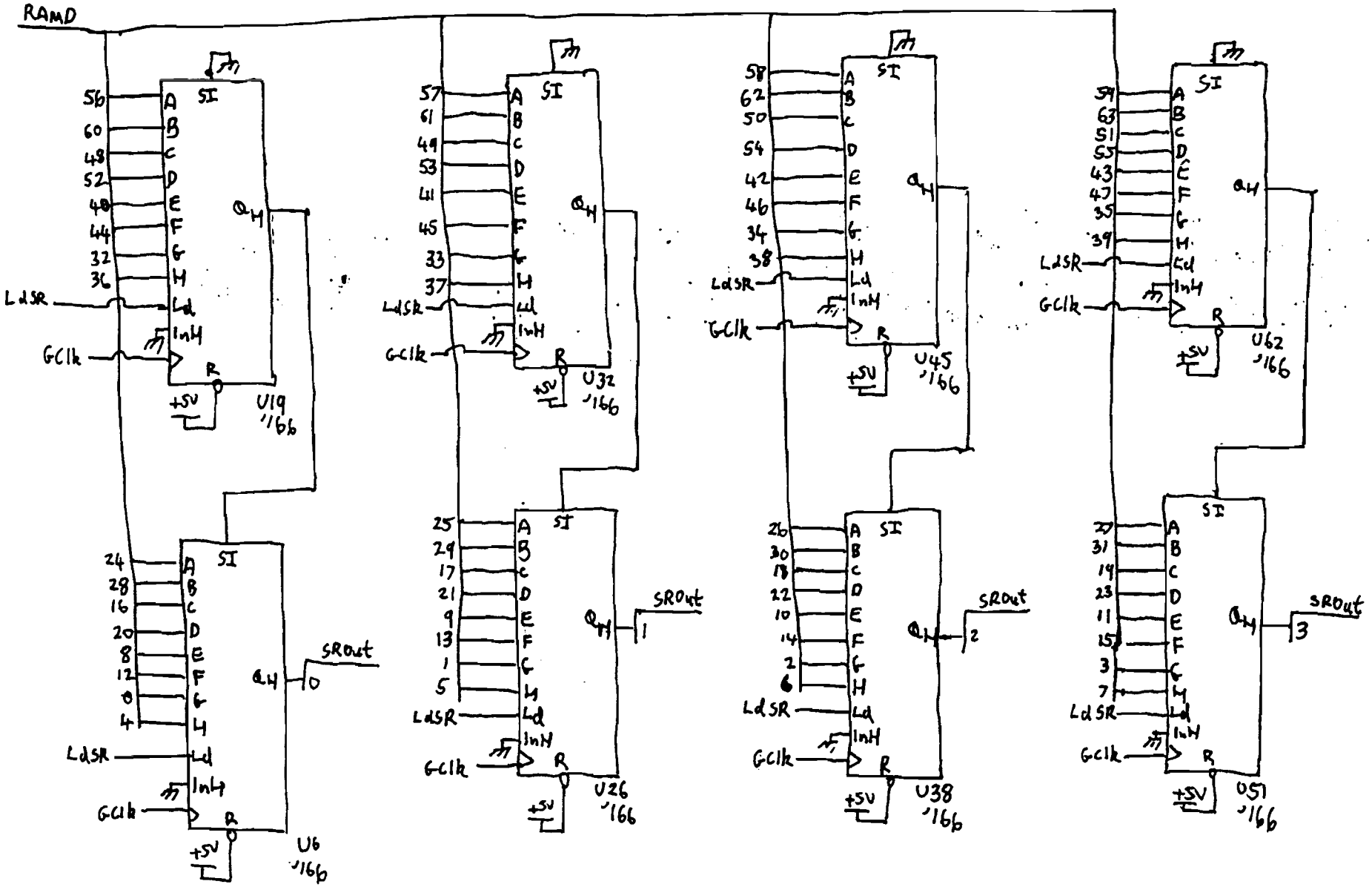

Dot Shift Register

HP9836C Graphics PCB Sheet (11) 09836-66573

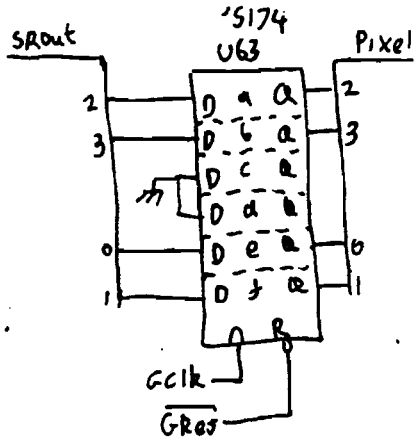

Pixel Latch

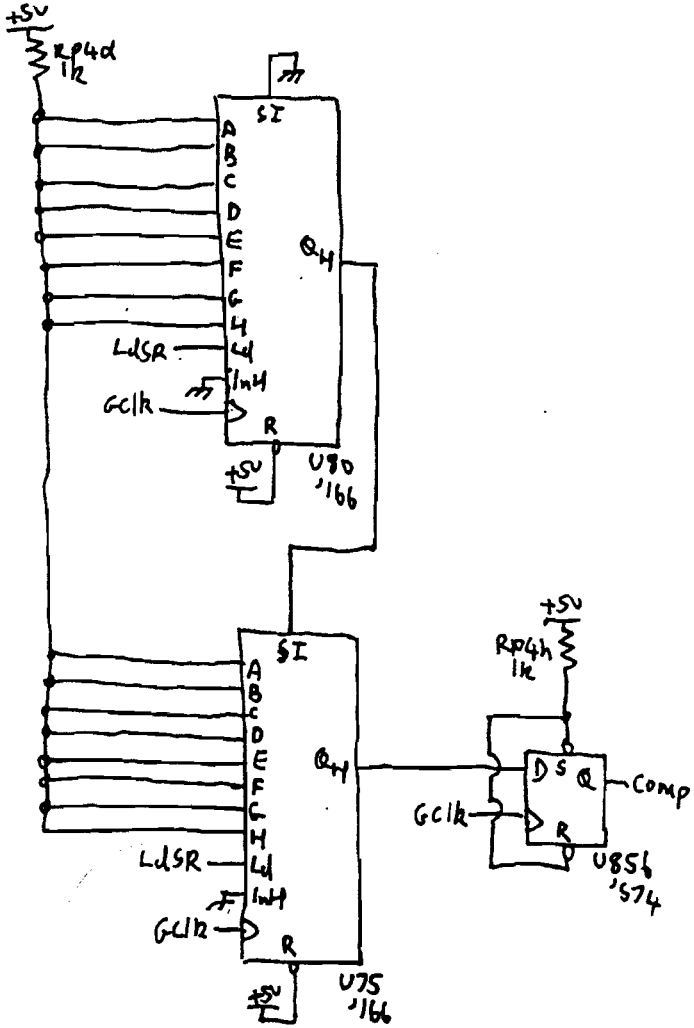

DAC Compensation

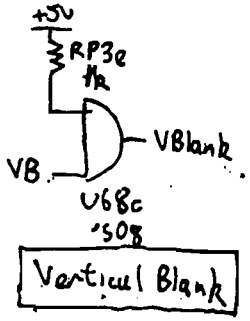

Vertical Blank

HP9836C Graphics PCB Sheet 12

09836-66573

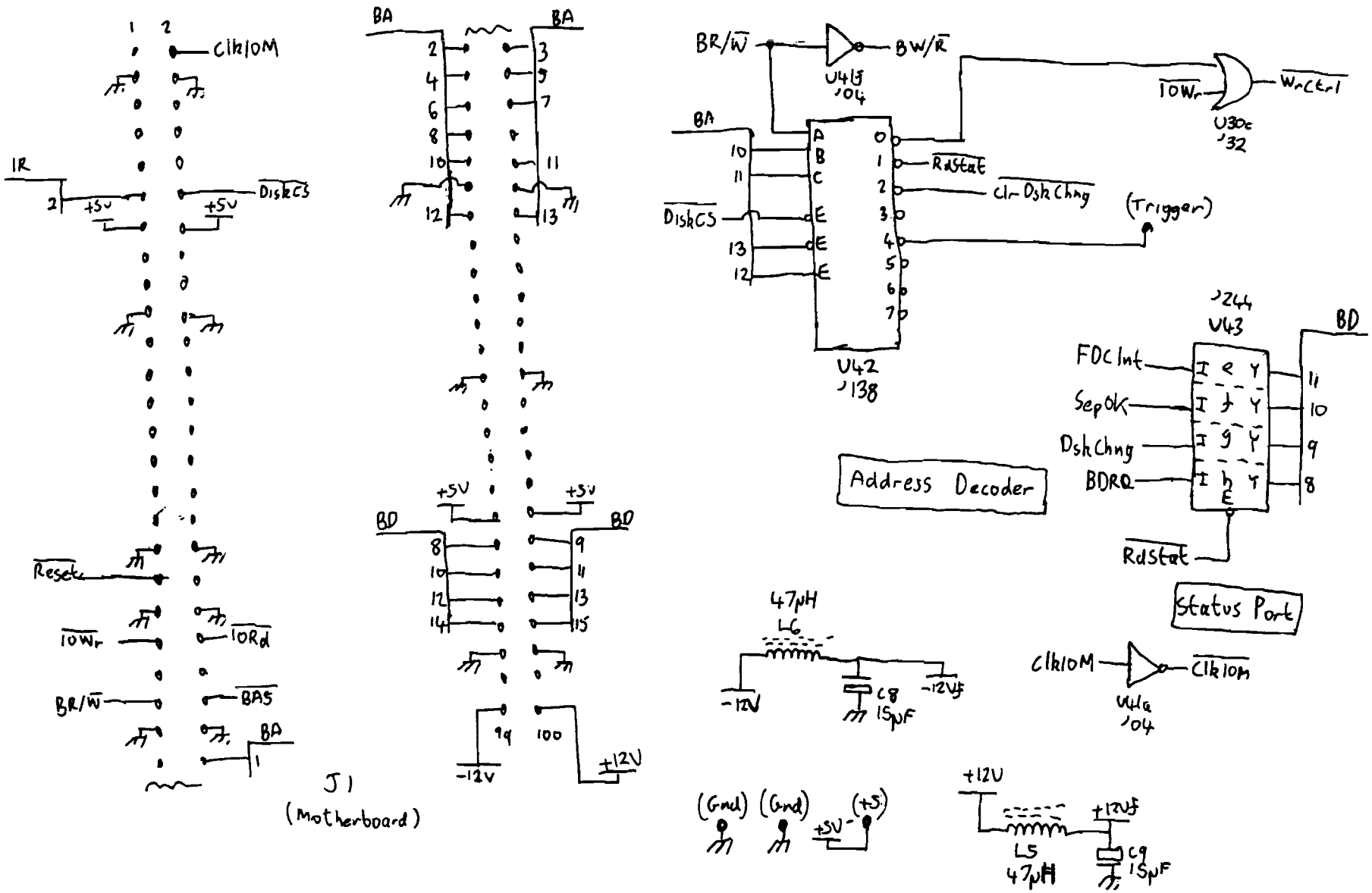

HP9826/HP9836 Floppy Controller PCB Sheet 1 (Bu/R) 09826-66562

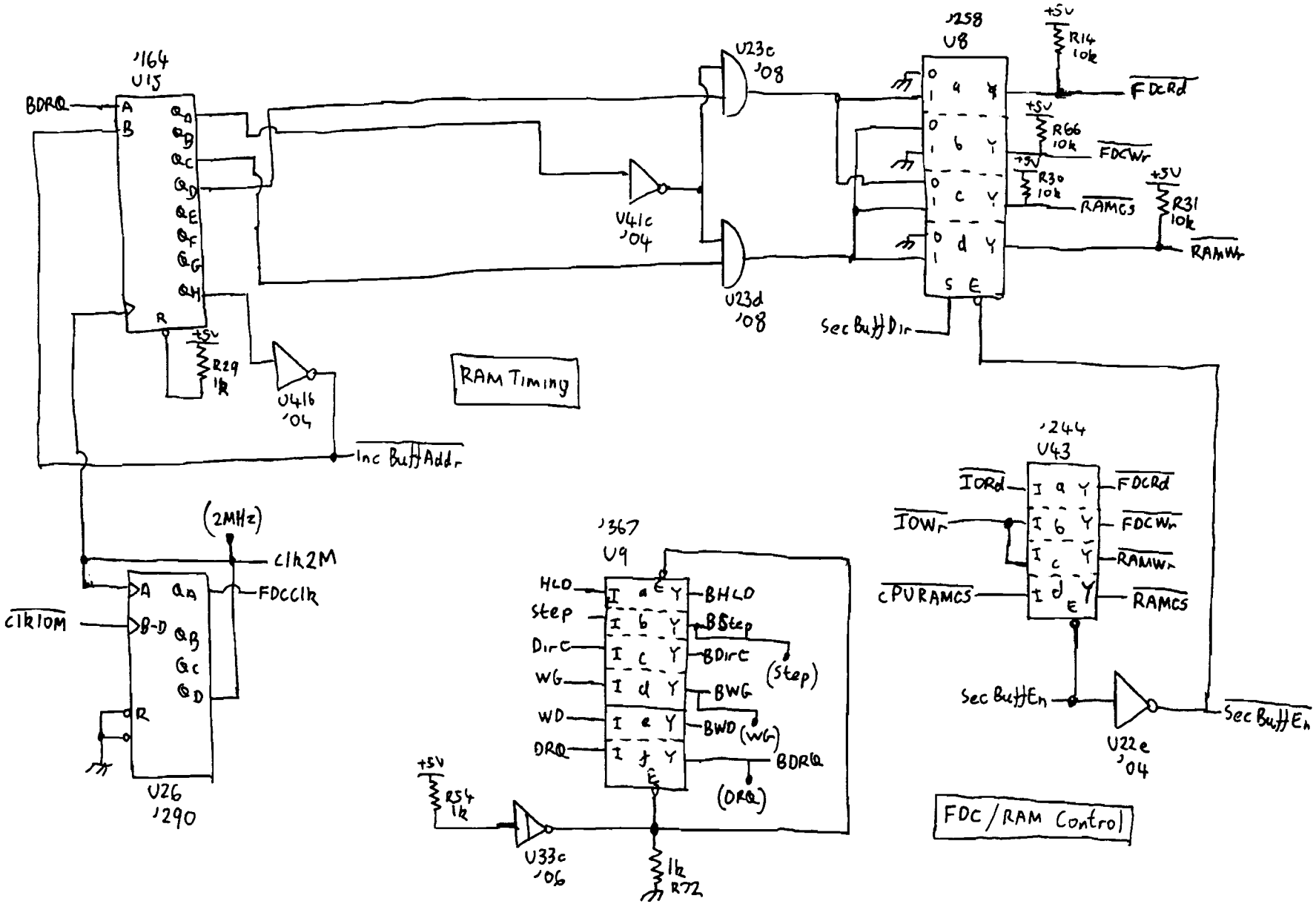

HP9826/HP9836 Floppy Controller PCB Sheet 2 (Bu/R) 09826-66562

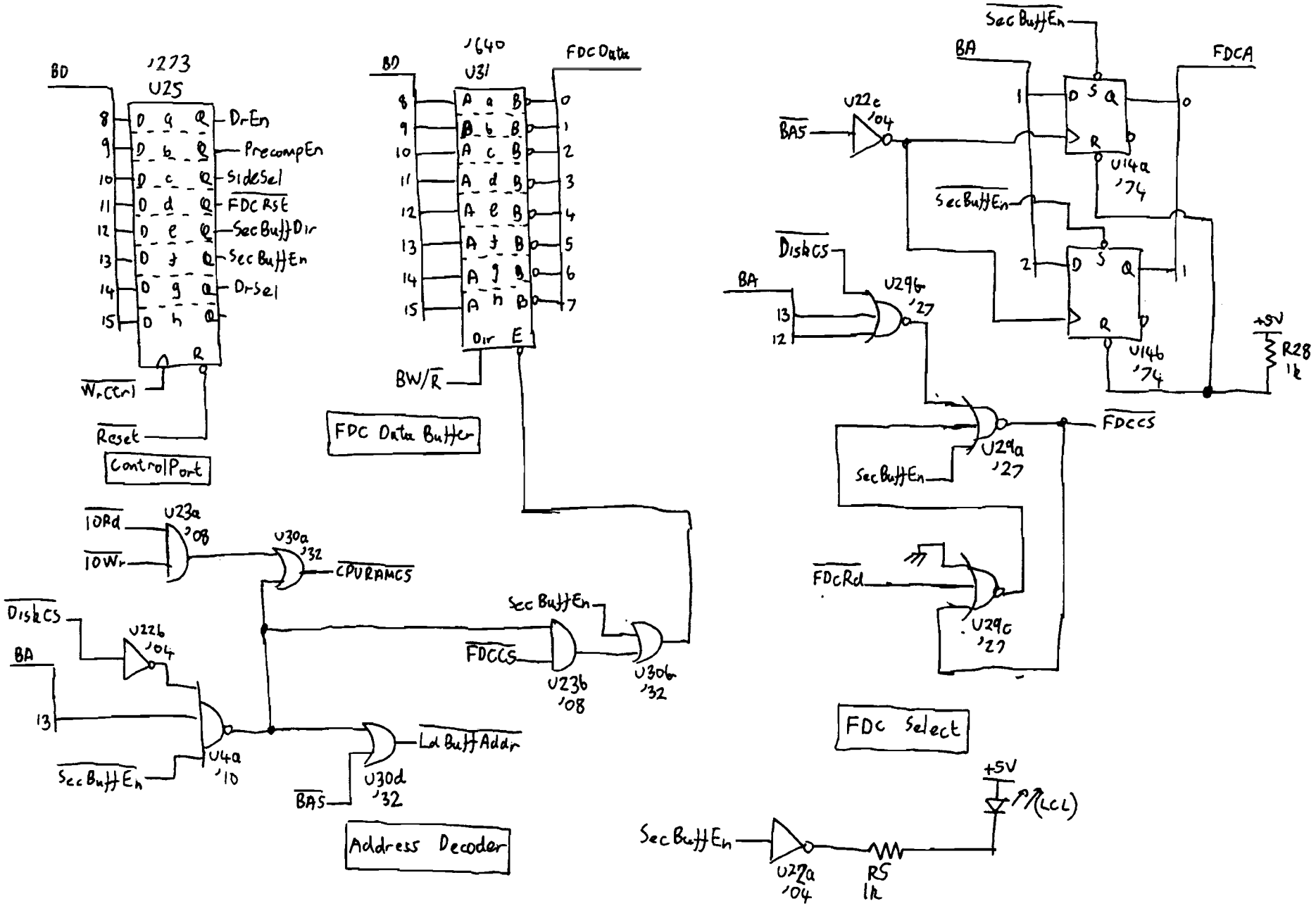

HP9826 / HP9836 Floppy Controller PCB Sheet 3 (Bu/R) 09826-66562

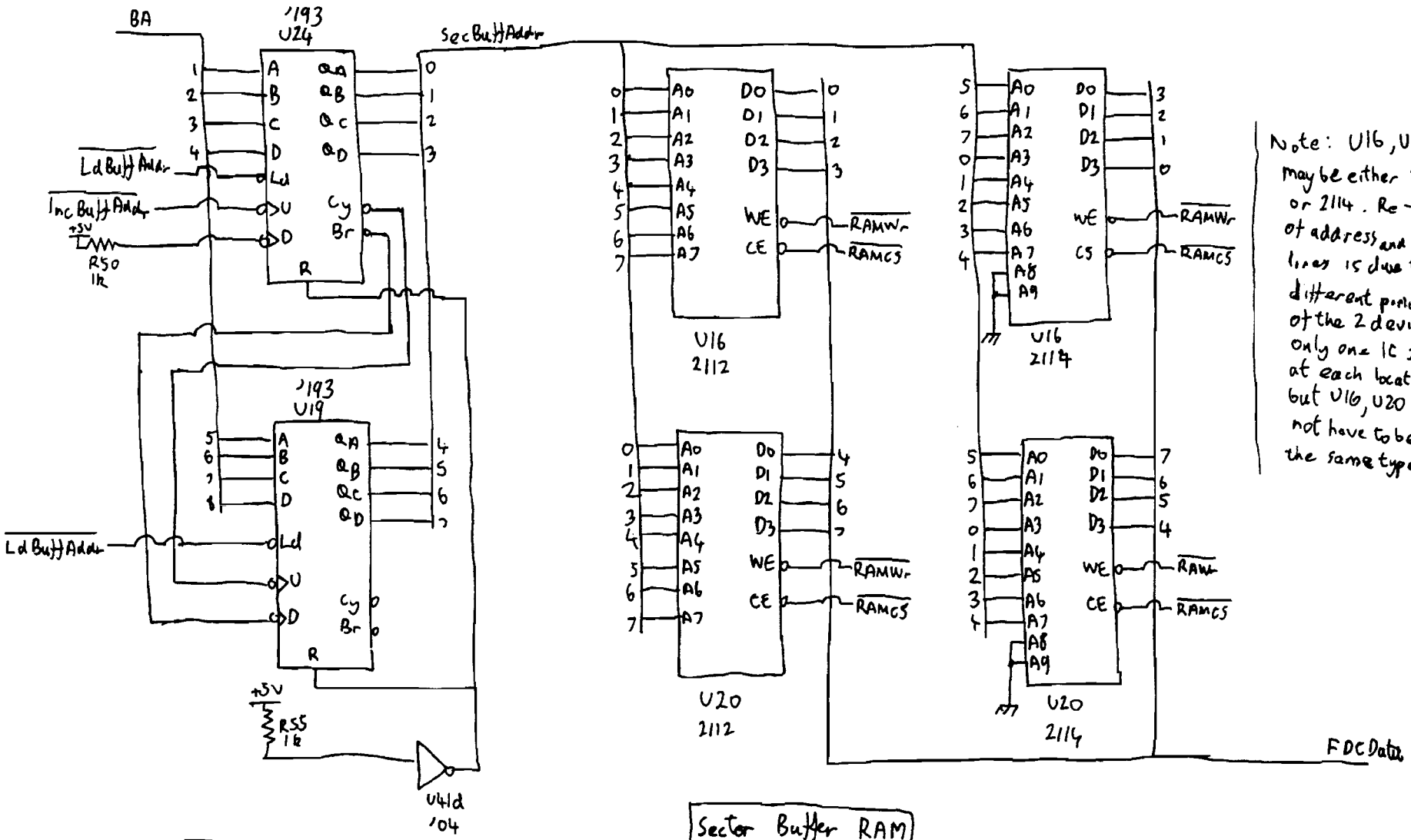

Note: U16, U20 may be either 2112 or 2114. Re-ordering of address and data lines is due to different pinouts of the 2 devices. Only one IC fitted at each location, but U16, U20 do not have to be the same type

RAM Address Counter

Sector Buffer RAM

HP9826 / HP9836 Floppy Controller PCB Sheet (4) (Bu/R) 09826-66562

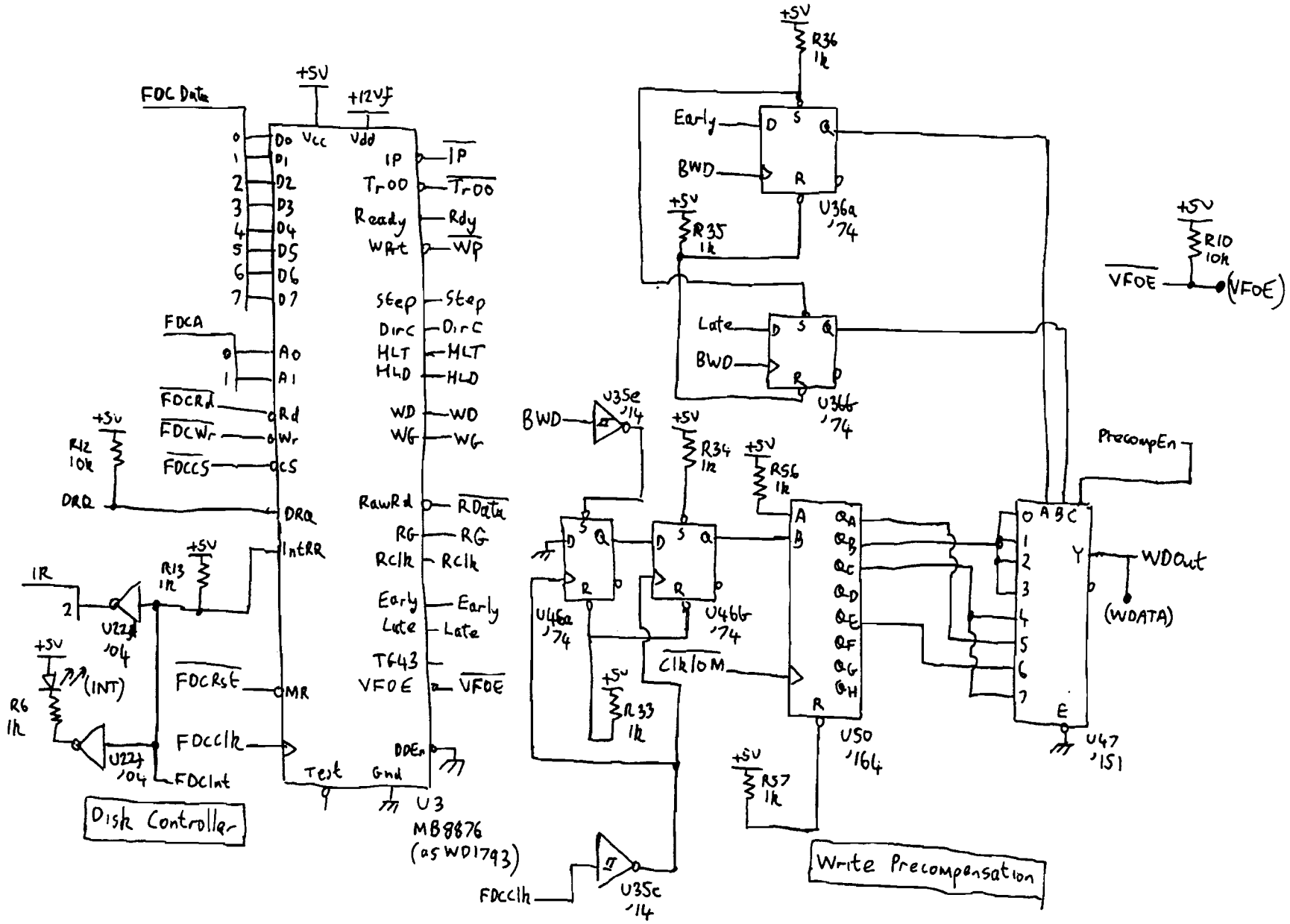

HP9826/HP9836 Floppy Controller PCB Sheet (5) (Bu/R) 09826-66562

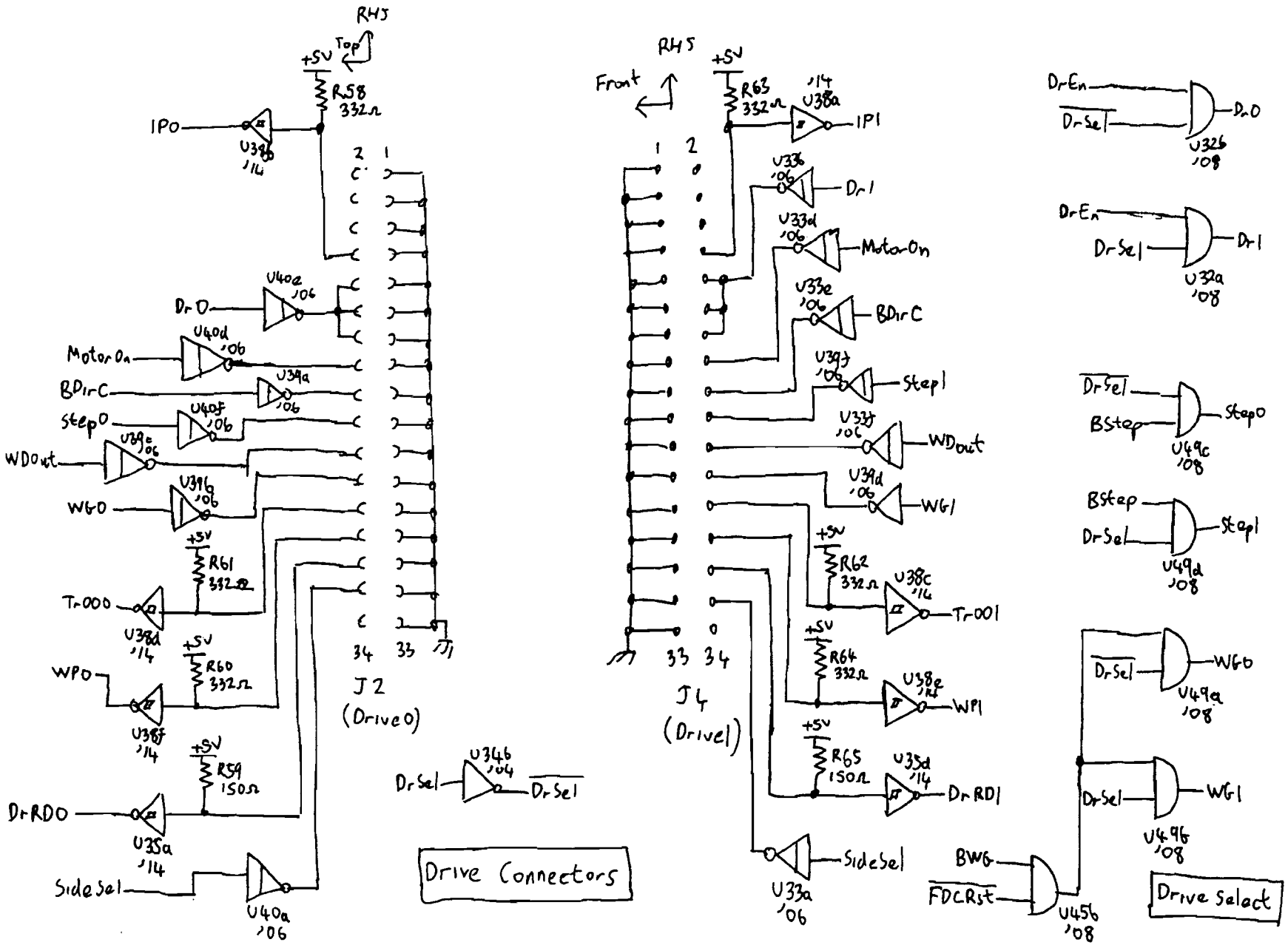

HP9826/HP9836 Floppy Controller PCB Sheet 6 (Bu/R) 09826-66562

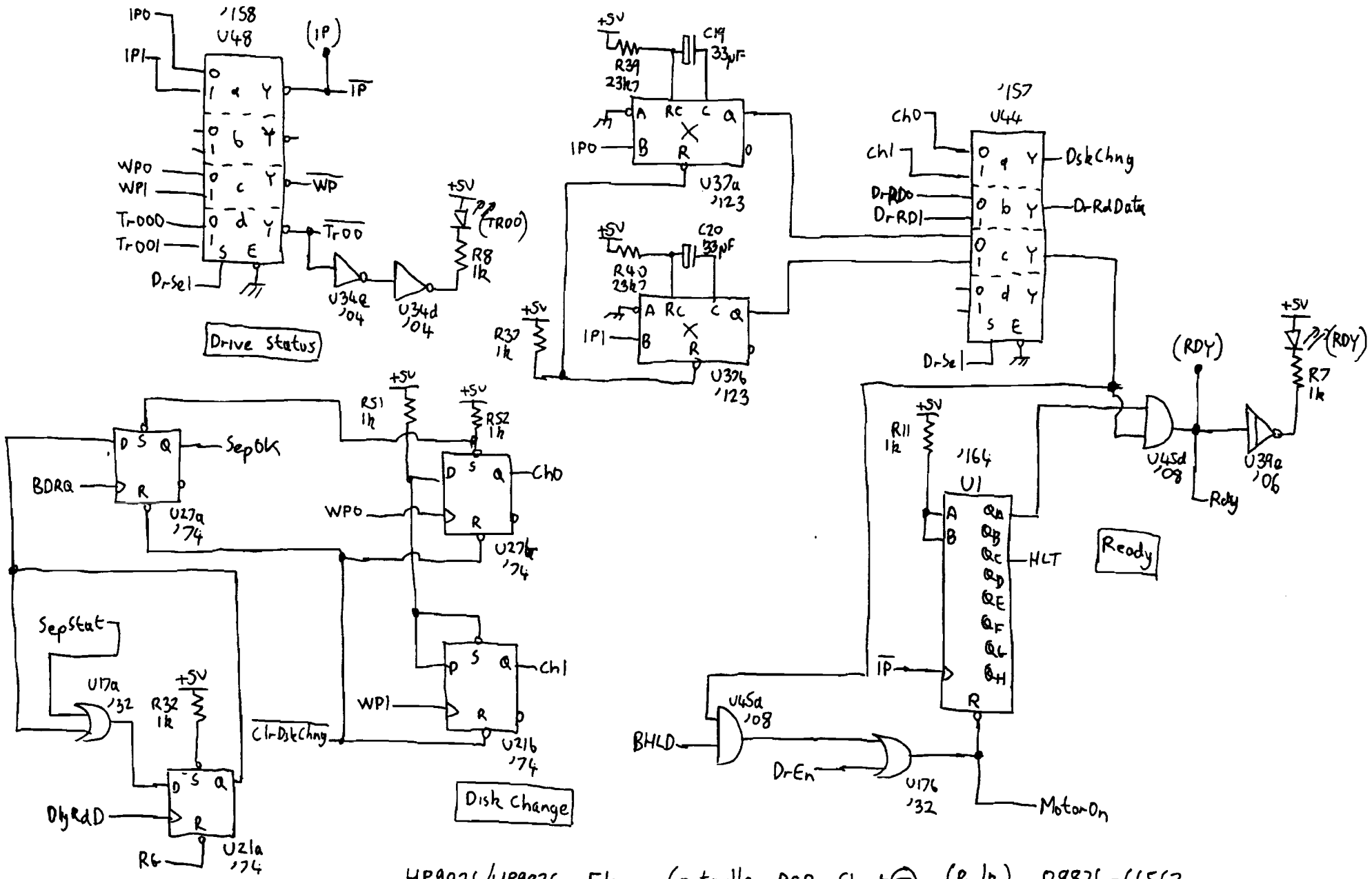

HP9826/HP9836 Floppy Controller PCB Sheet 7 (Bu/R) 09826-66562

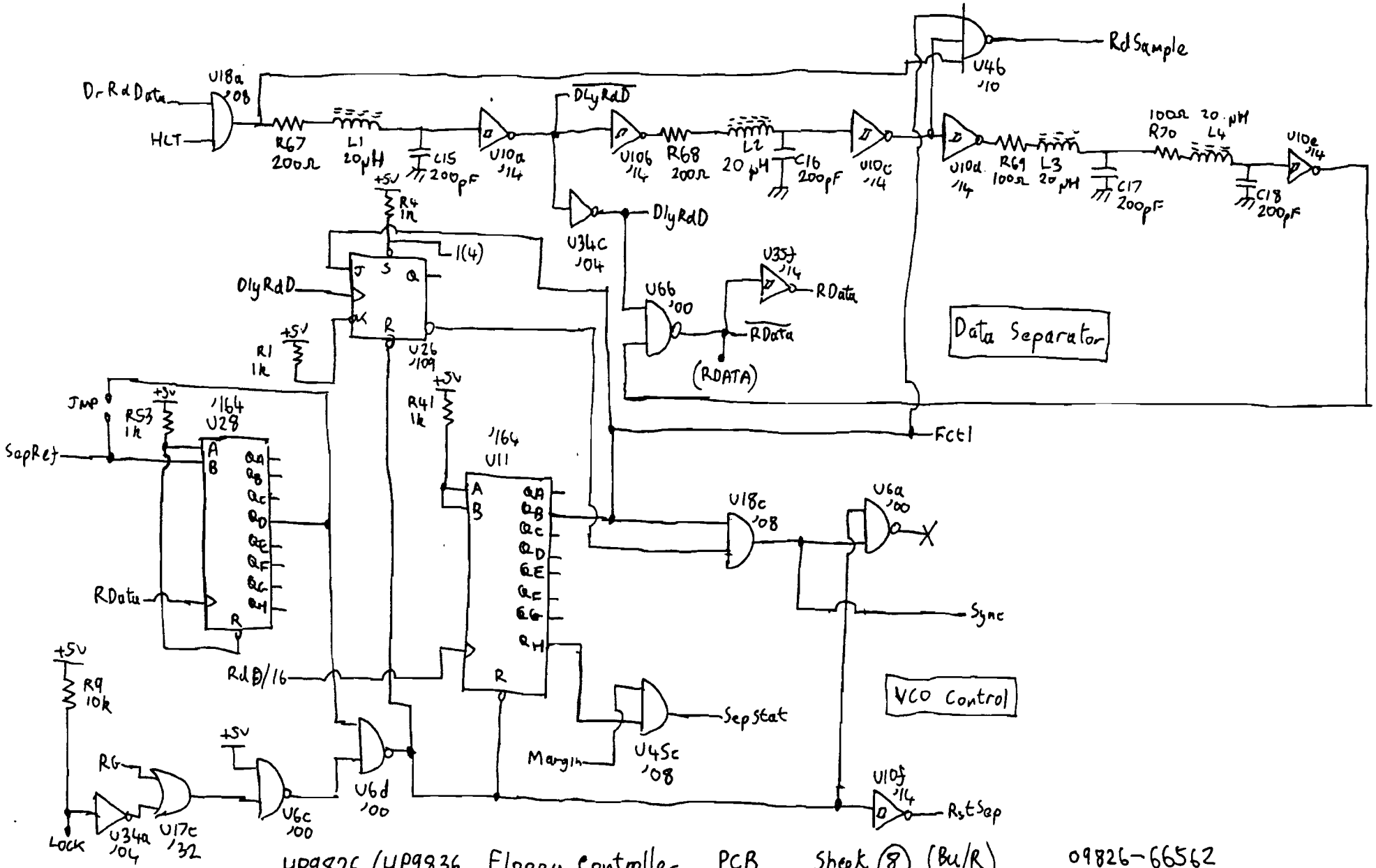

HP9826/HP9836 Floppy Controller PCB Sheet (8) (Bu/R) 09826-66562

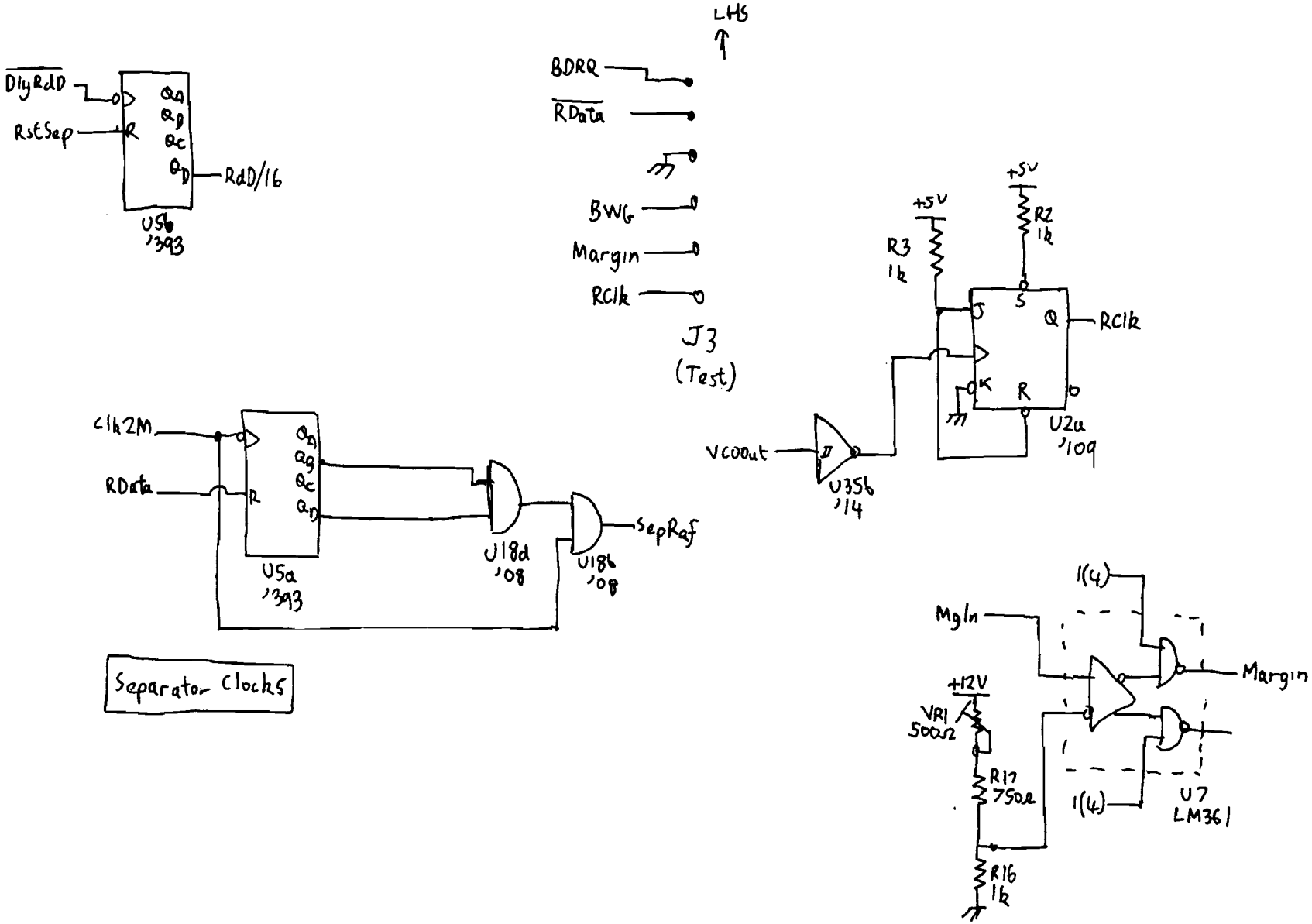

HP9826/HP9836 Floppy Controller PCB Sheet 9 (Bu/R) 09826-66562

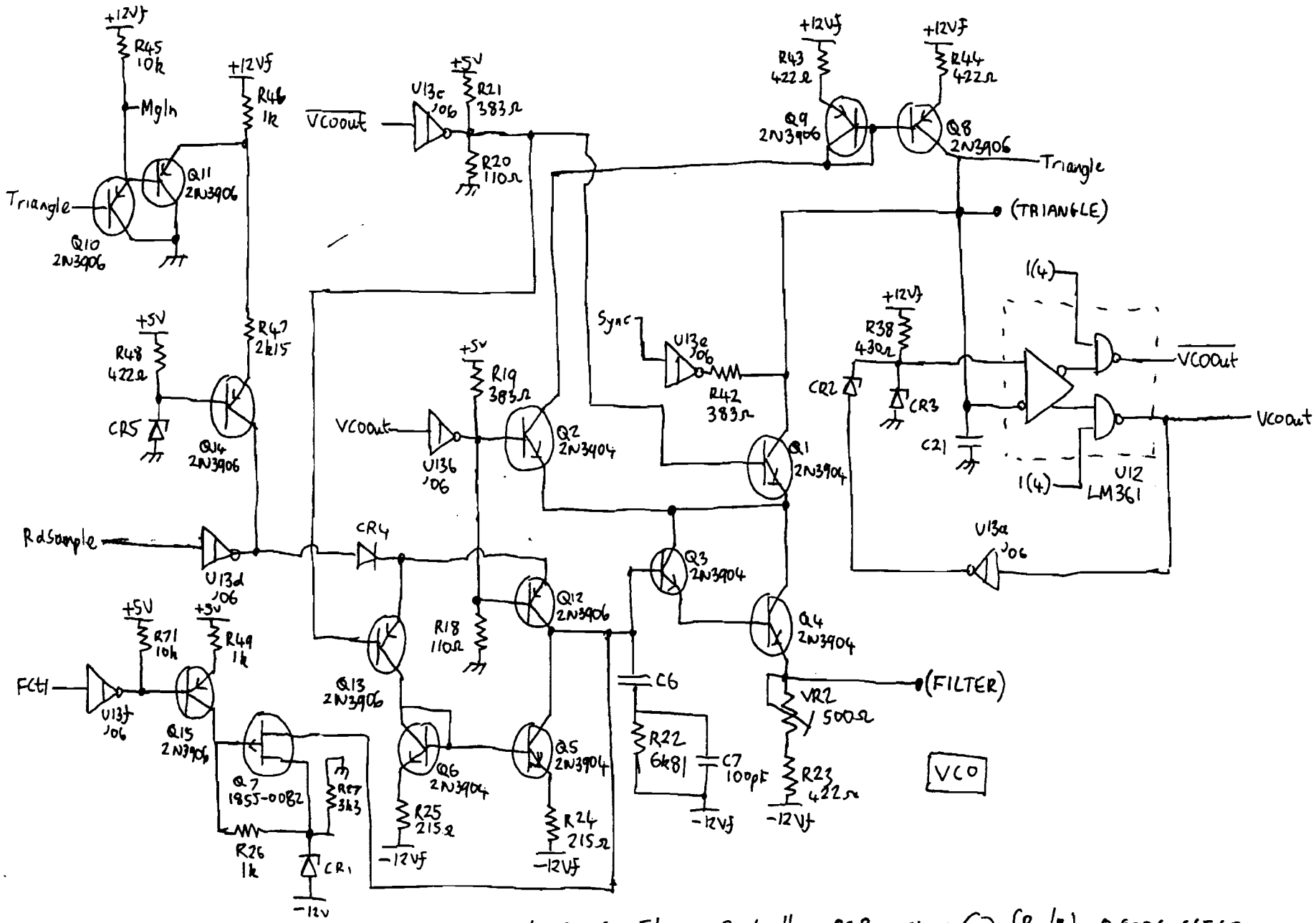

HP9826/HP9836 Floppy Controller PCB Sheet (10) (Bu/R) 09826-66562

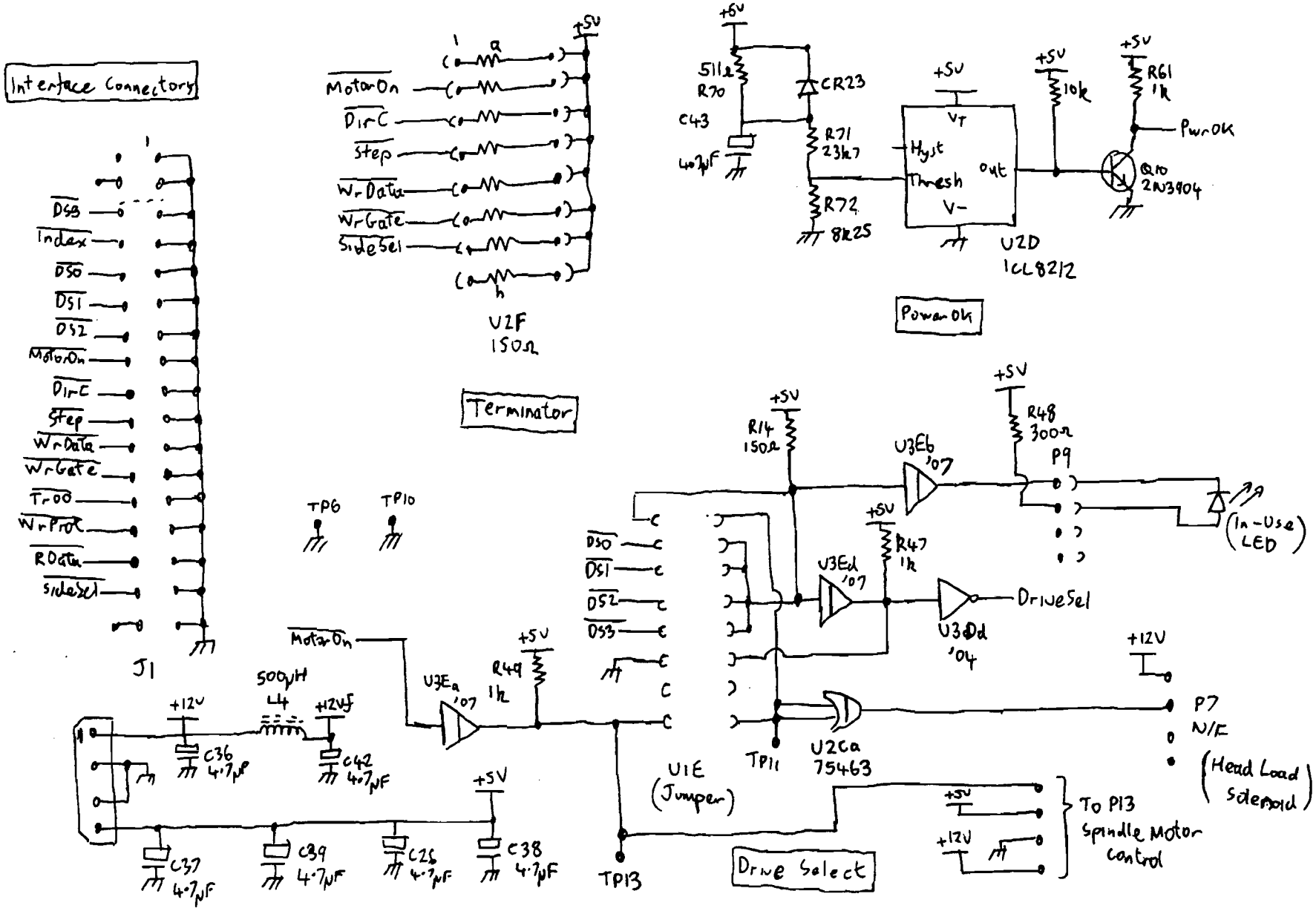

HP9130 Disk Drive Logic PCB Sheet ①

09130-66501

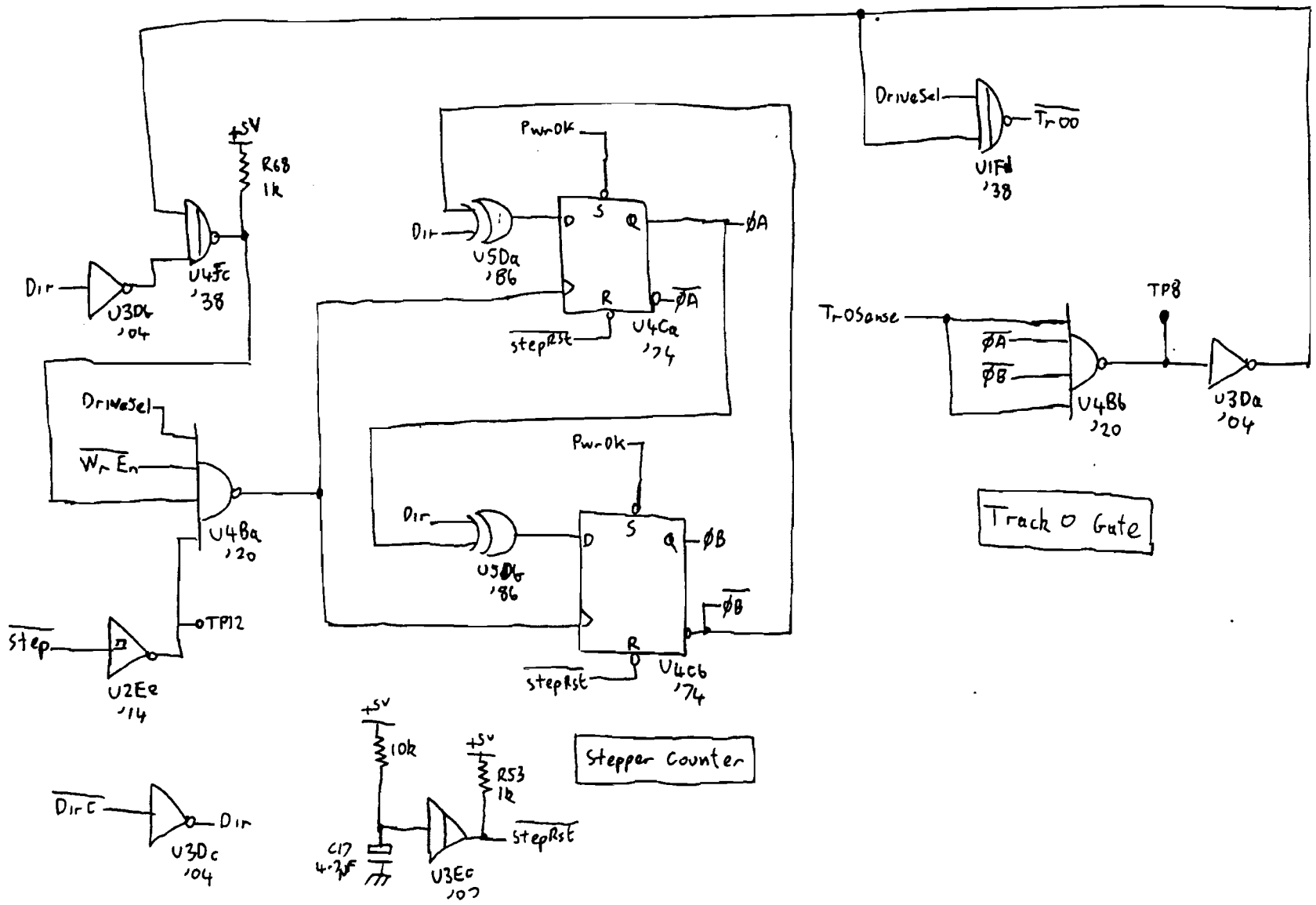

HP 9130 Disk Drive Logic PCB Sheet (2) 09130-66501

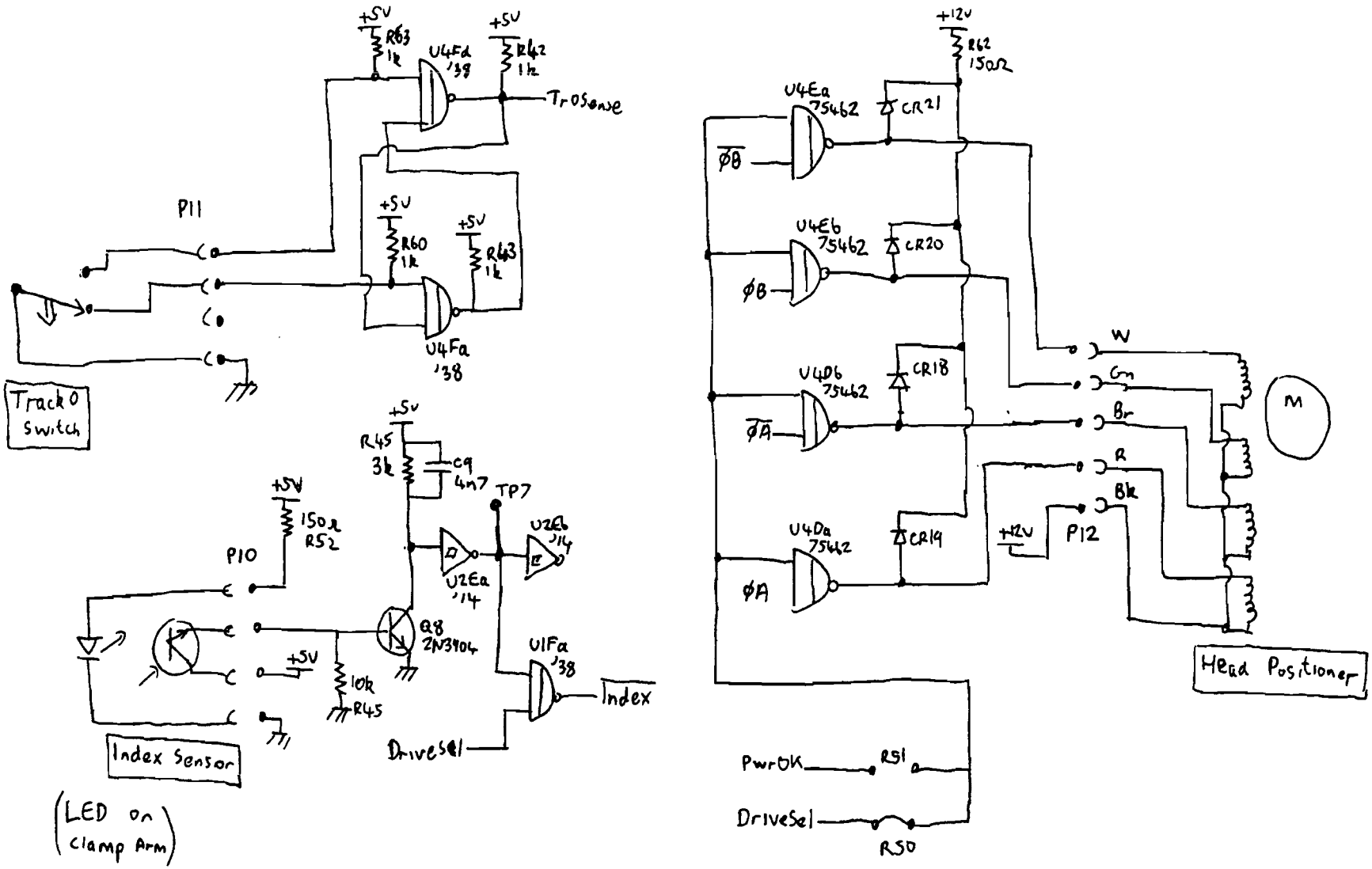

HP9130 Disk Drive Logic PCB Sheet 3 09130-66501

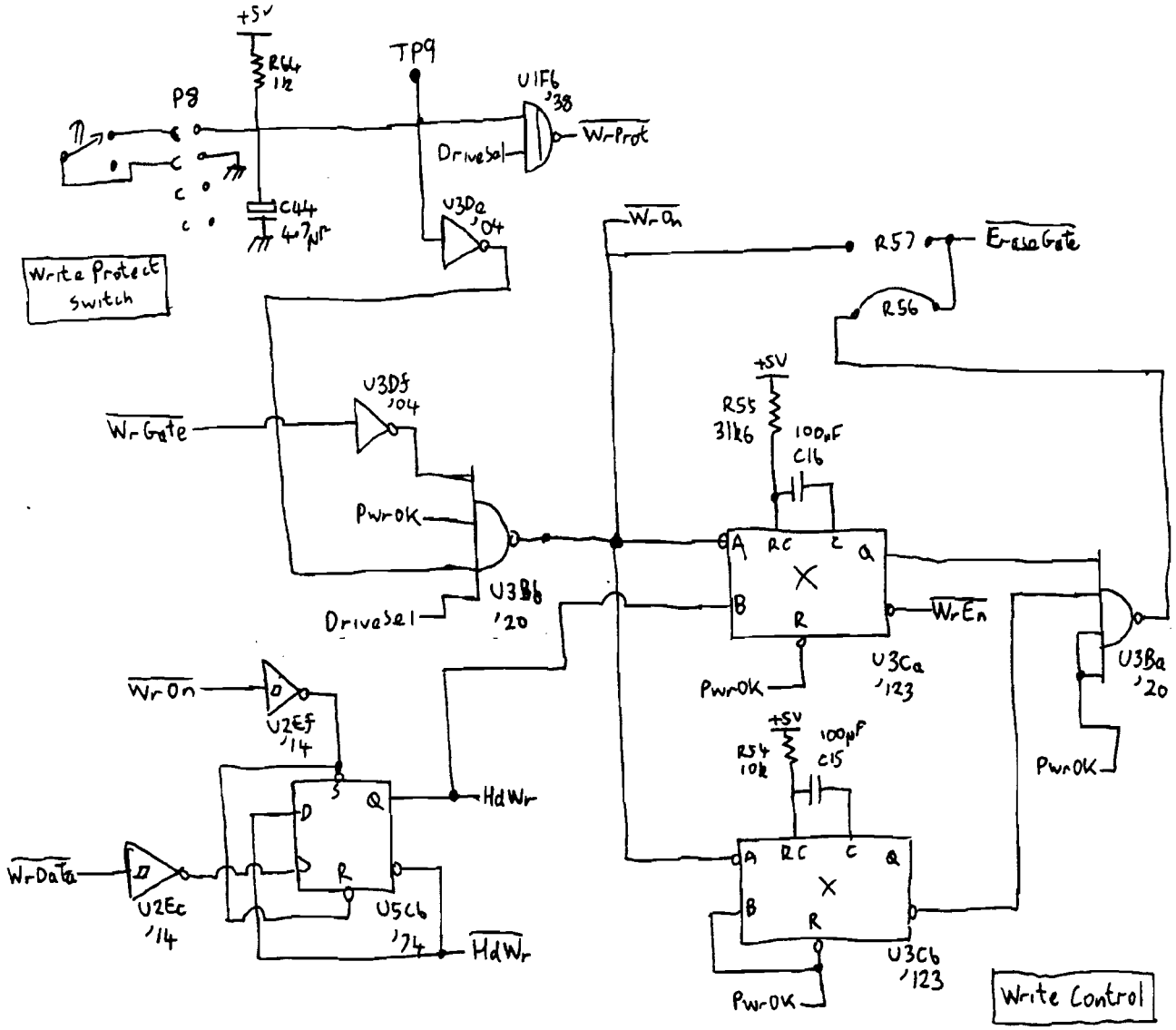

HP9130 Disk Drive Logic PCB Sheet (4) 09130-66501

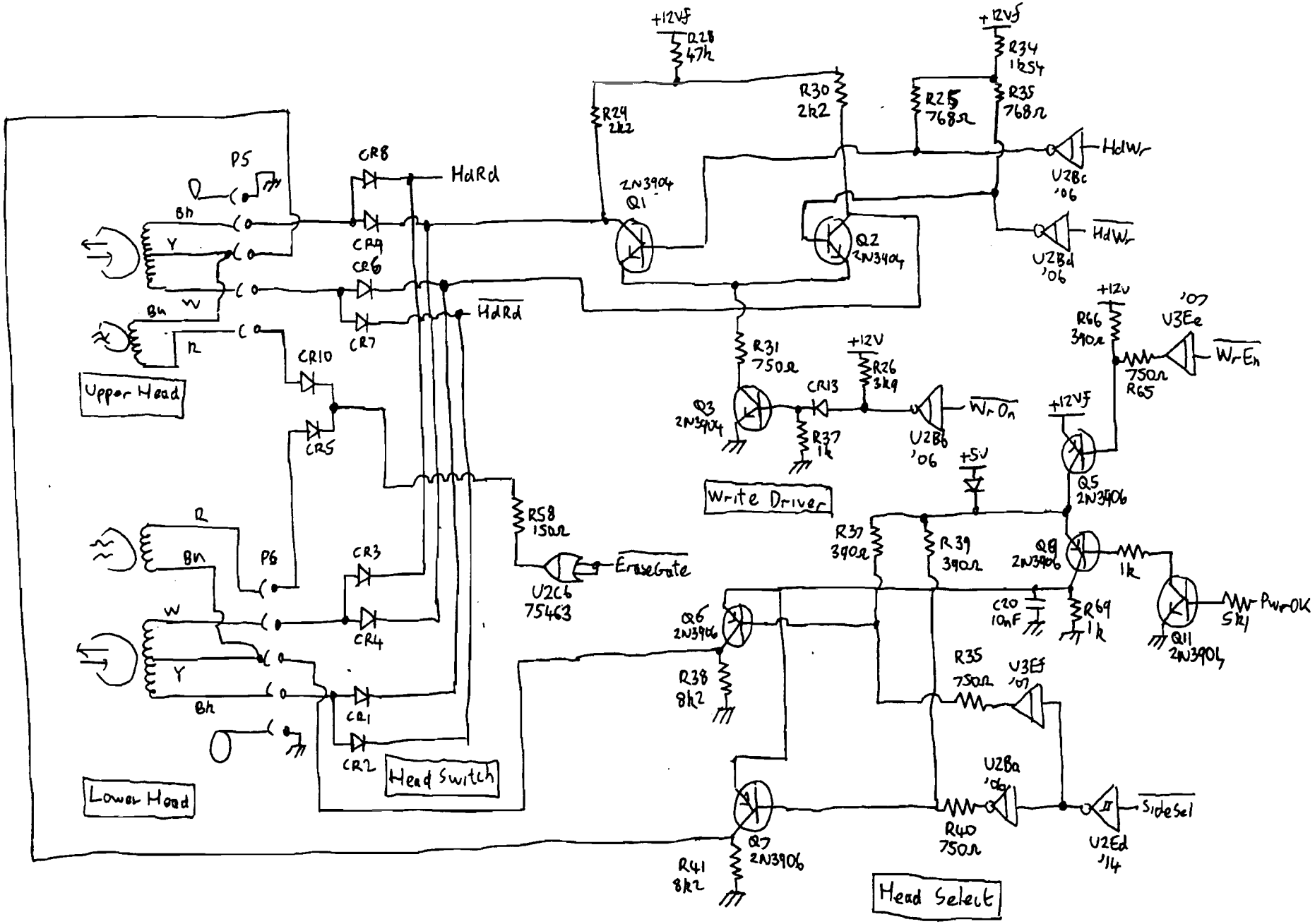

HP9130 Disk Drive Logic PCB Sheet 5 09130-66501

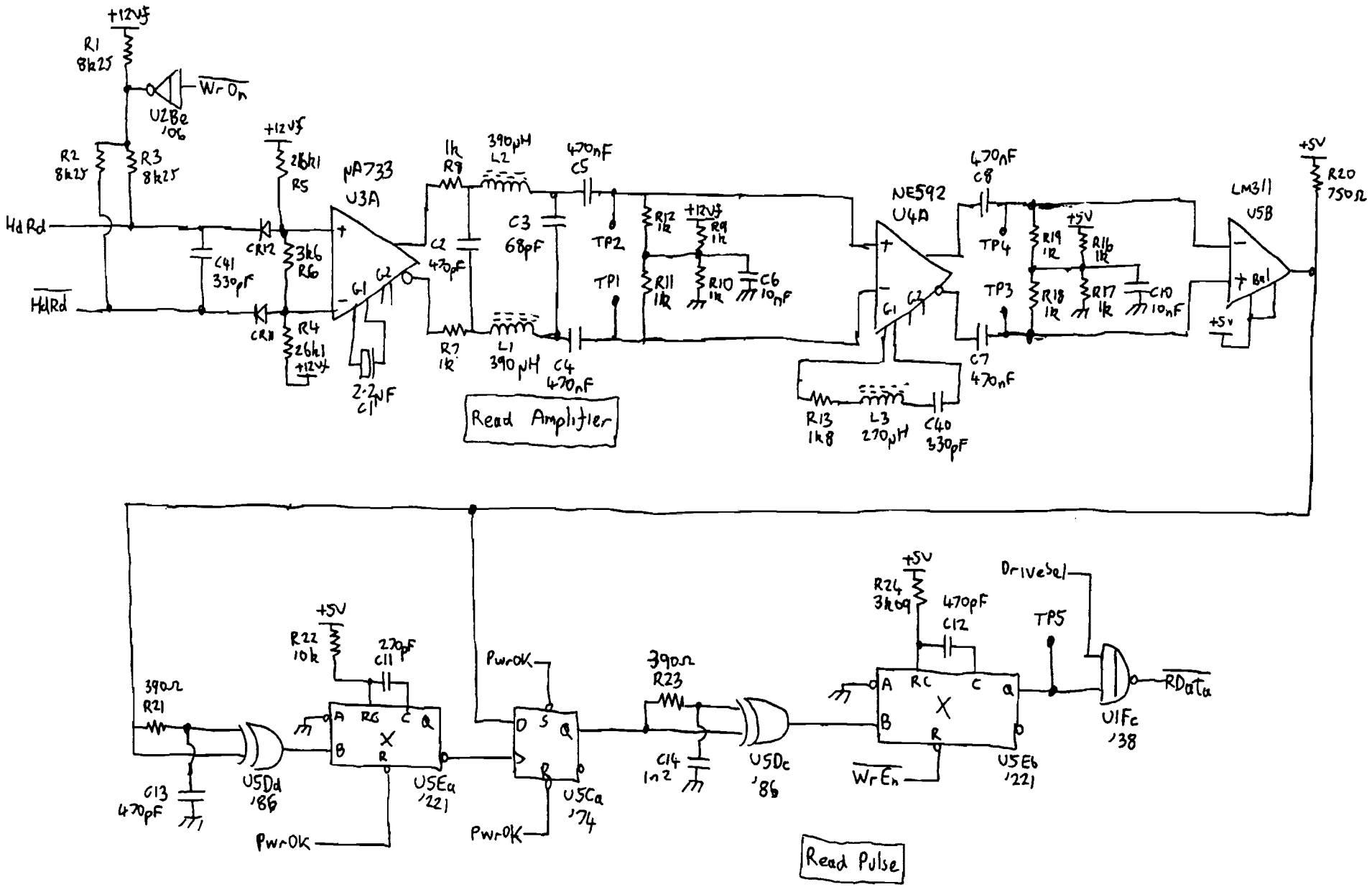

HP9130 Disk Drive Logic PCB Sheet (6) 09130-66501

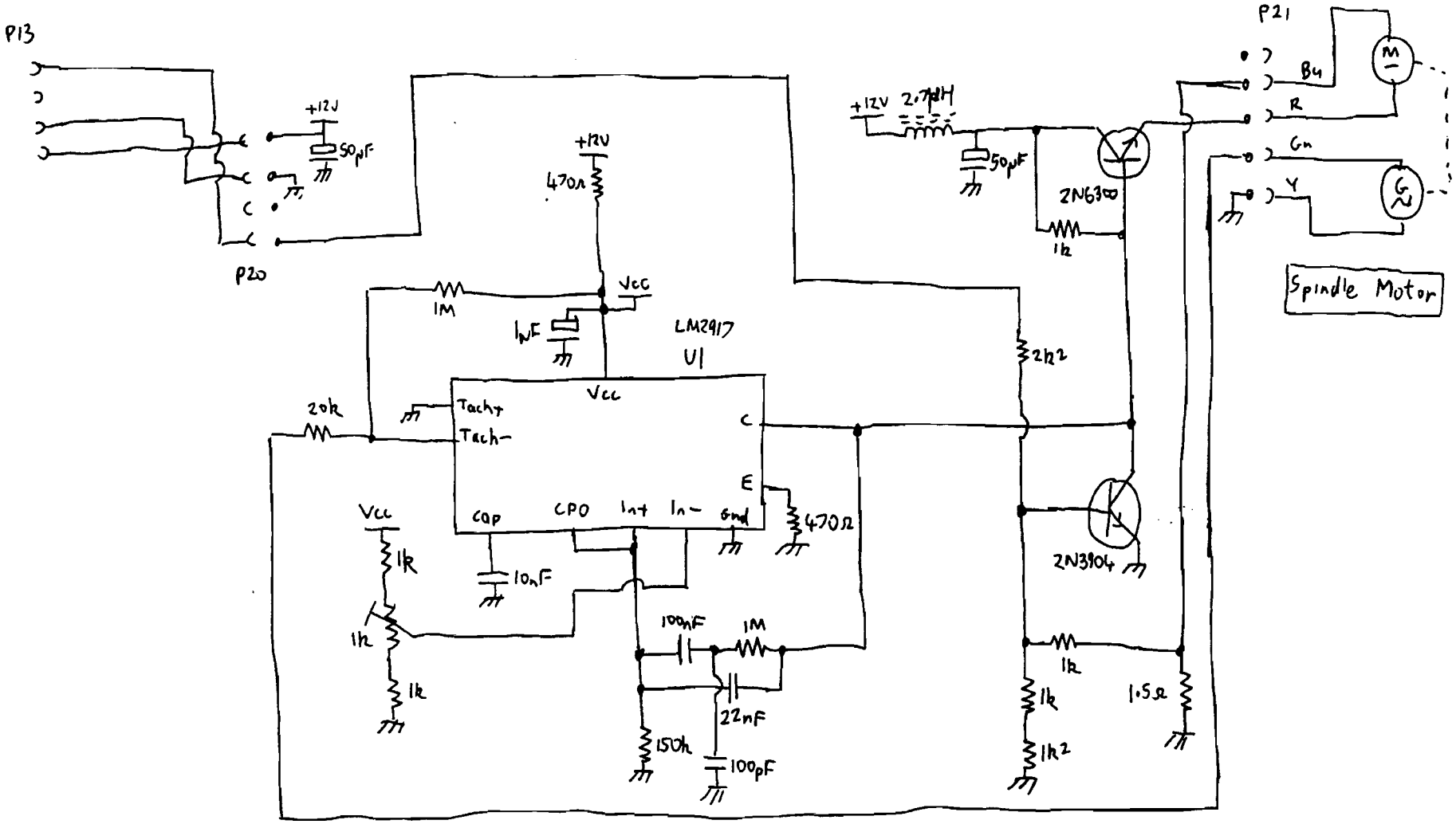

HP9130 Spindle Motor Control PCB 09130-66500

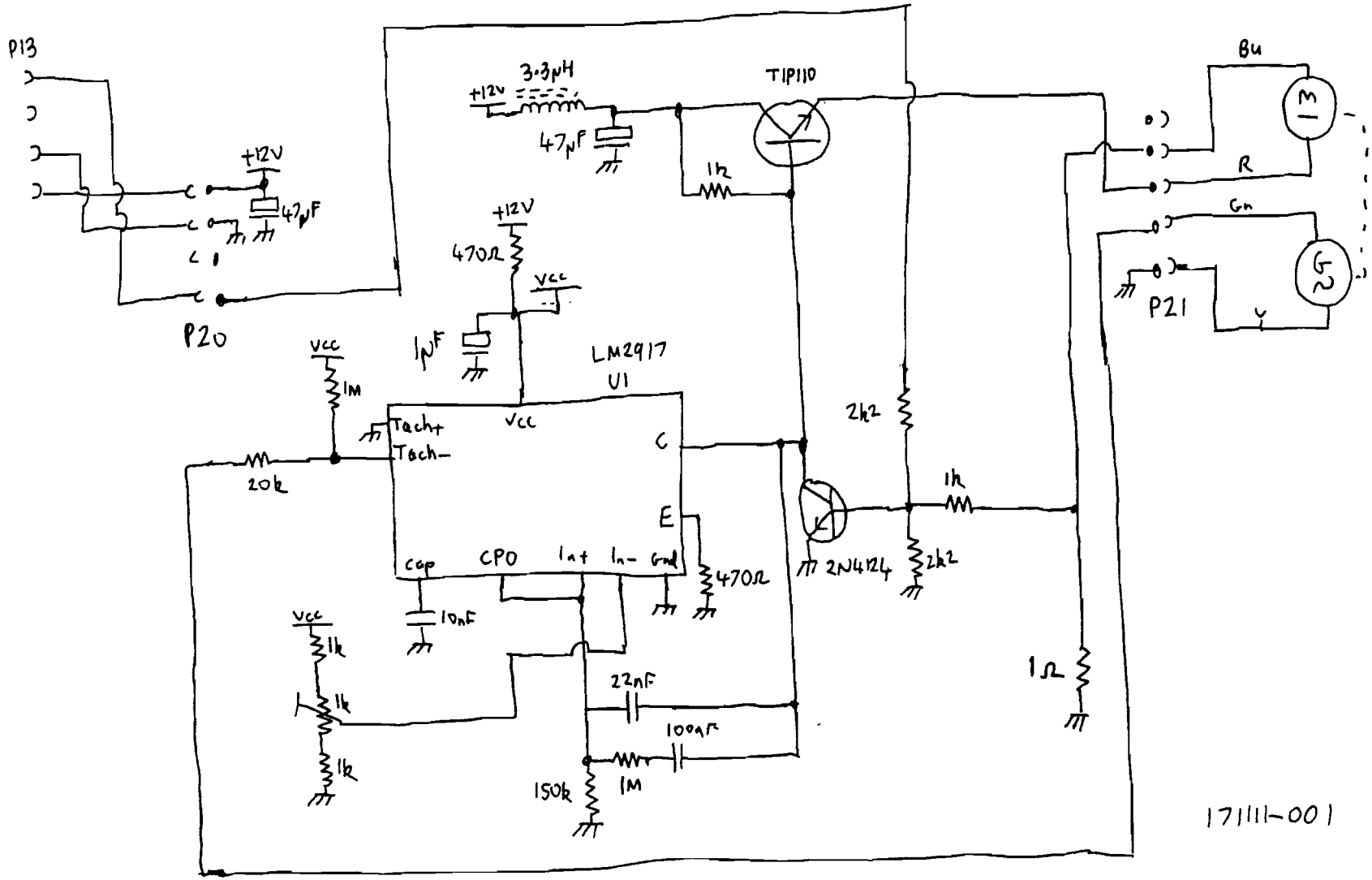

HP9130 Spindle Motor Control PCB

HP9130 (CDC/MPI)

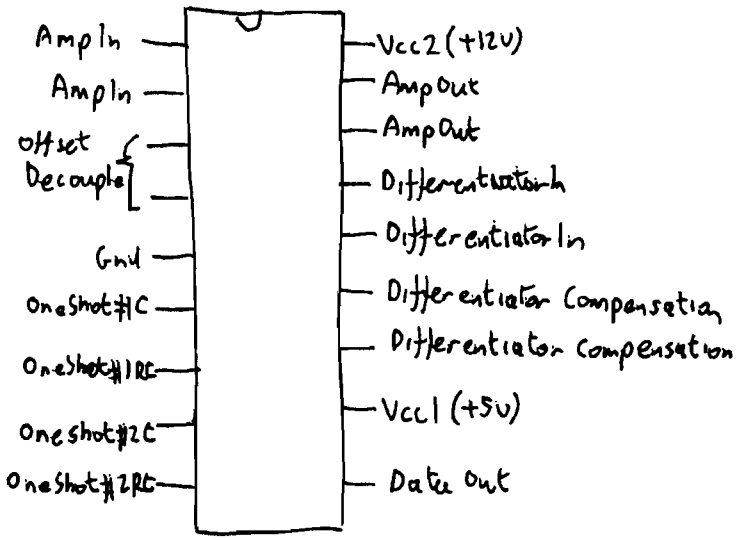

MC3740
Disk Read Chain

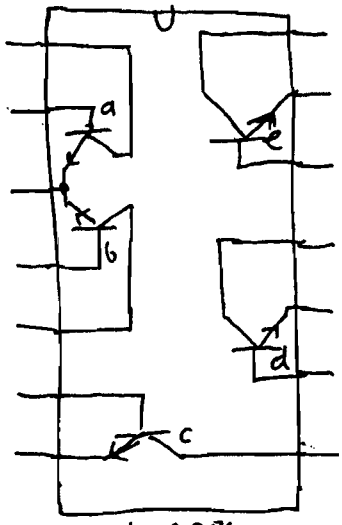

LM3086

Motor Control
M51970L

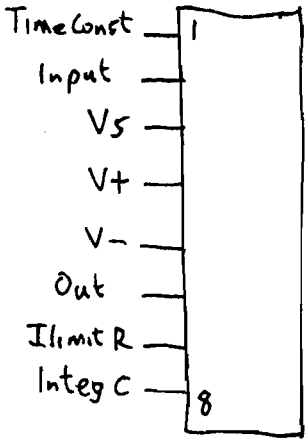

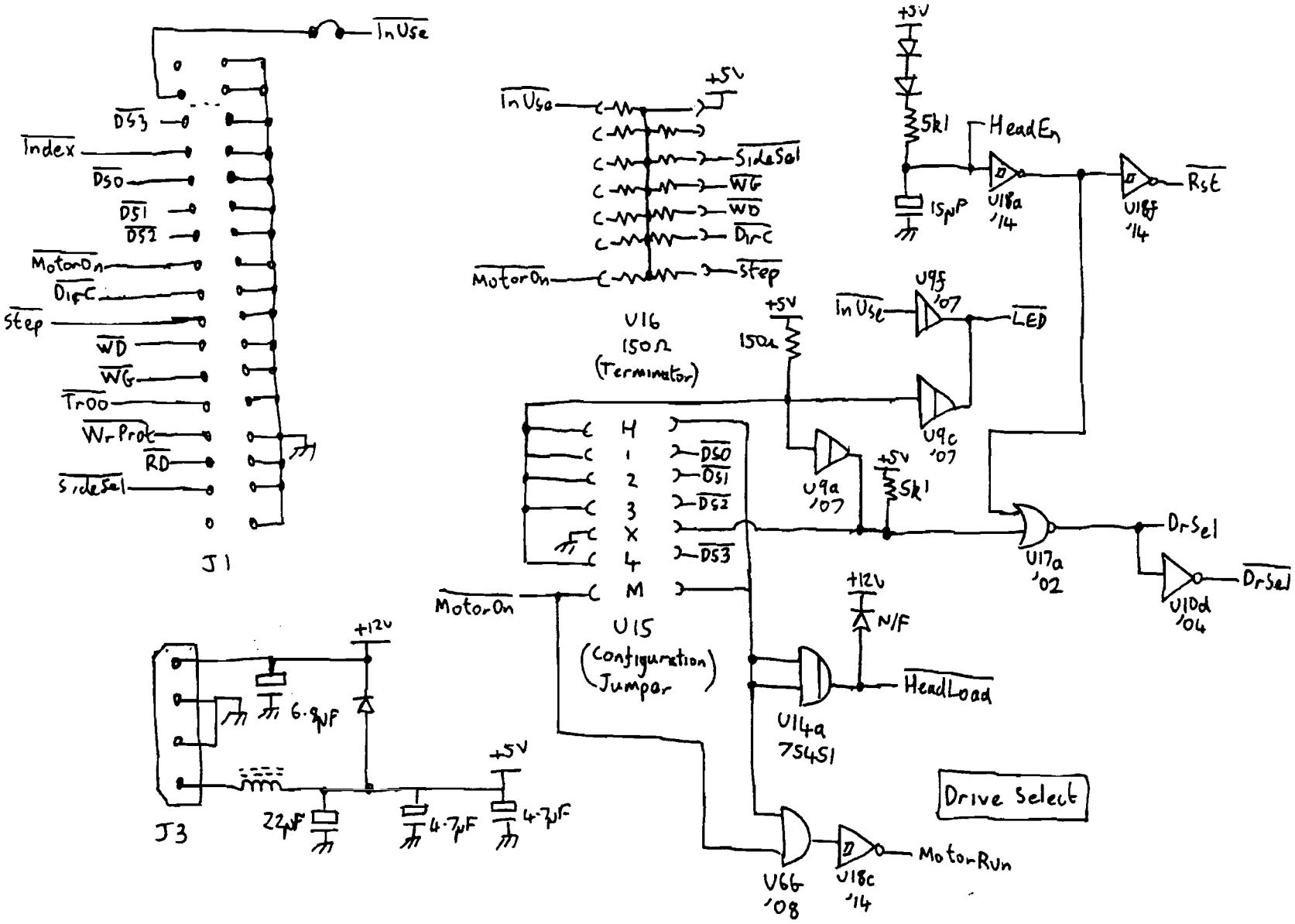
InUse
DS3
Index
DS0
DS1
DS2
MotorOn
DirC
Step
WD
WG
Tr00
WrProt
RD
SideSel
J1
+5V
InUse
SideSel
WG
WD
DirC
MotorOn
Step
U16
150Ω
(Terminator)
+5V
5k1
HeadEn
15μF
U18a
'14
U18f
'14
Rst
U9f
'07
InUse
LED
+5V
150Ω
U9c
'07
H
1
2
3
X
4
M
DS0
DS1
DS2
DS3
U9a
'07
+5V
5k1
U17a
'02
DrSel
U10d
'04
DrSel
MotorOn
U15
(Configuration Jumper)
+12V
N/F
HeadLoad
U14a
75451
+12V
6.8μF
+5V
J3
22μF
4.7μF
4.7μF
Drive Select
U6b
'08
U18c
'14
MotorRun

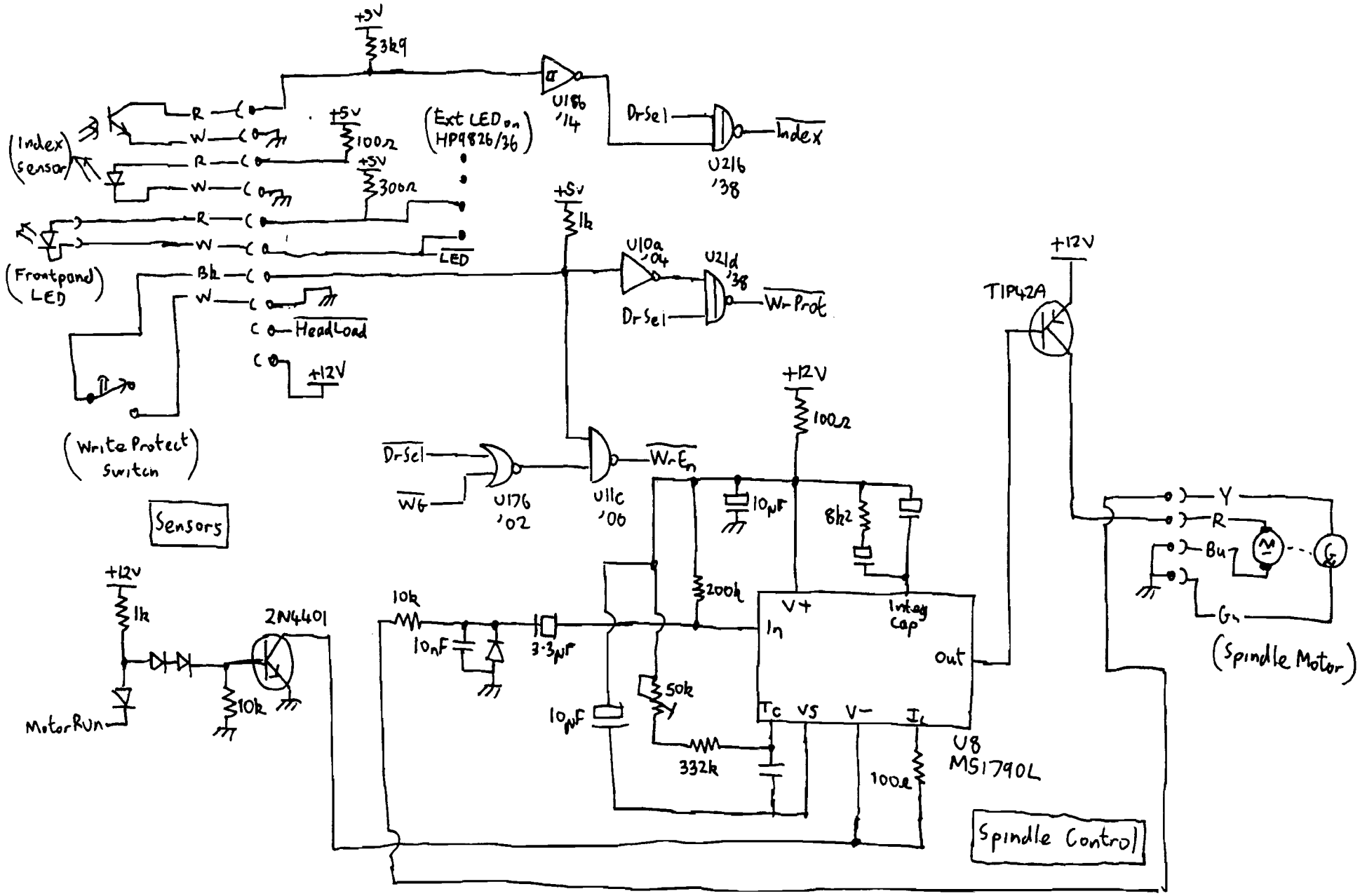

HP9130 (CDC /MPI) Sheet 2

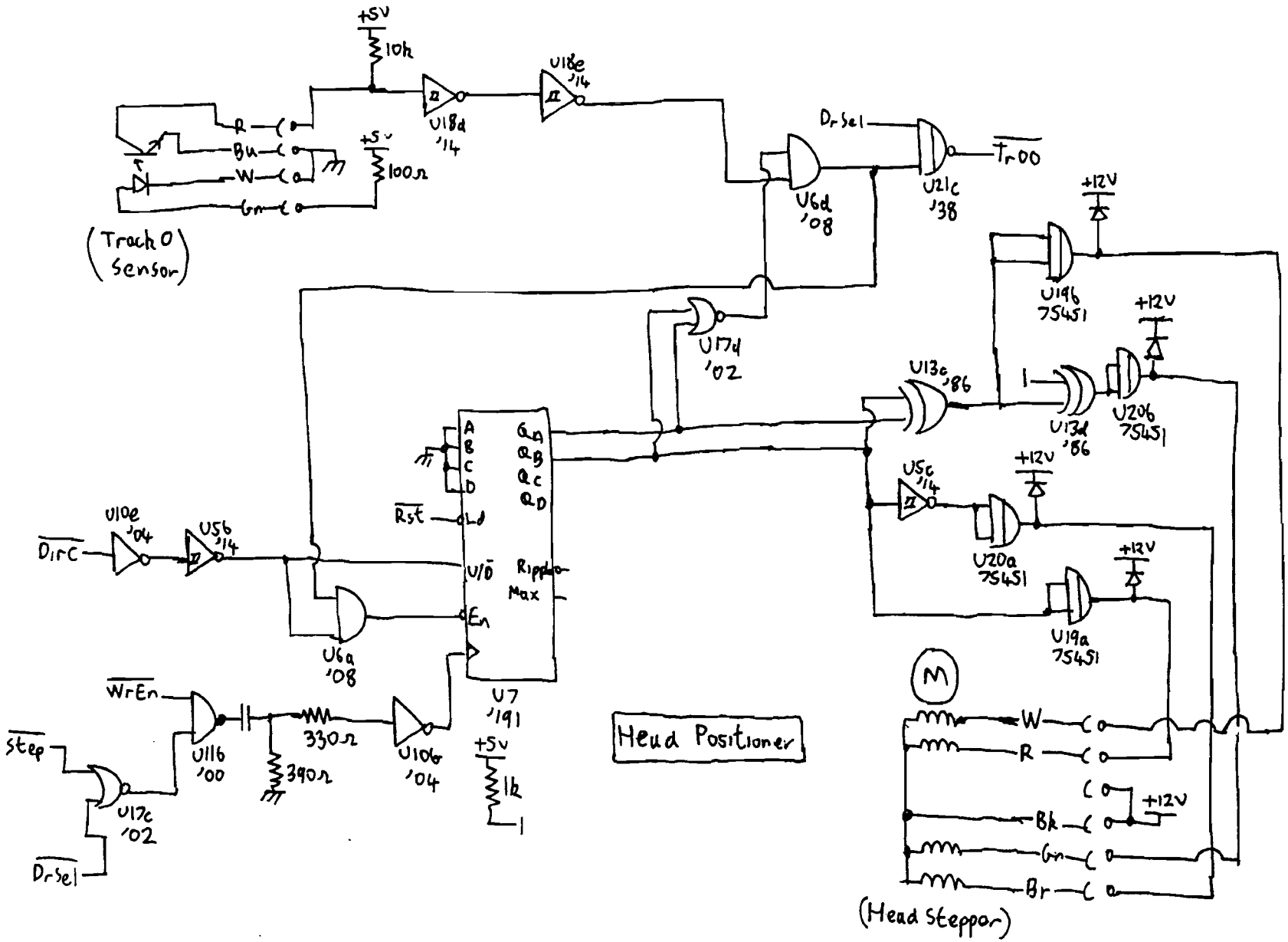

HP9130 (CDC/MPI) Sheet (3)

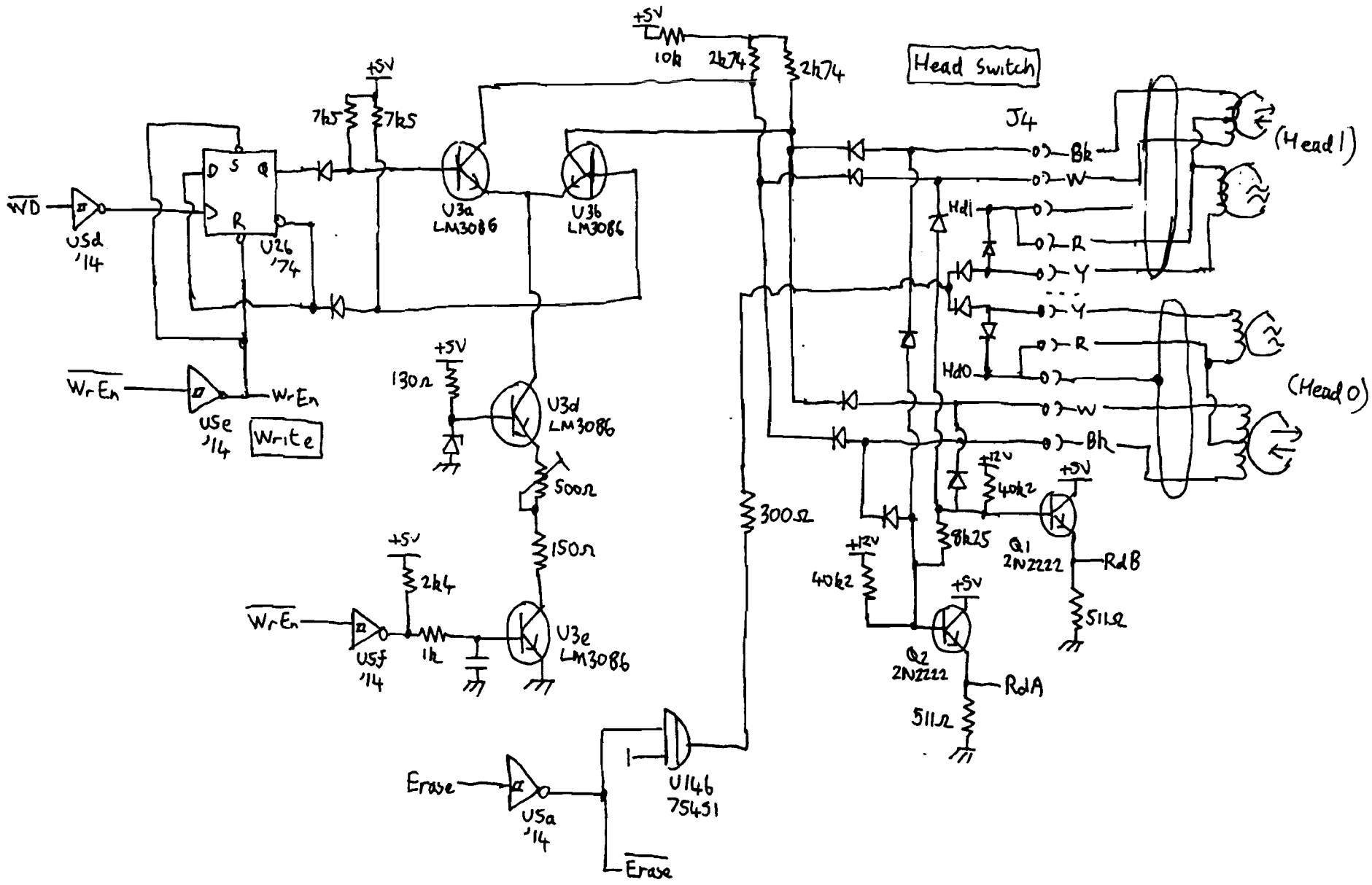

HP9130 (CDC/MPI) Sheet 4

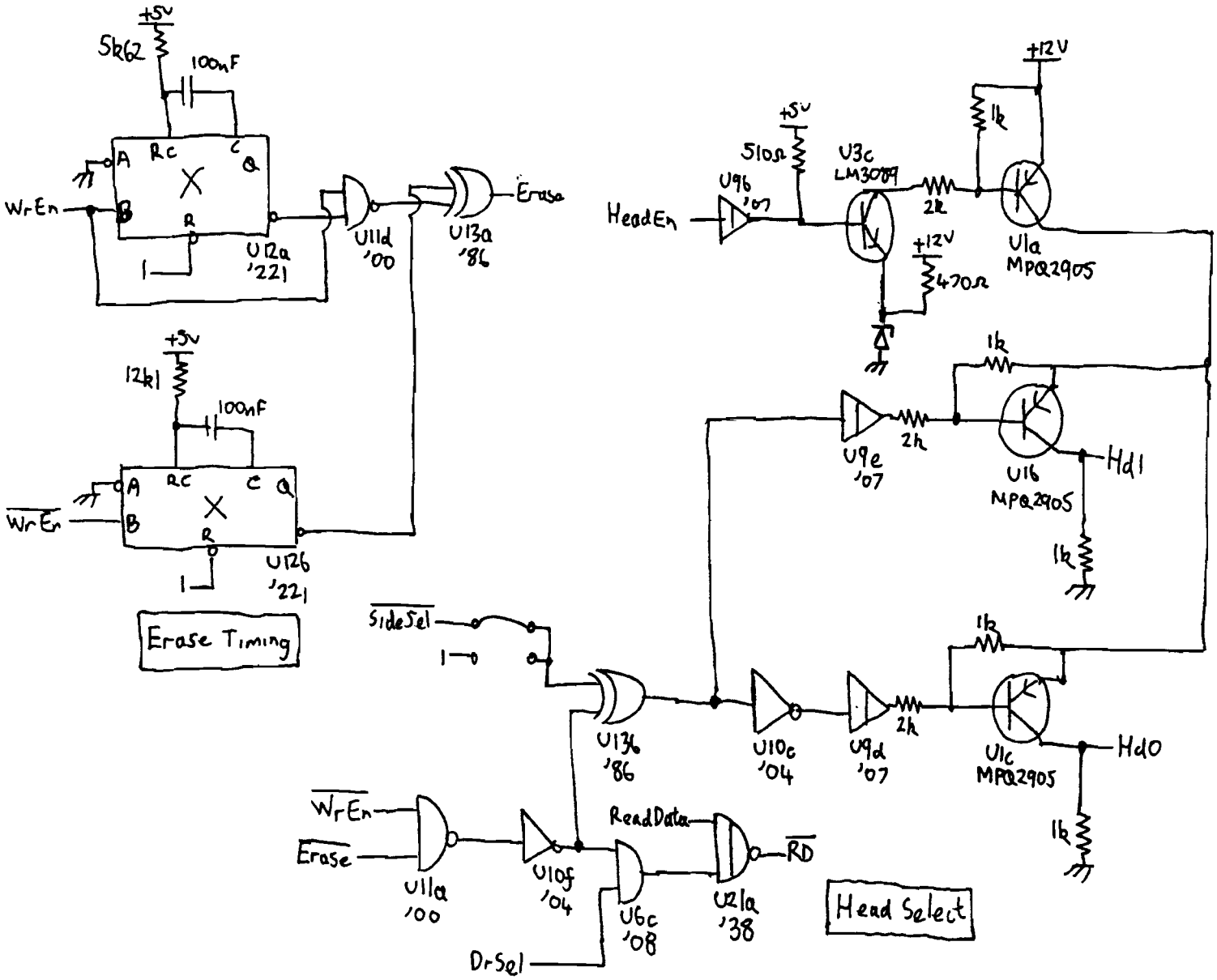

HP9130 (CDC/MPI) Sheet 5

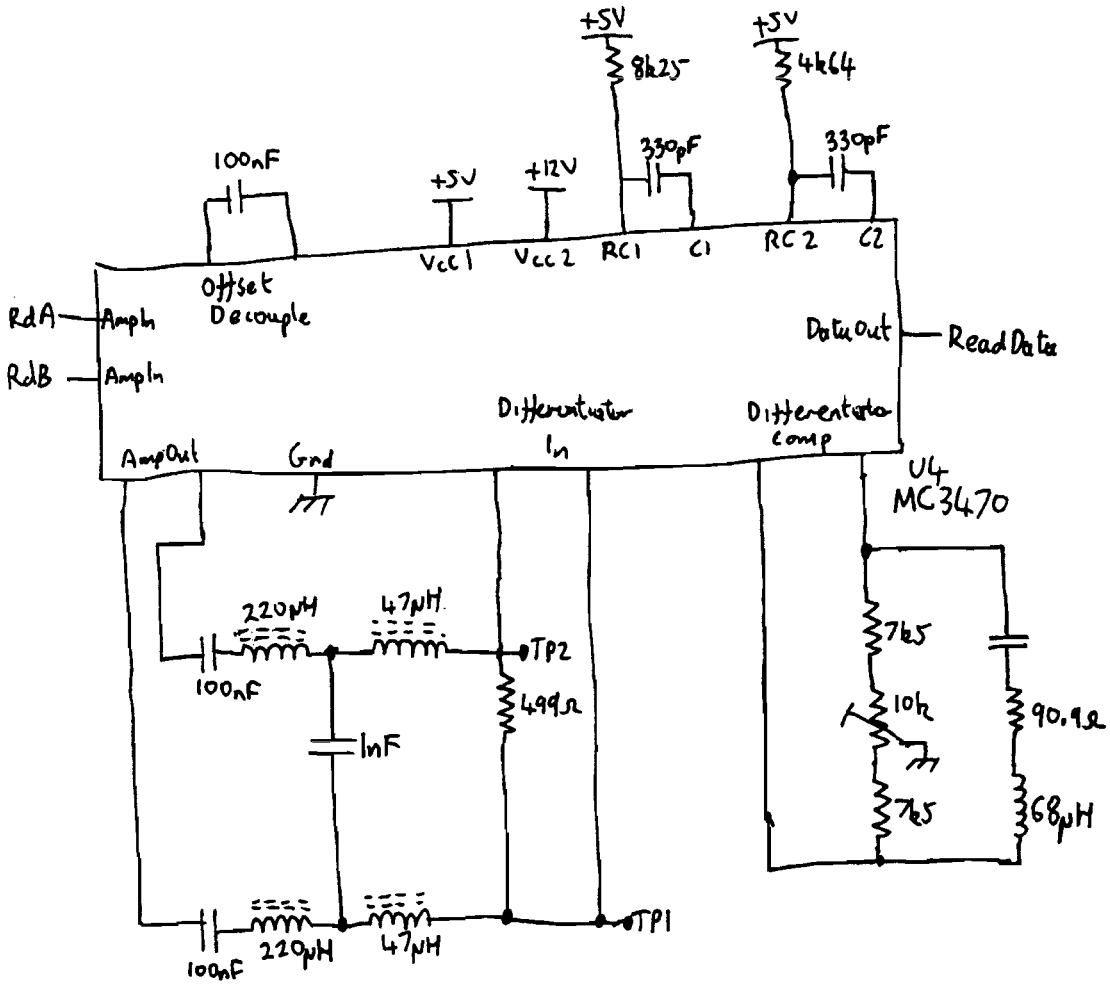

Read

HP9130 (CDC/MPI) Sheet 6

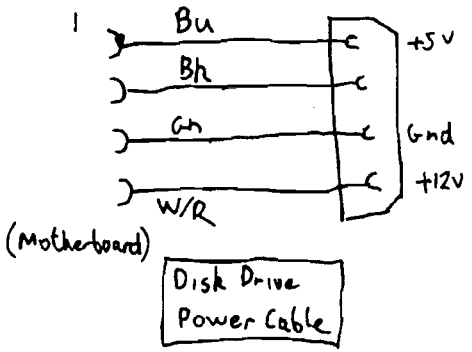

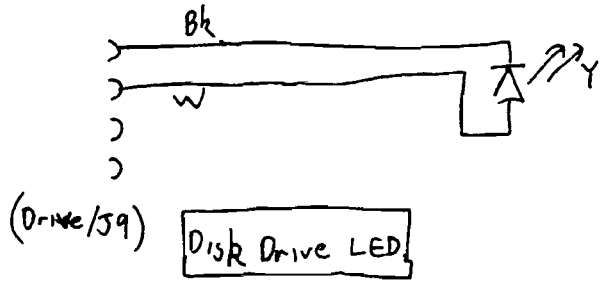

HP9826/HP9836 Disk Drive Cables

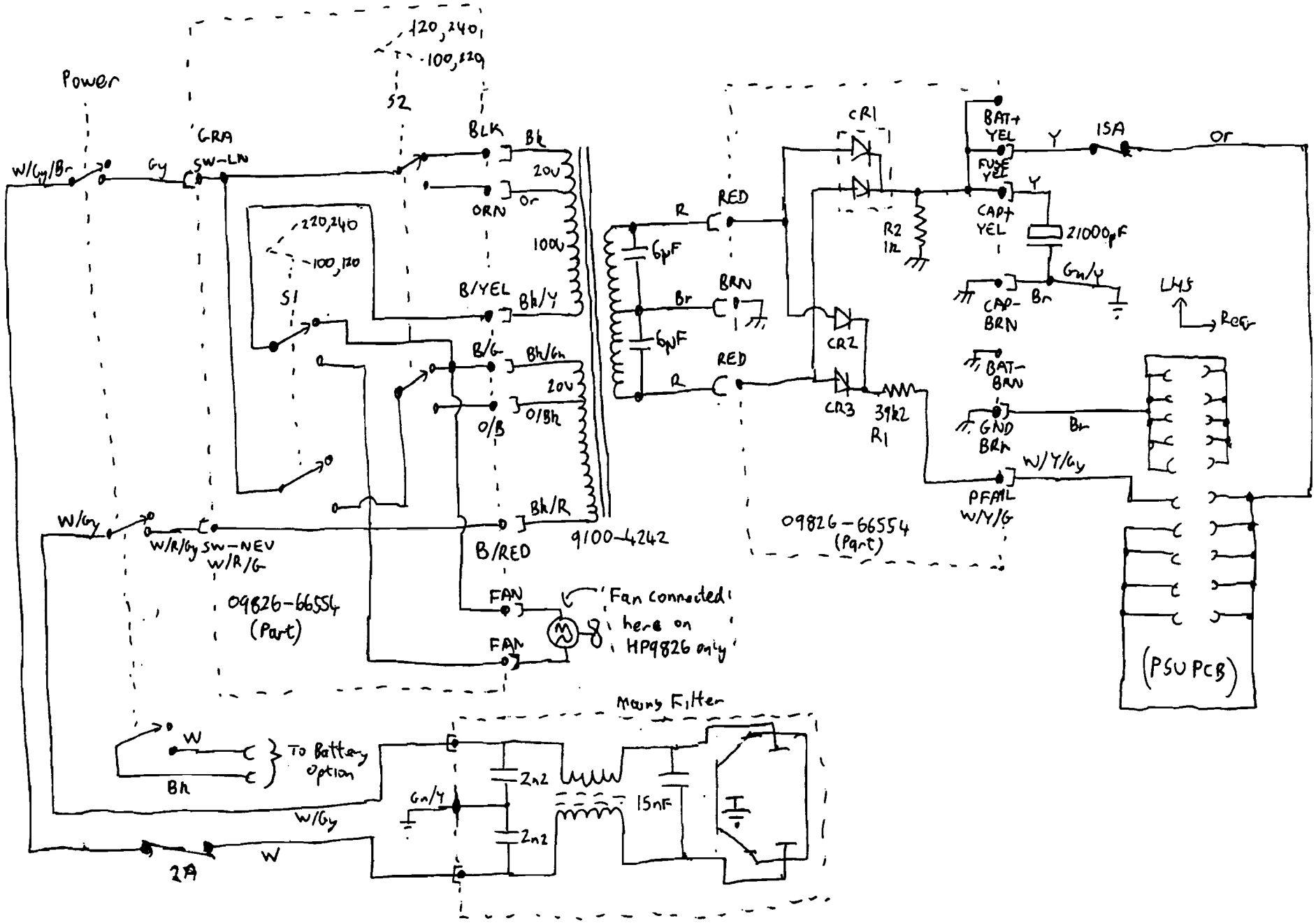

HP9826/HP9836 Transformer wiring

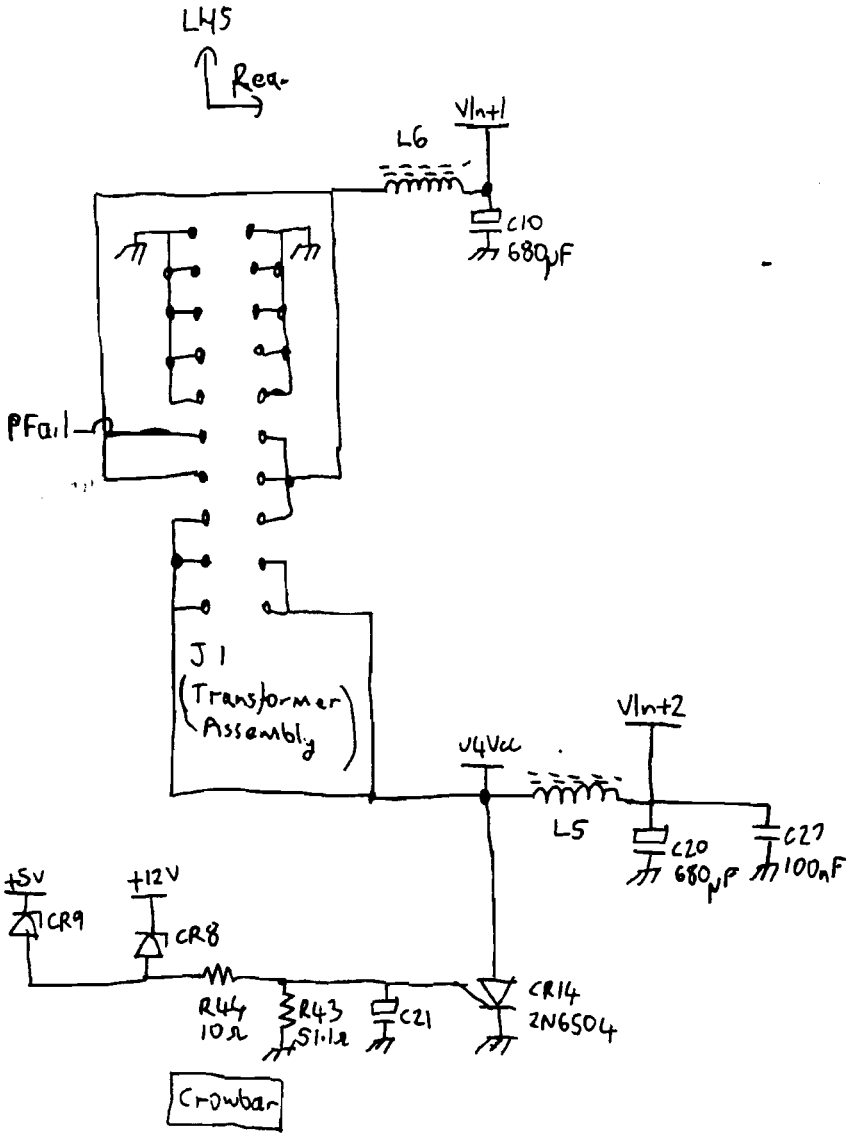

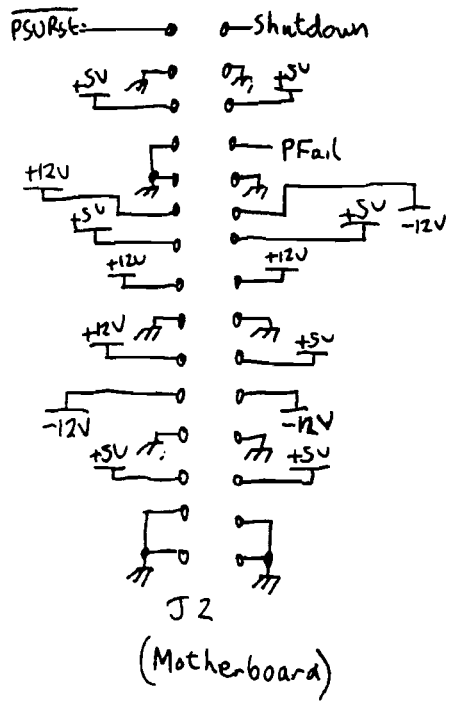

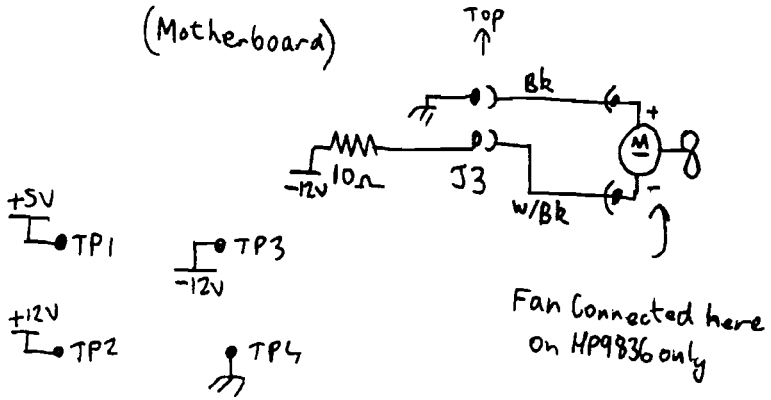

HP9826/HP9836 PSU PCB Sheet 1 09826-66553

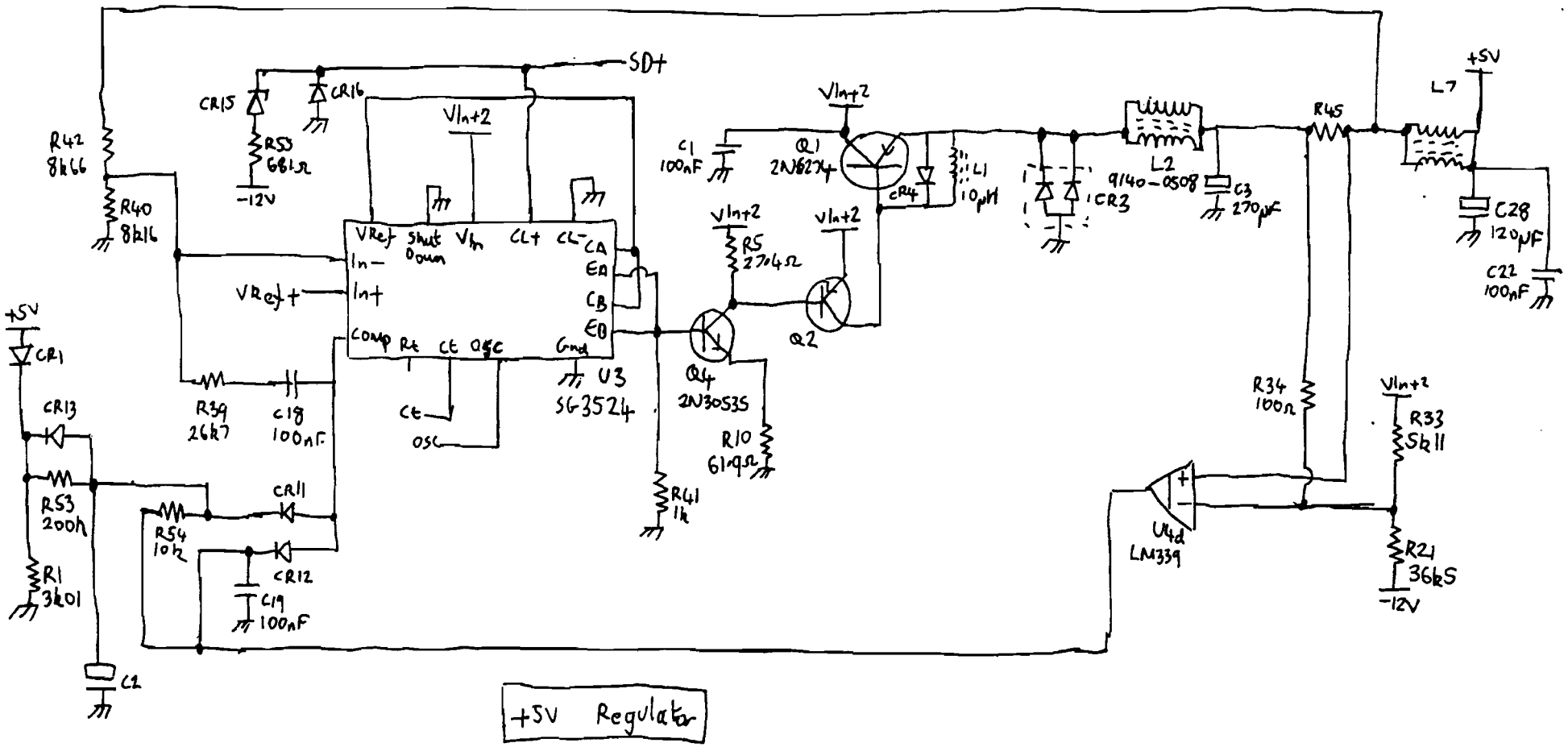

+5V Regulator

HP9826/HP9836 PSU PCB Sheet 2 09826-66553

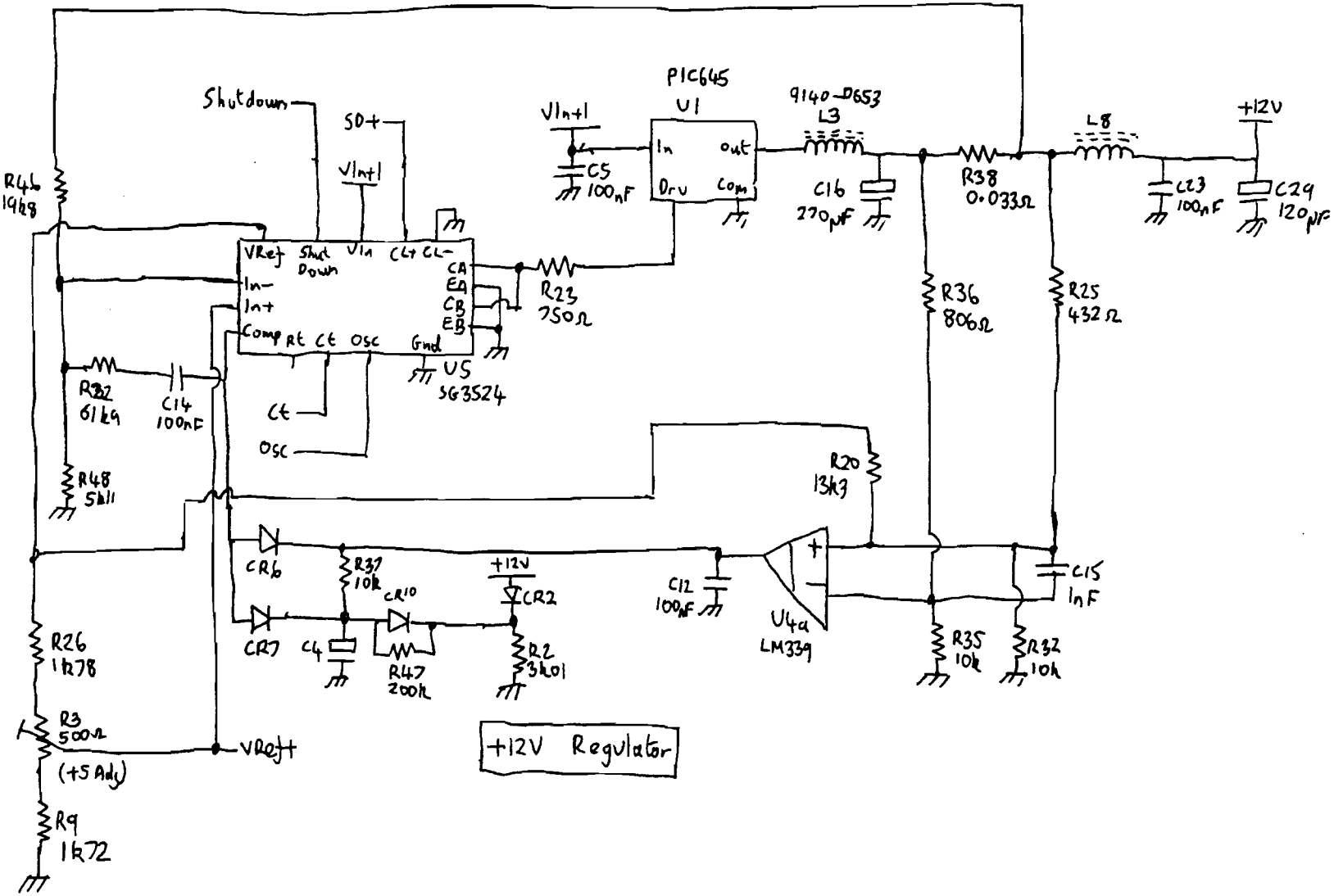

HP9826/HP9836 PSU PCB Sheet 3 09826-66553

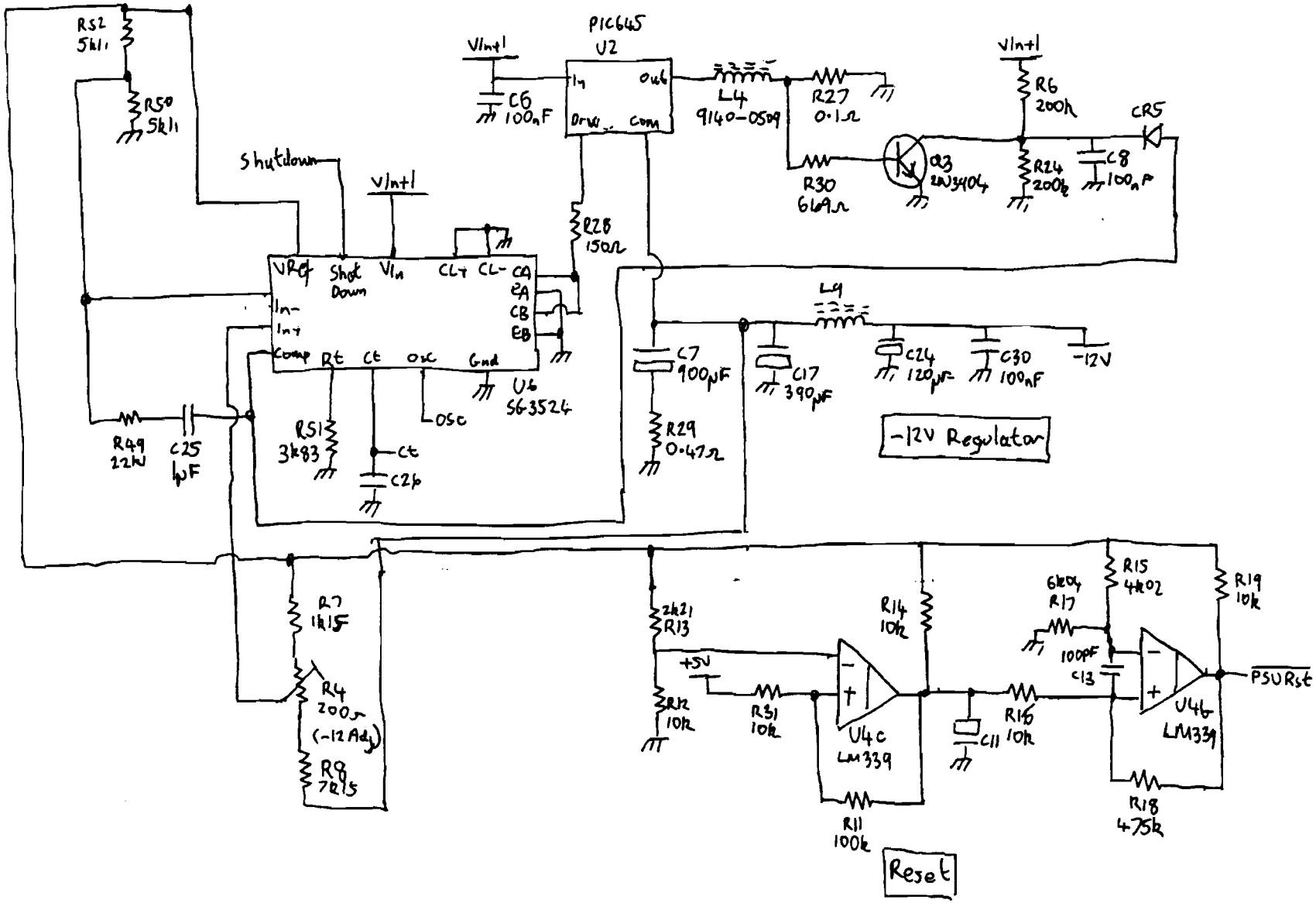

HP9826 / HP9836 PSU PCB Sheet 4 09826-66553

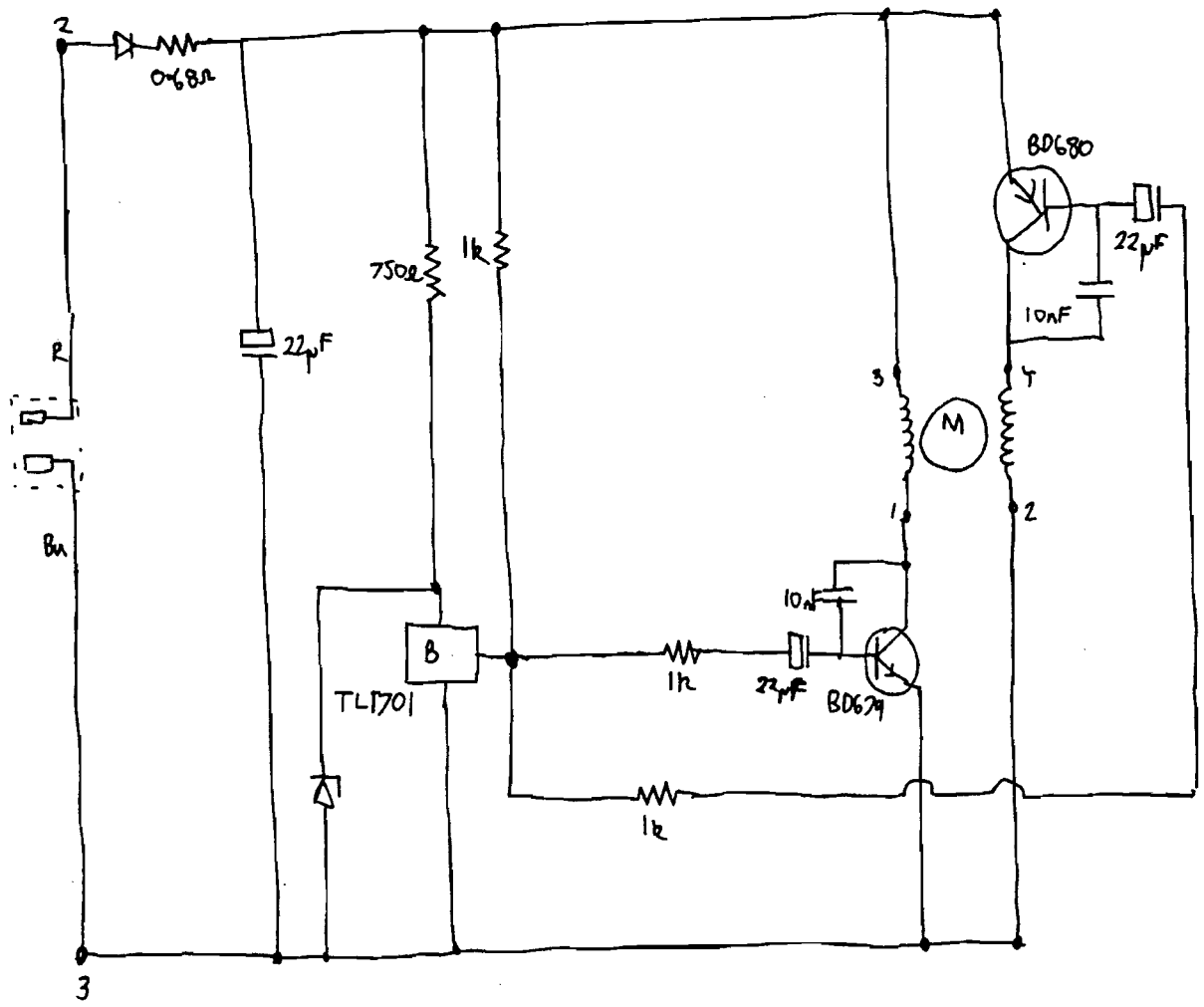

HP9836 Fan Papst 6027-030 PCB

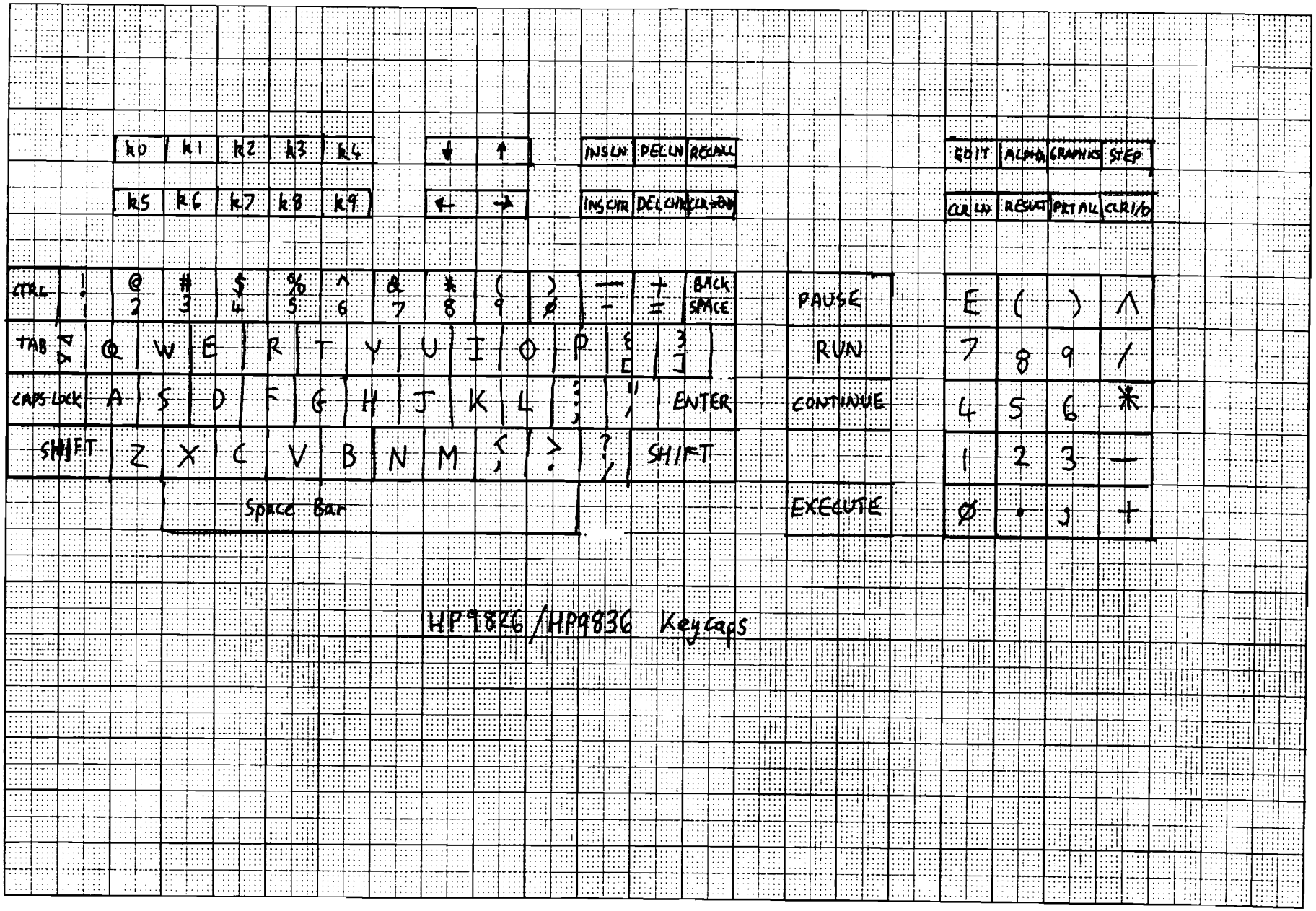

HP9826/HP9836 Keycaps

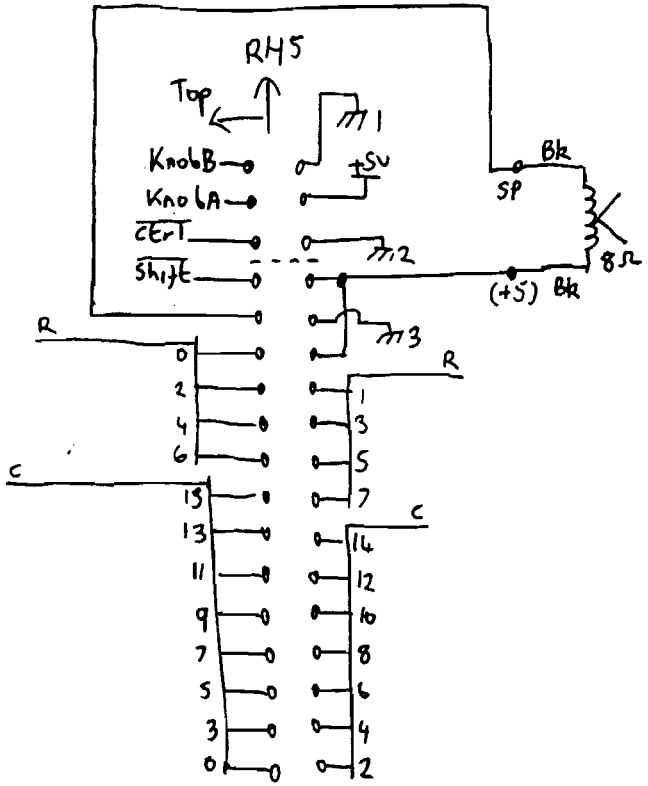

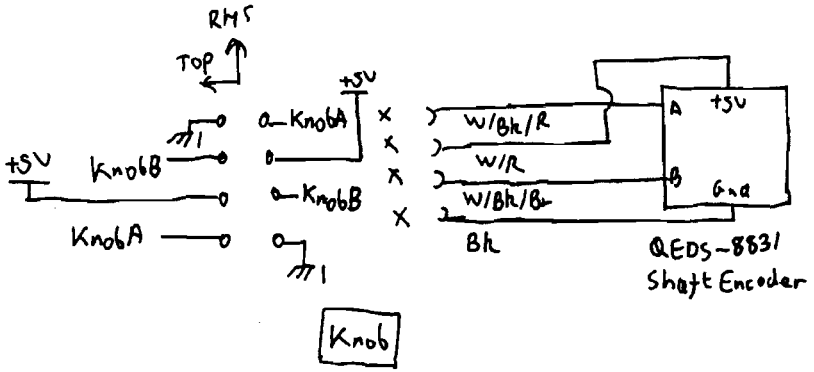

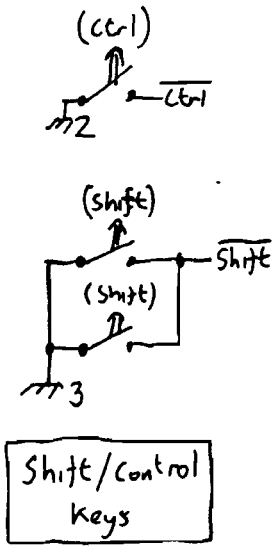

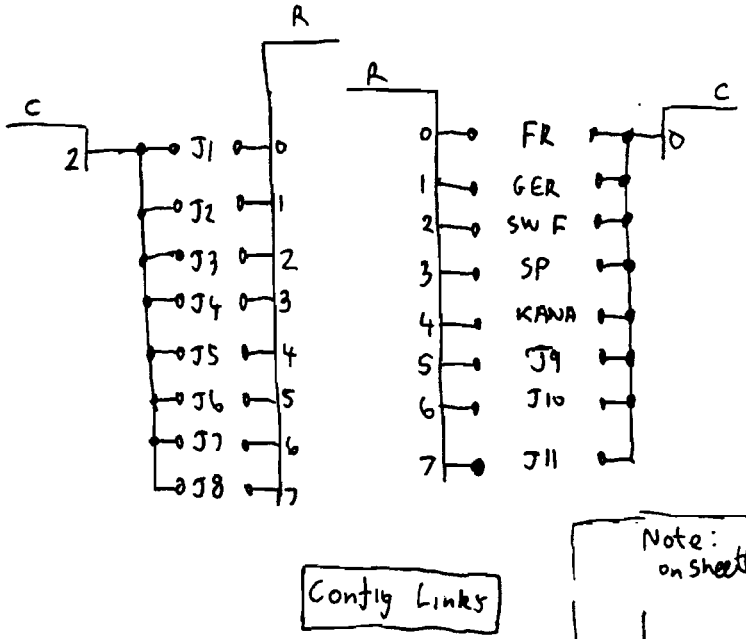

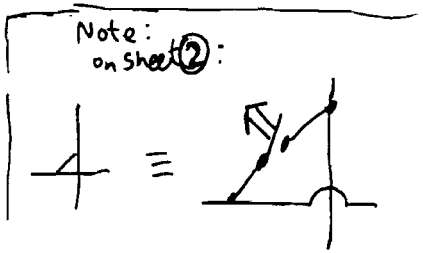

HP9826 /HP9836 Keyboard Sheet(1) 09826-26531

R \ C	3	4	5	6	7	8	9	10	11	12	13	14	15
	CAPS LOCK	k3	INSLN	EDIT	PAUSE	N1	N7	! 1	(9	↖ ;	Q	A	Z
0	TAB ◁ ▷	k4	DELLN	ALPHA	ENTER	N2	N8	@ 2	) Ø	> .	W	S	X
1	k0	↓	RECALL	GRAPHICS	CONTINUE	N3	N9	# 3	— =	? /	E	D	C
2	k1	↑	INSCHR	STEP	EXECUTE	N−	N/	$ 4	+ −	Space bar	R	F	V
3	k2	k8	DEL CHR	CLR LN	NØ	N4	NE	% 5	{ [	O	T	G	B
4	k5	k9	CLR→END	RESULT	N.	N5	N(	^ 6	}]	P	Y	H	N
5	k6	←	BACK SPACE	PRTALL	N,	N6	N)	& 7	: ;	K	U	J	
6	k7	→	RUN	CLR I/O	N+	N*	N^	* 8	// /	L	I	M	
7													

HP9826/HP9836 Keyboard Sheet (2)

Key Matrix 09826-2653,

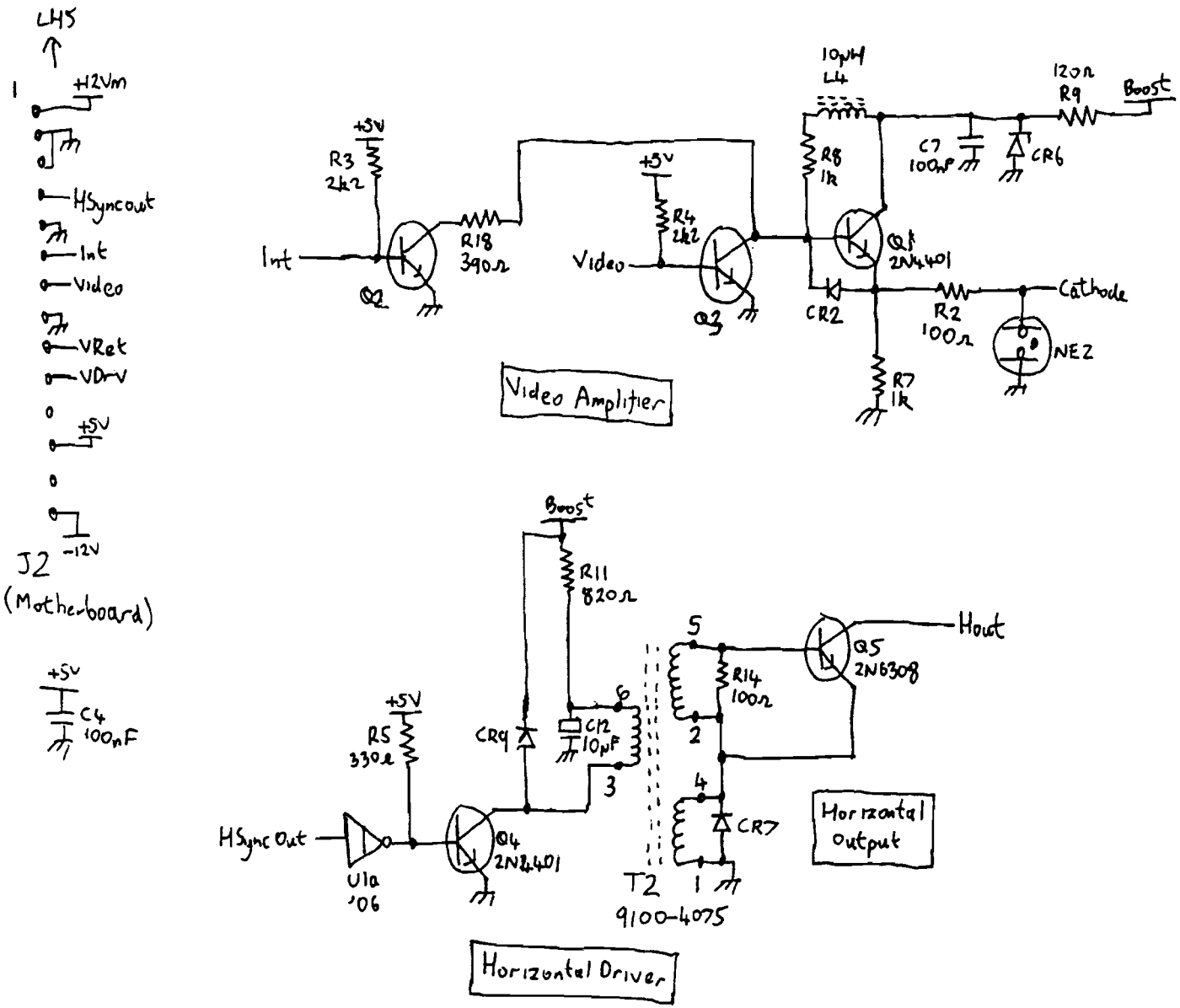

HP 9826 Monitor PCB Sheet (1) 09826-66571

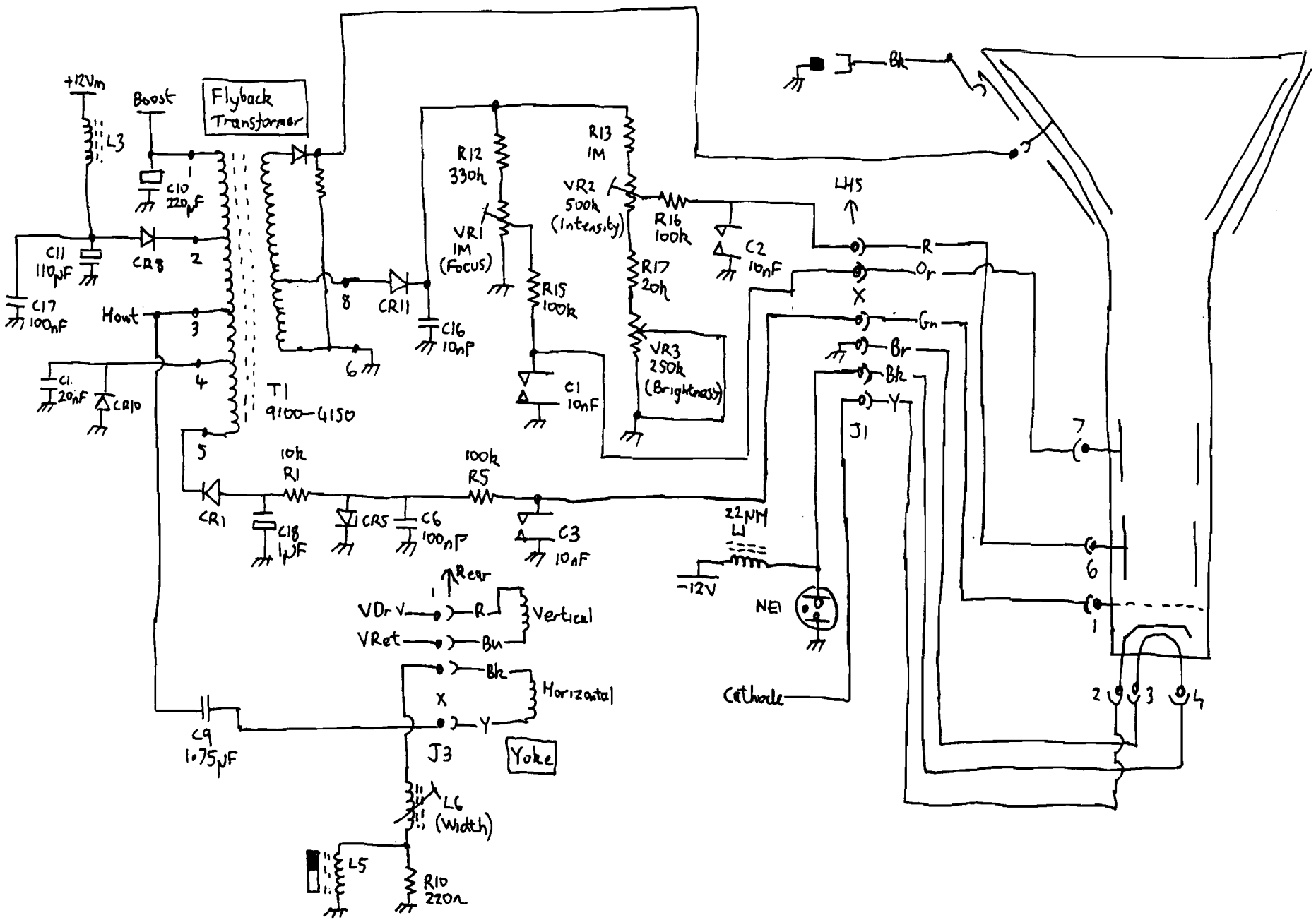

HP9826 Monitor PCB Sheet(2) 09826-66571

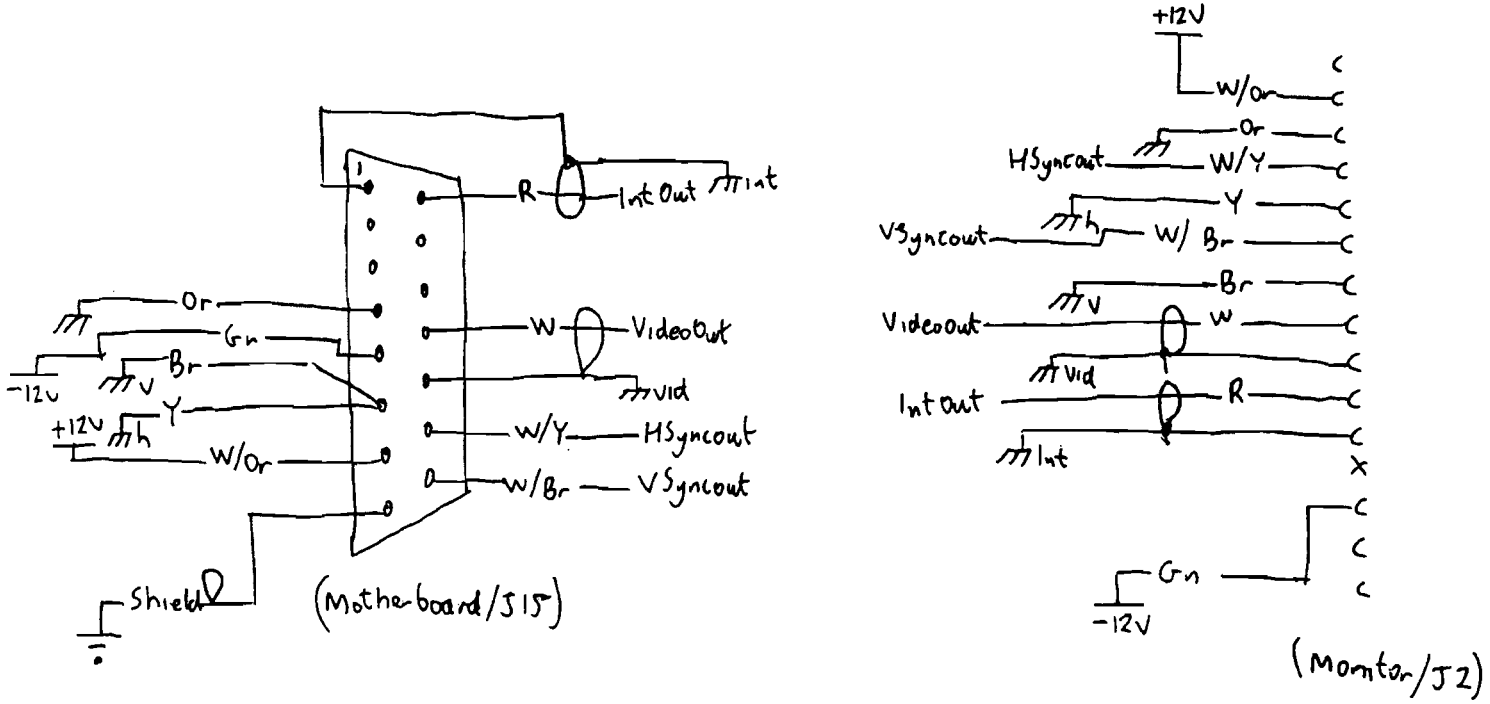

HP 9836 Monitor Cable

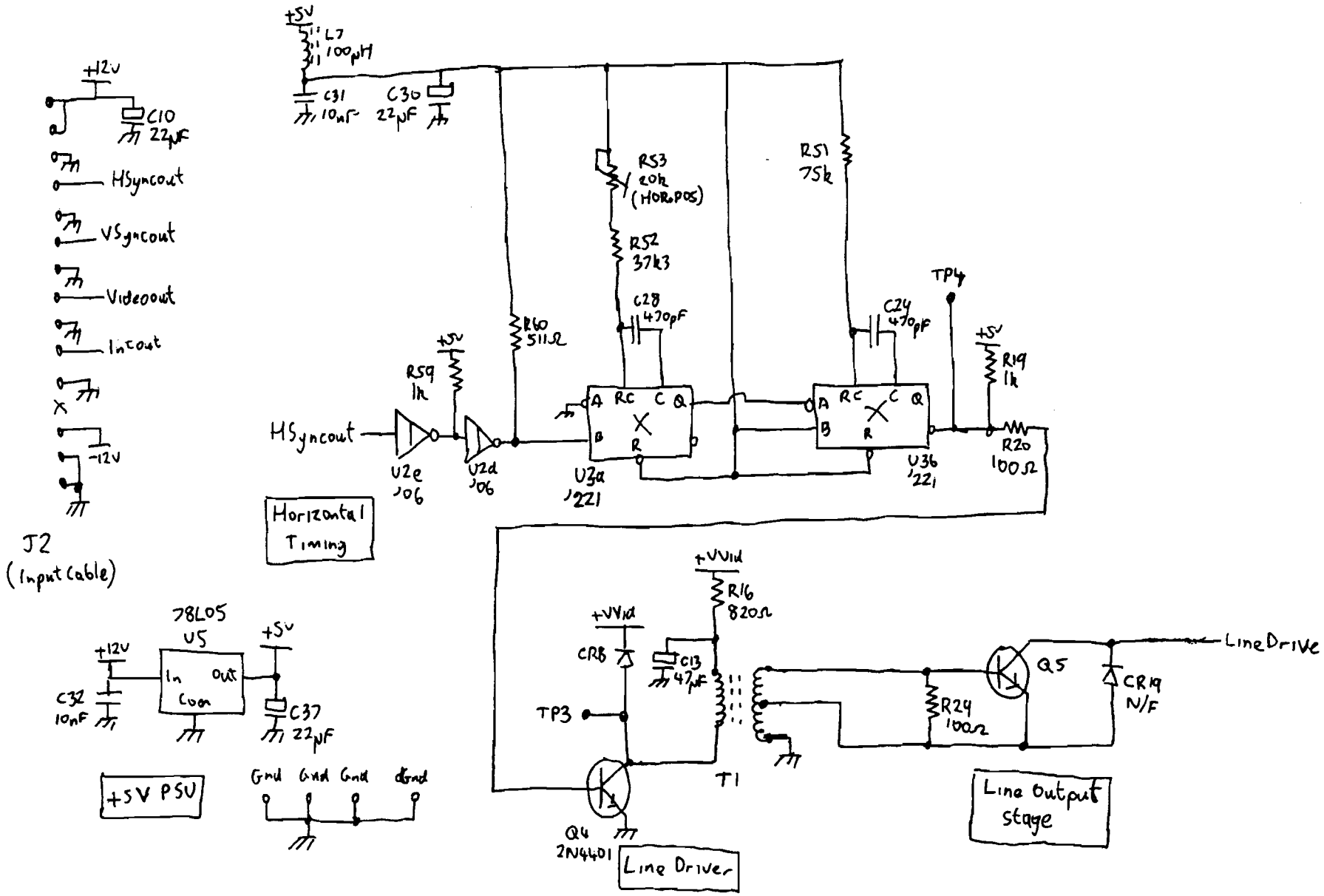

HP9836 Monitor PCB Sheet 1

09826-66580

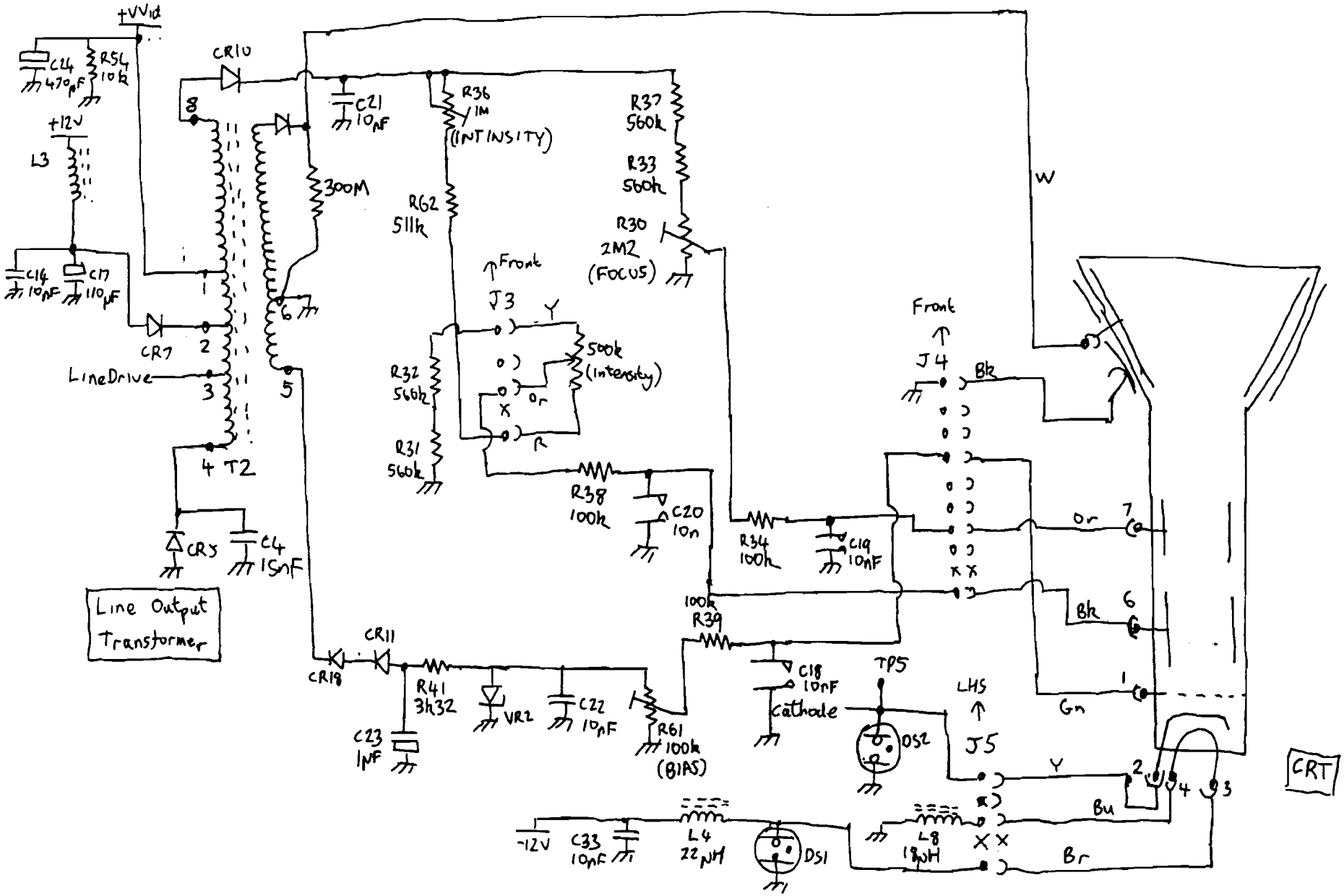

HP9836 Monitor PCB Sheet 2 09826-66580

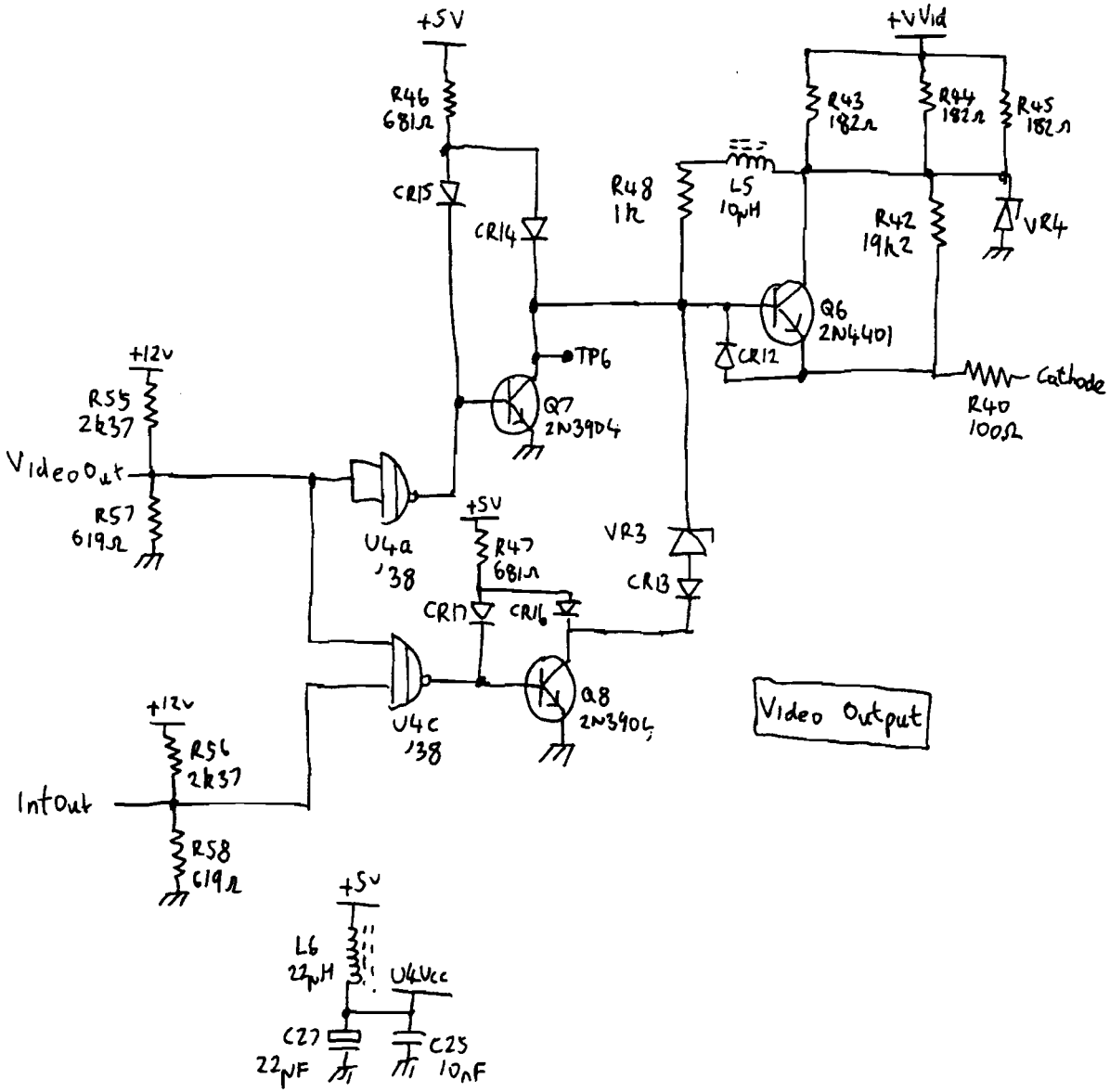

HP9836 Monitor PCB Sheet 3 09826-66580

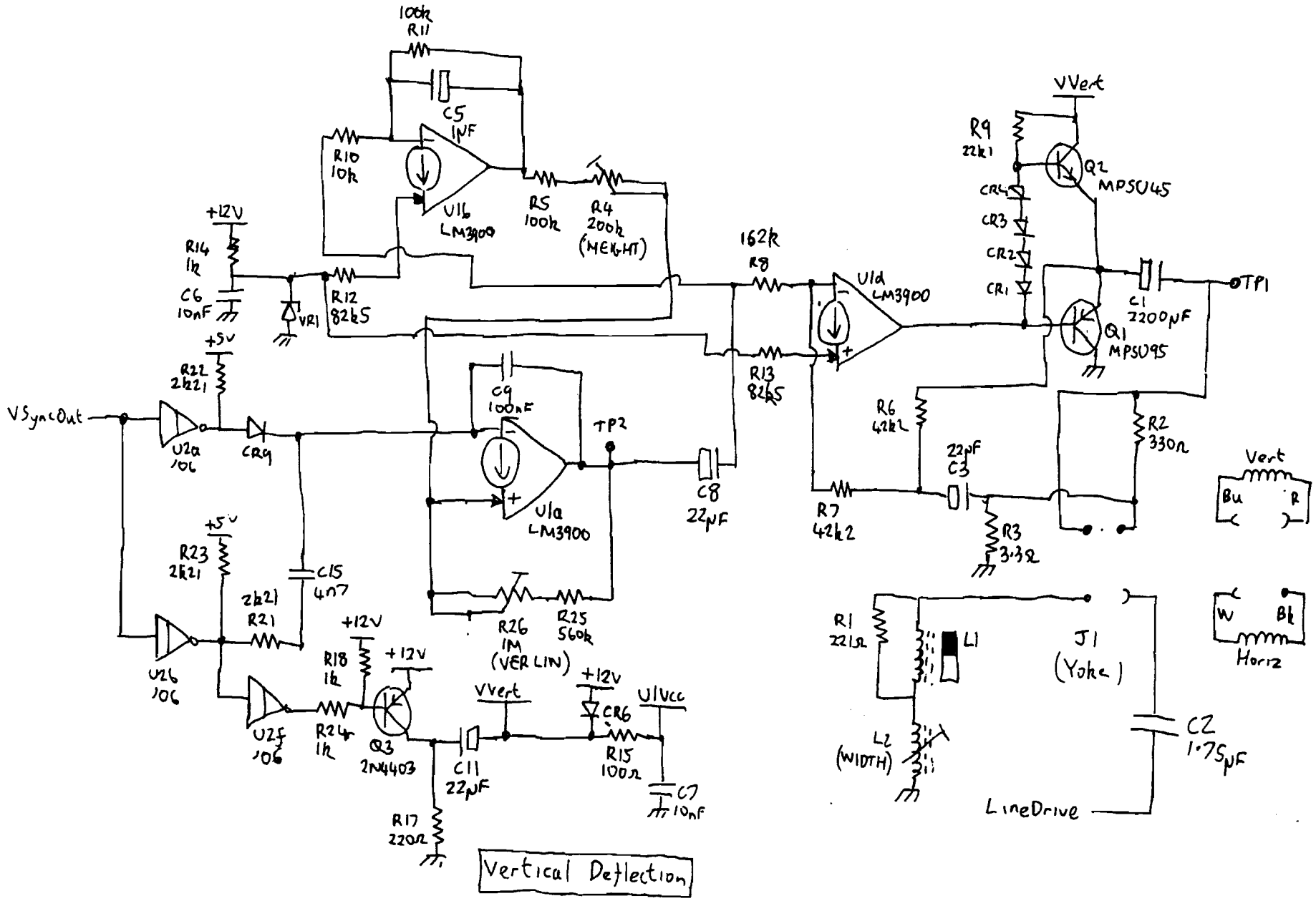

HP9836 Monitor PCB Sheet (4) 09826-66580

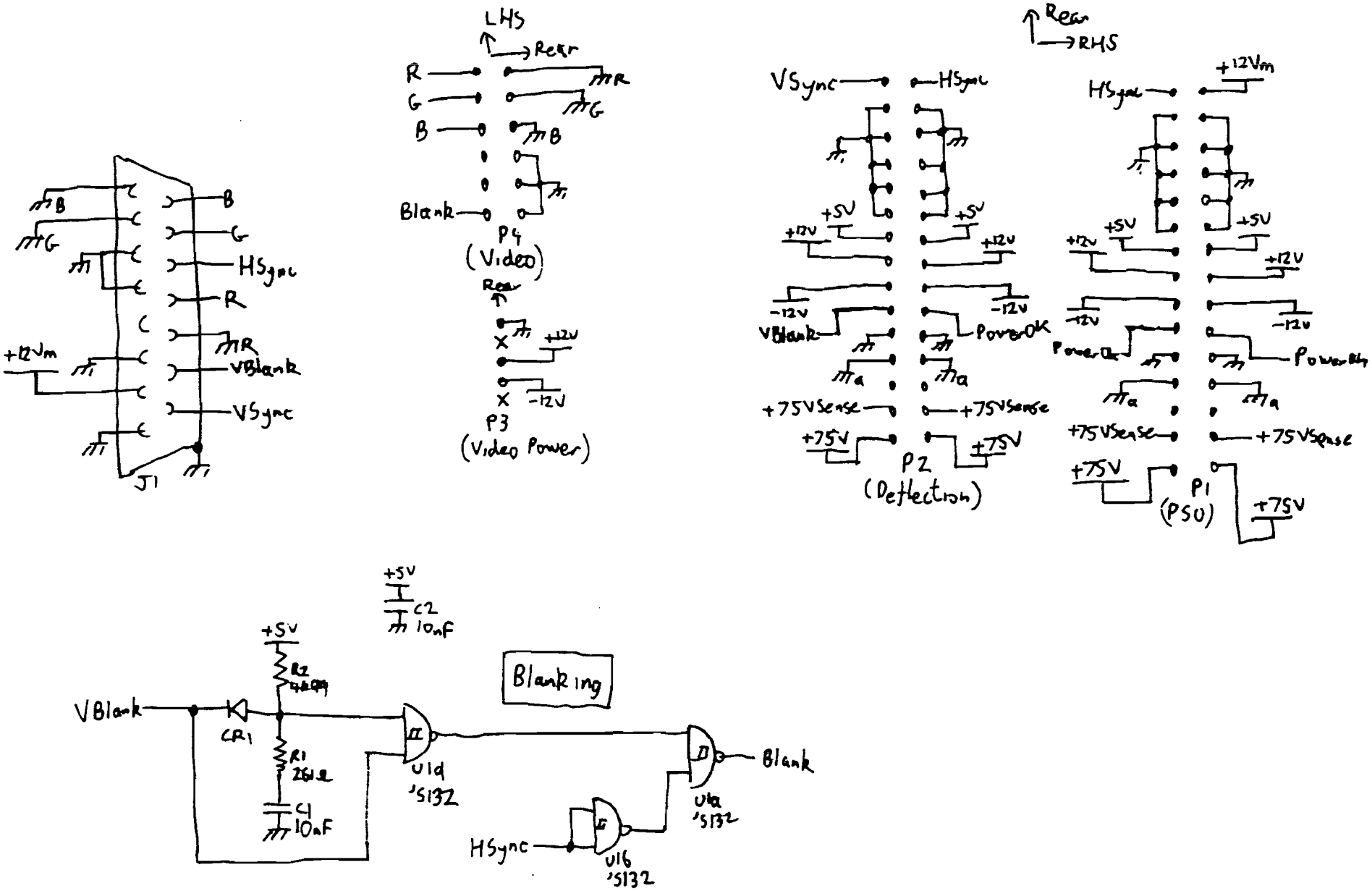

HP9836C Monitor Motherboard 09836-66503

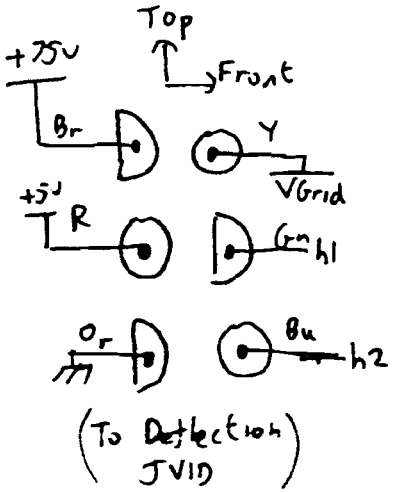

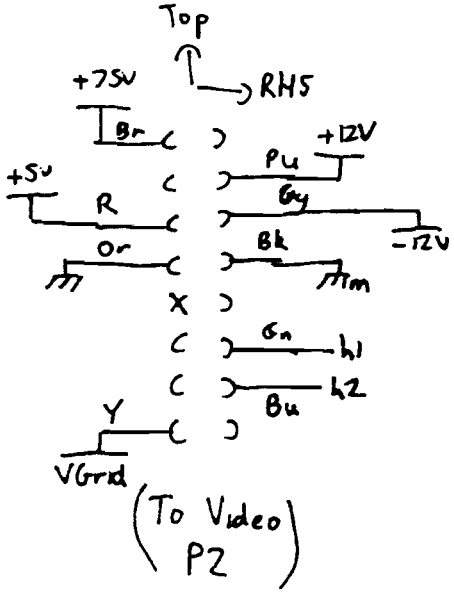

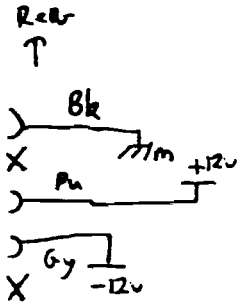

HP9836C Monitor Video PCB Power Cable

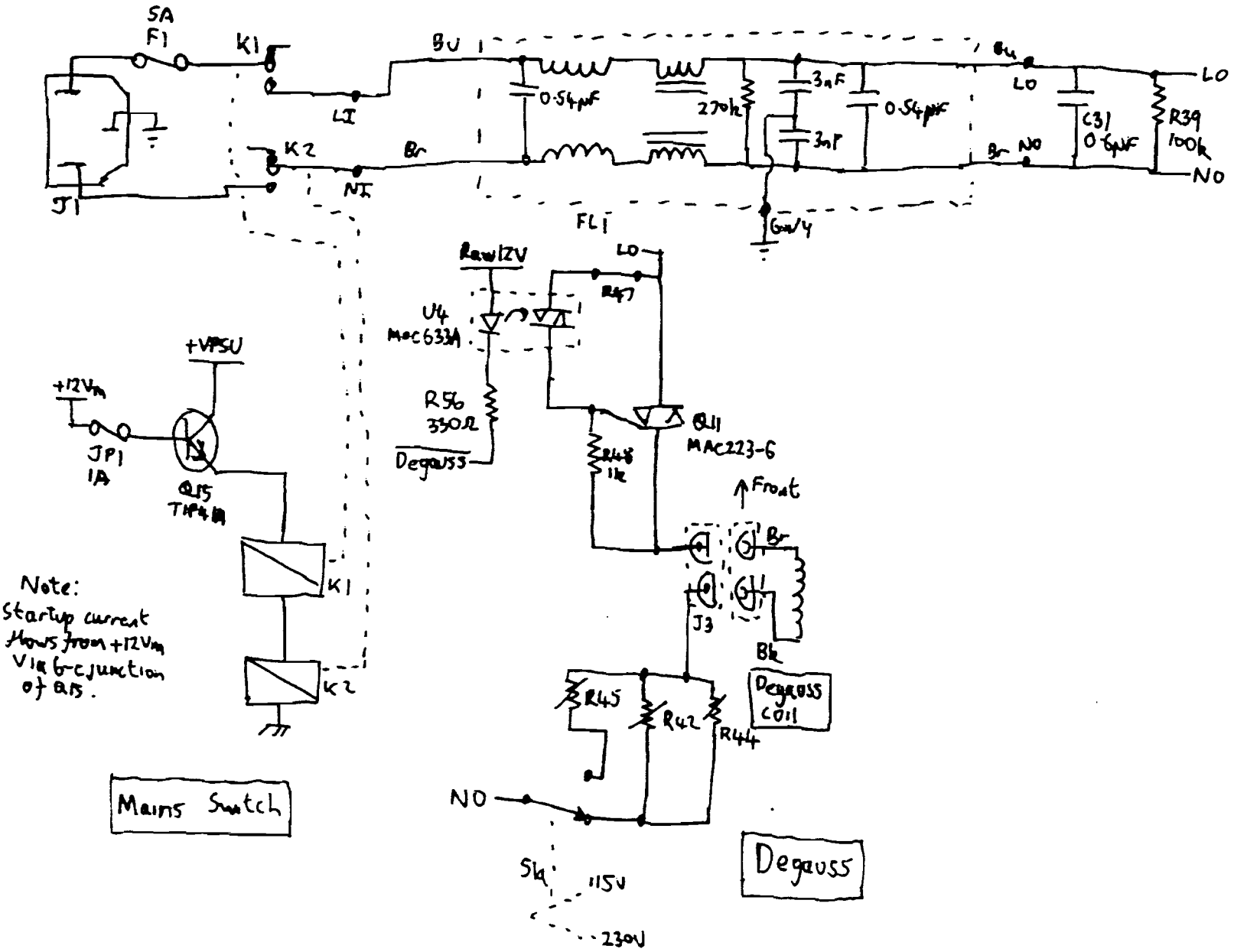

HP9836C Monitor PSU PCB Sheet(1) 09836-66550

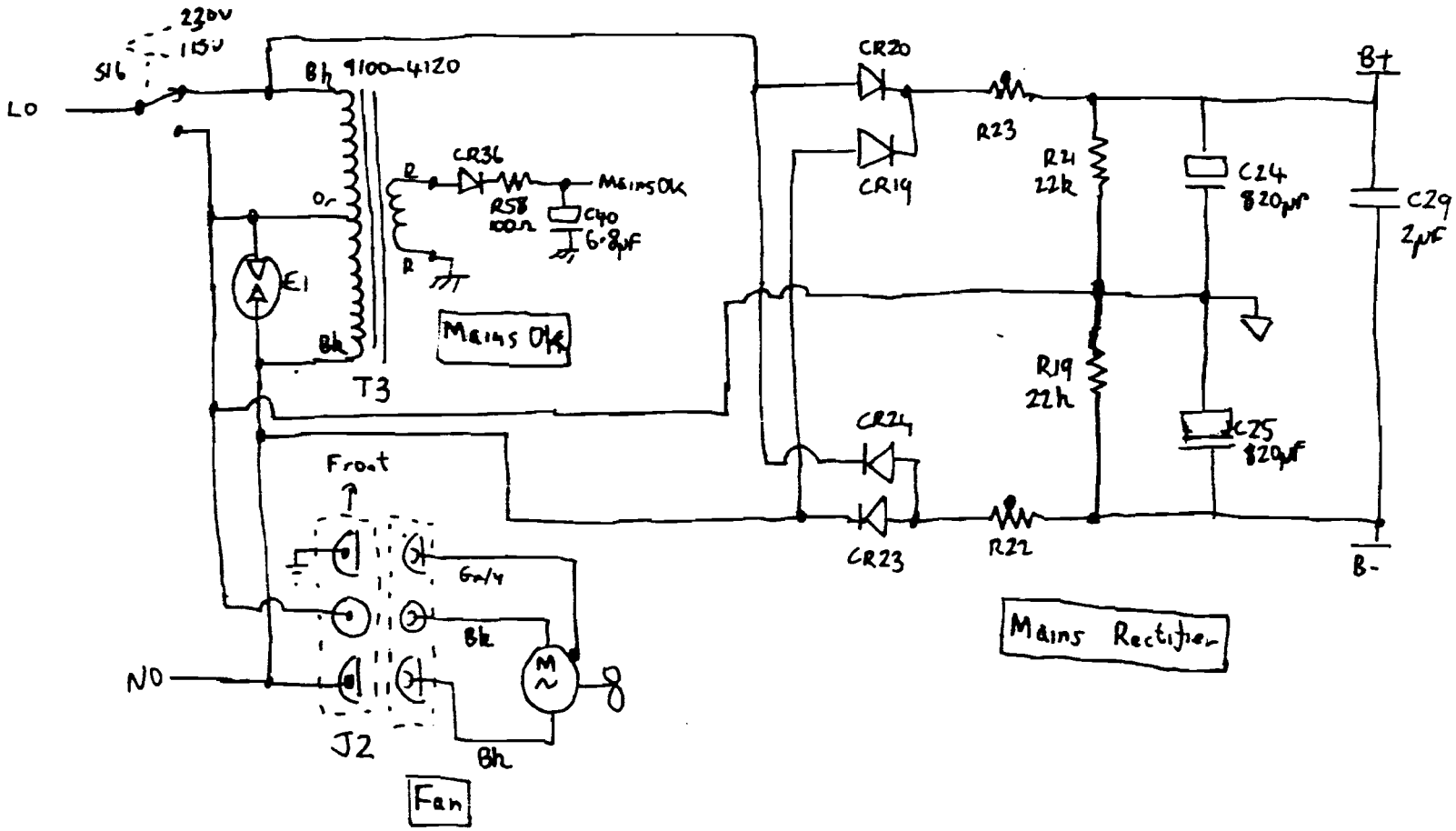

HP9836C Monitor PSU PCB Sheet 2

09836-66550

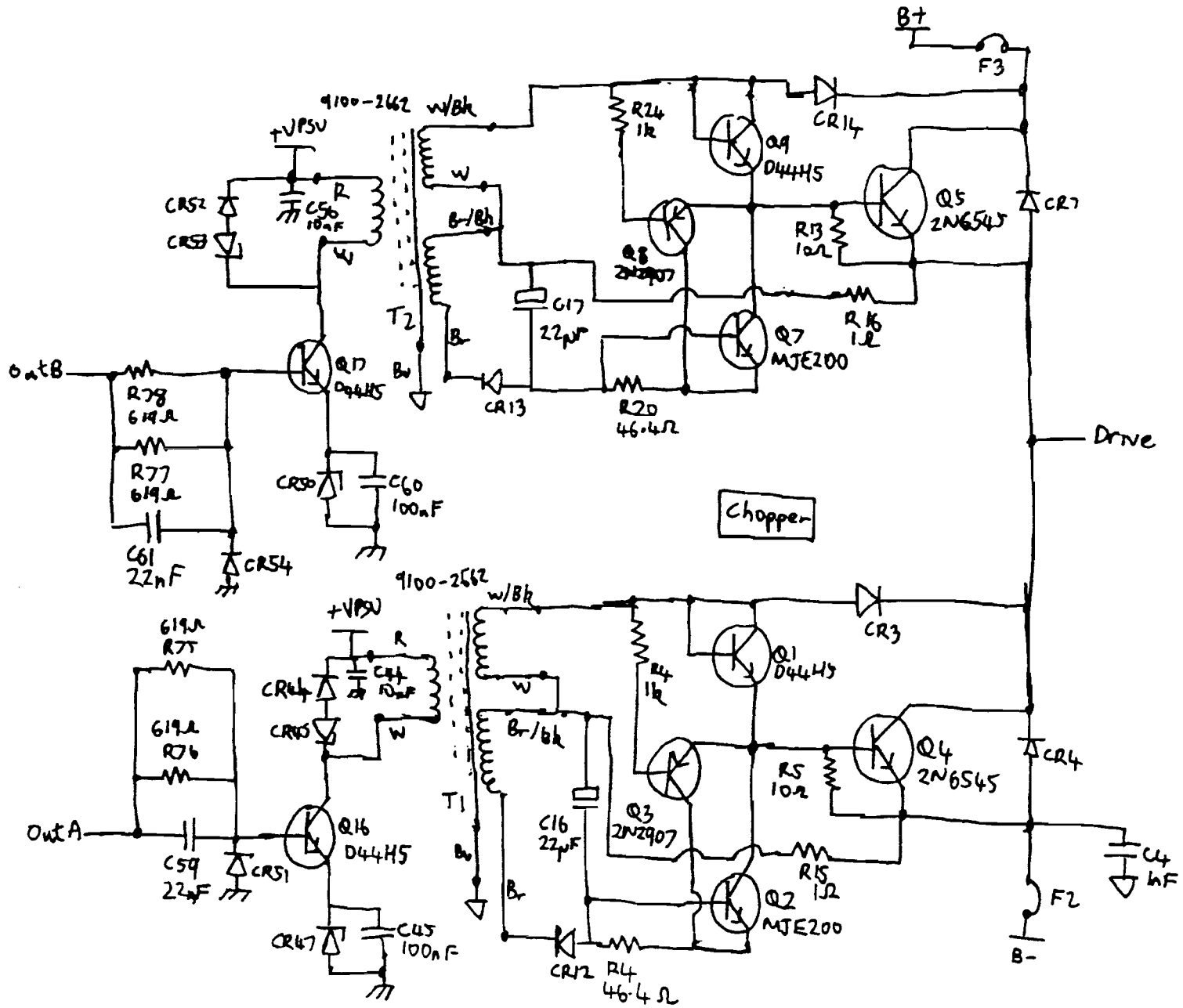

HP9836C Monitor PSU PCB Sheet (3) 09836-66550

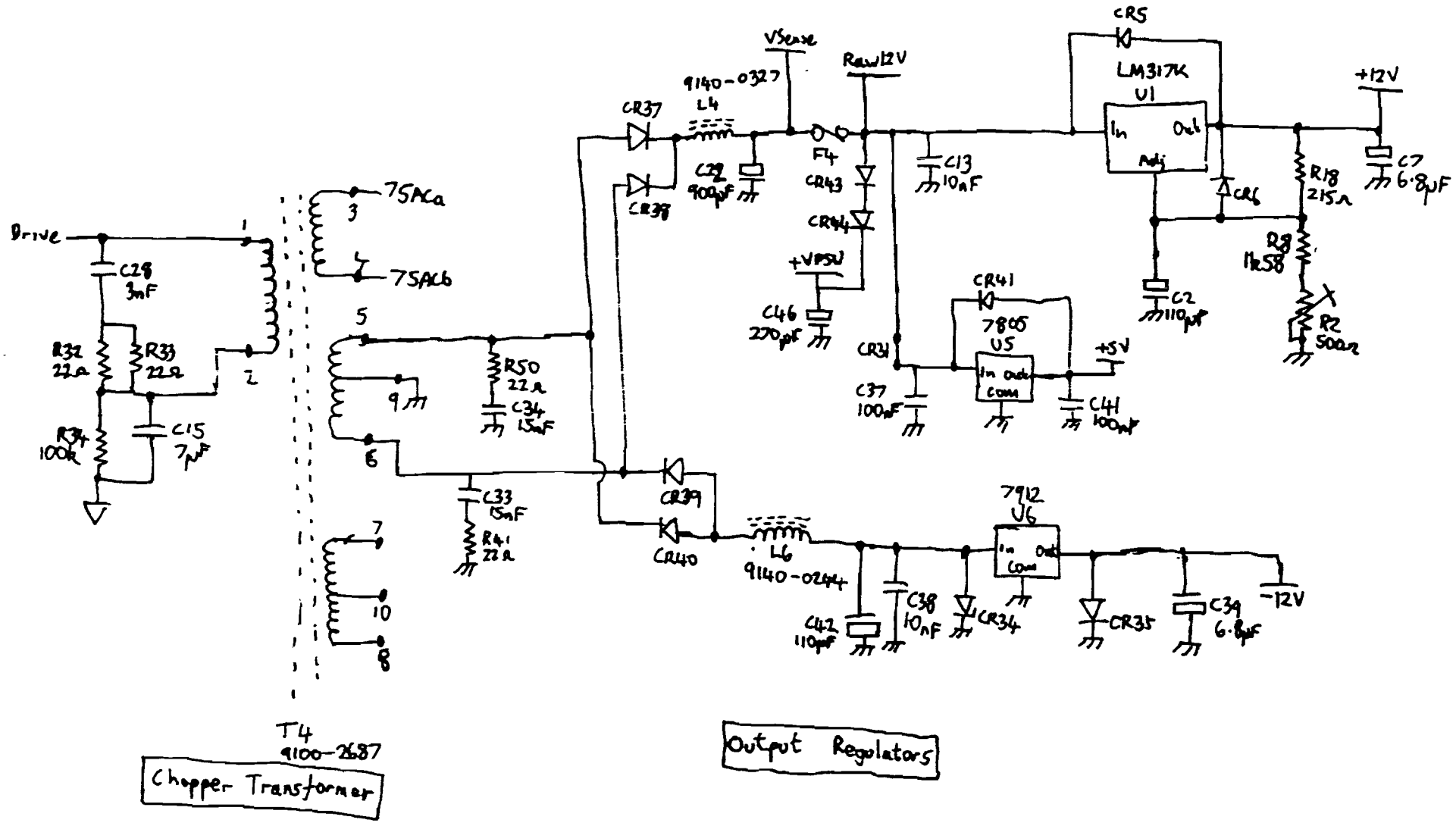

HP9836C Monitor PSU PCB Sheet (4) 09836-66550

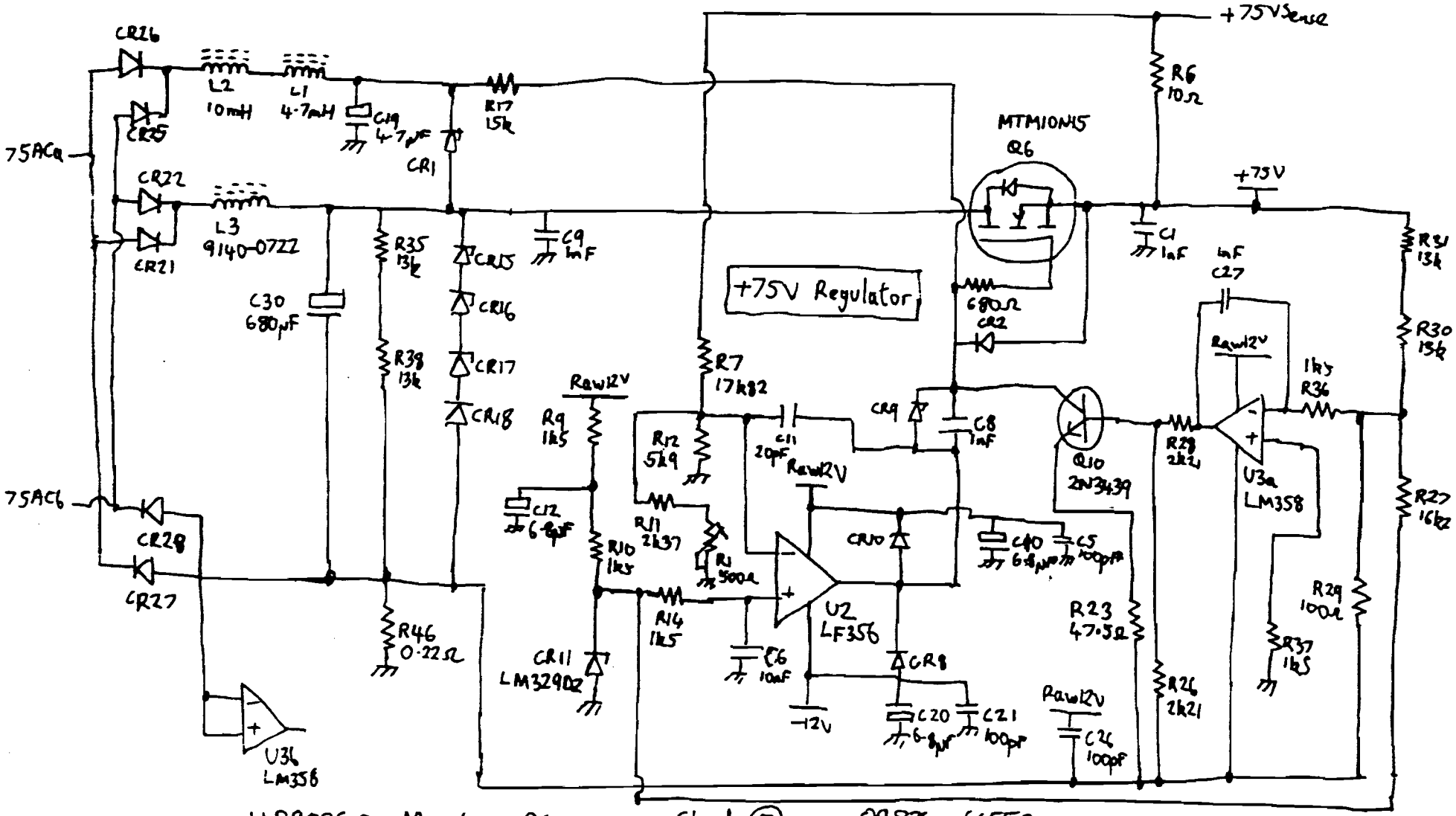

HP9836C Monitor PSU PCB Sheet (5) 09836-66550

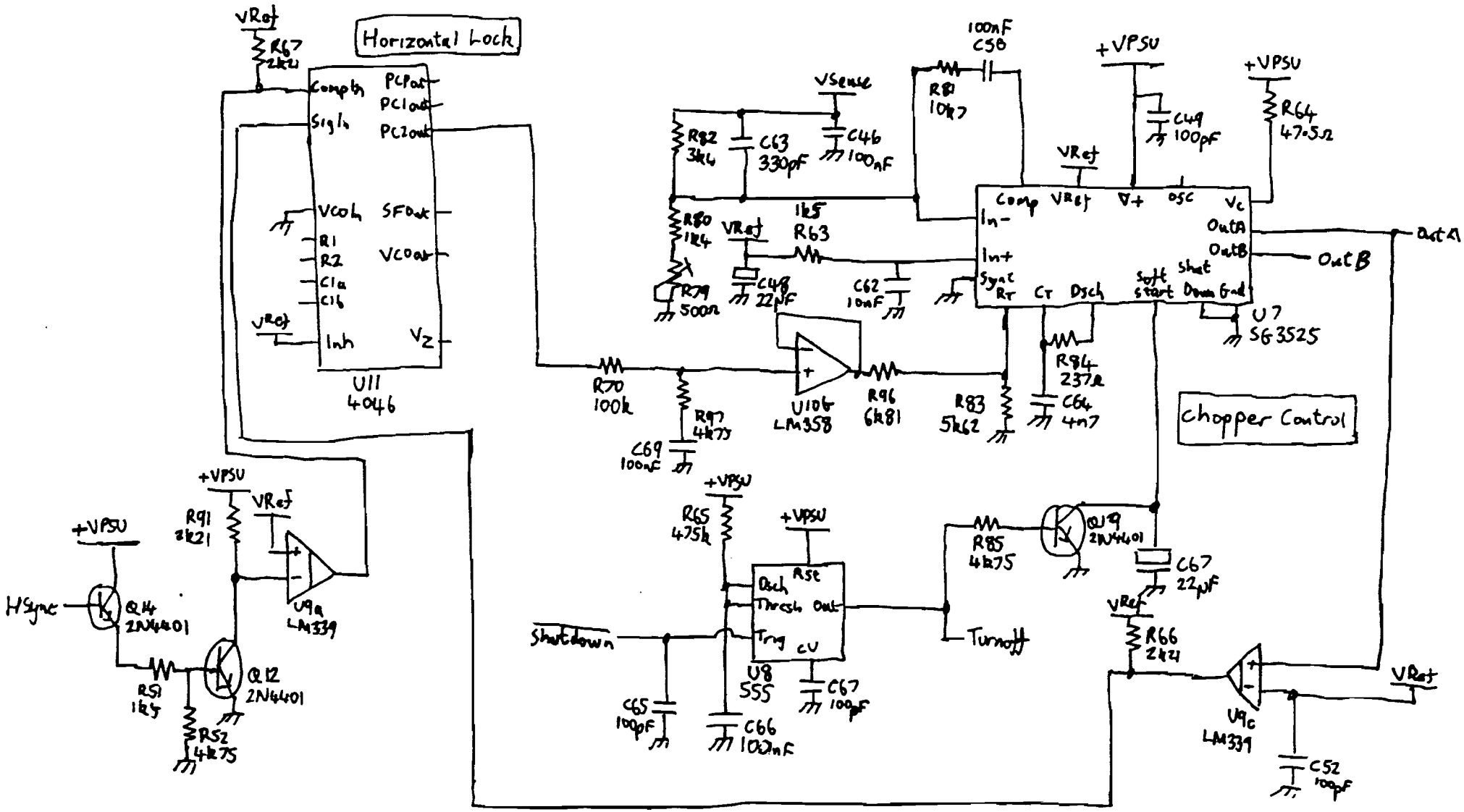

HP9836C Monitor PSU PCB Sheet 6 09836-66550

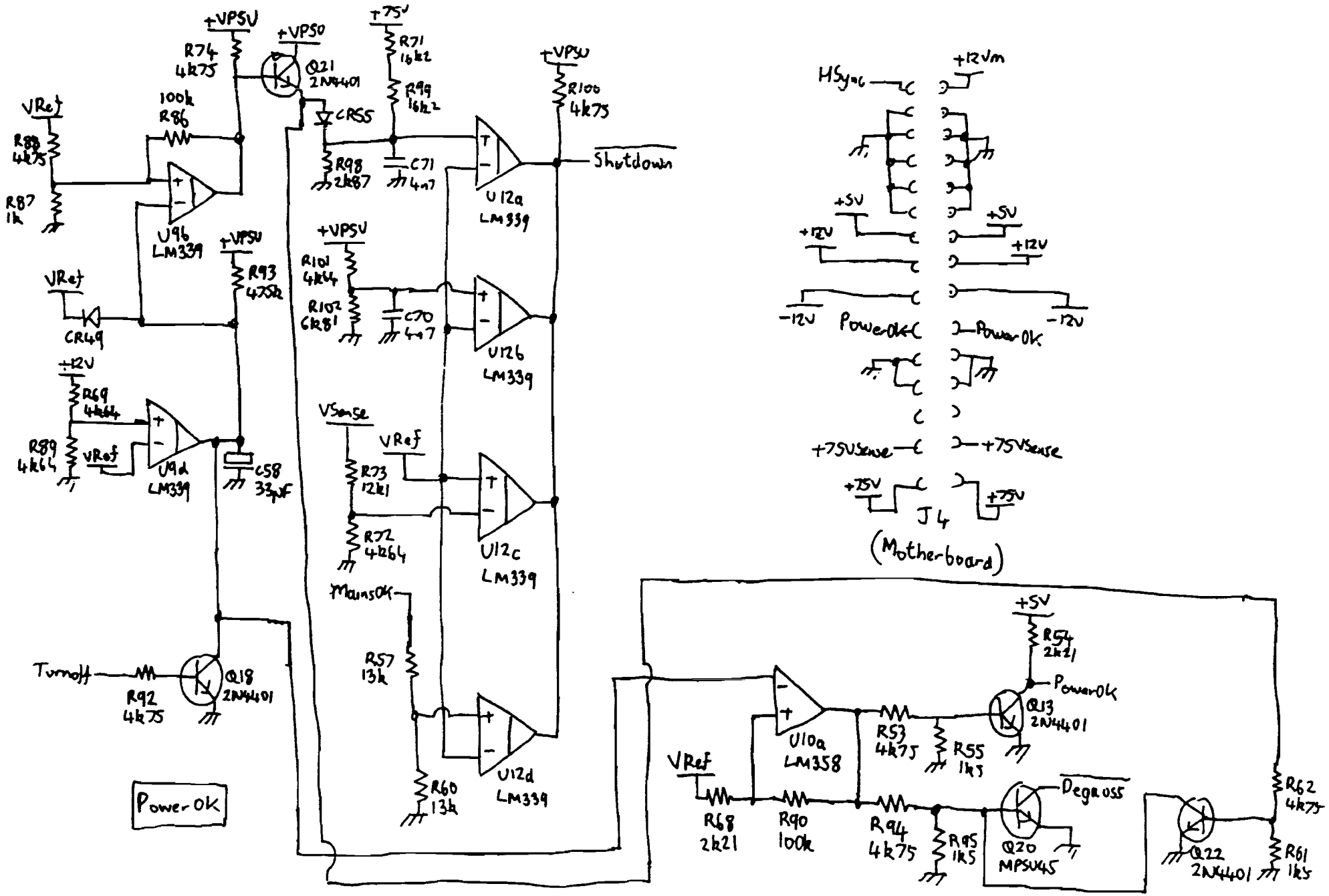

HP9836C Monitor PSU PCB Sheet(7) 09836-66550

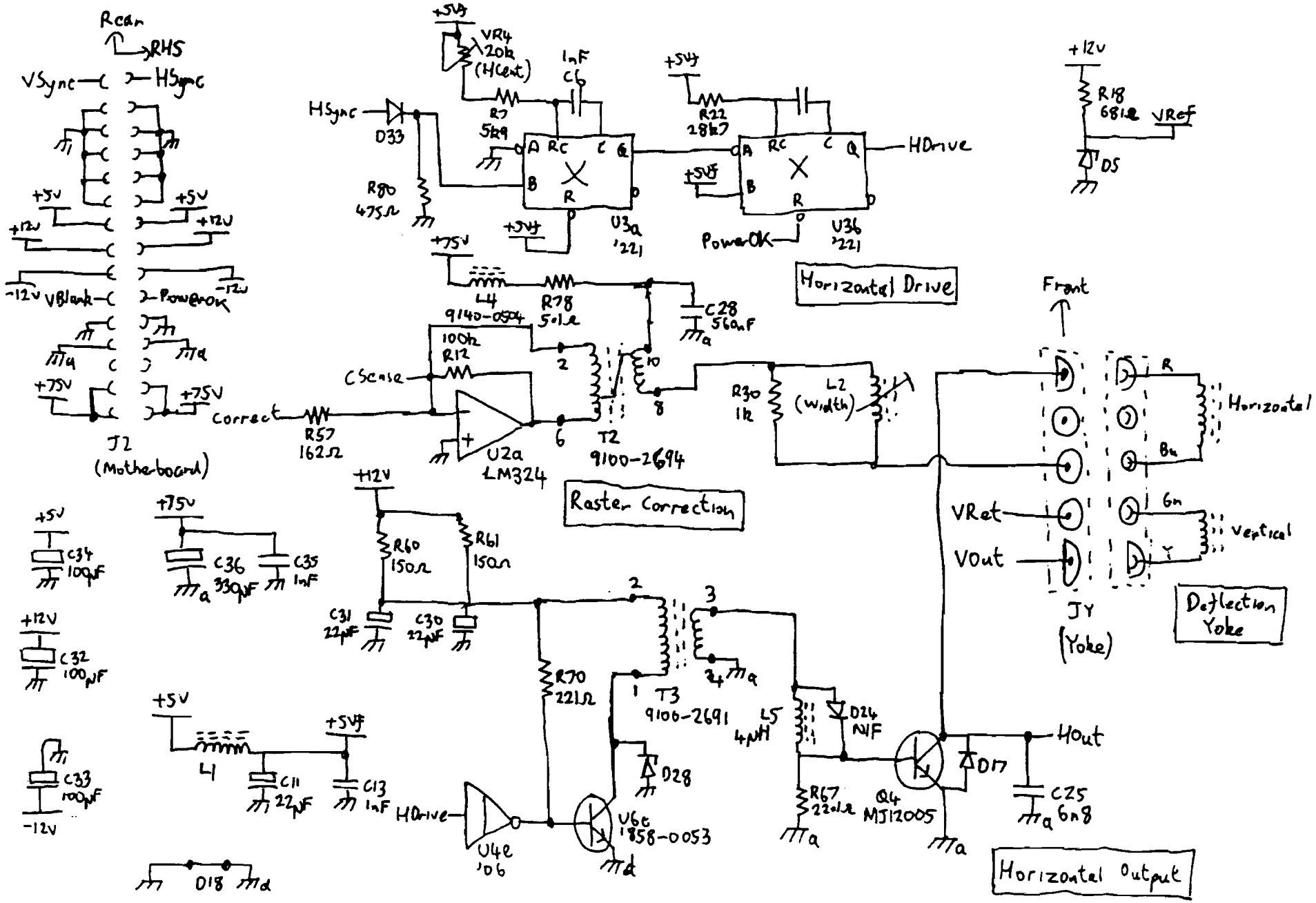

HP9836C Monitor Deflection PCB Sheet 1 09836-66540

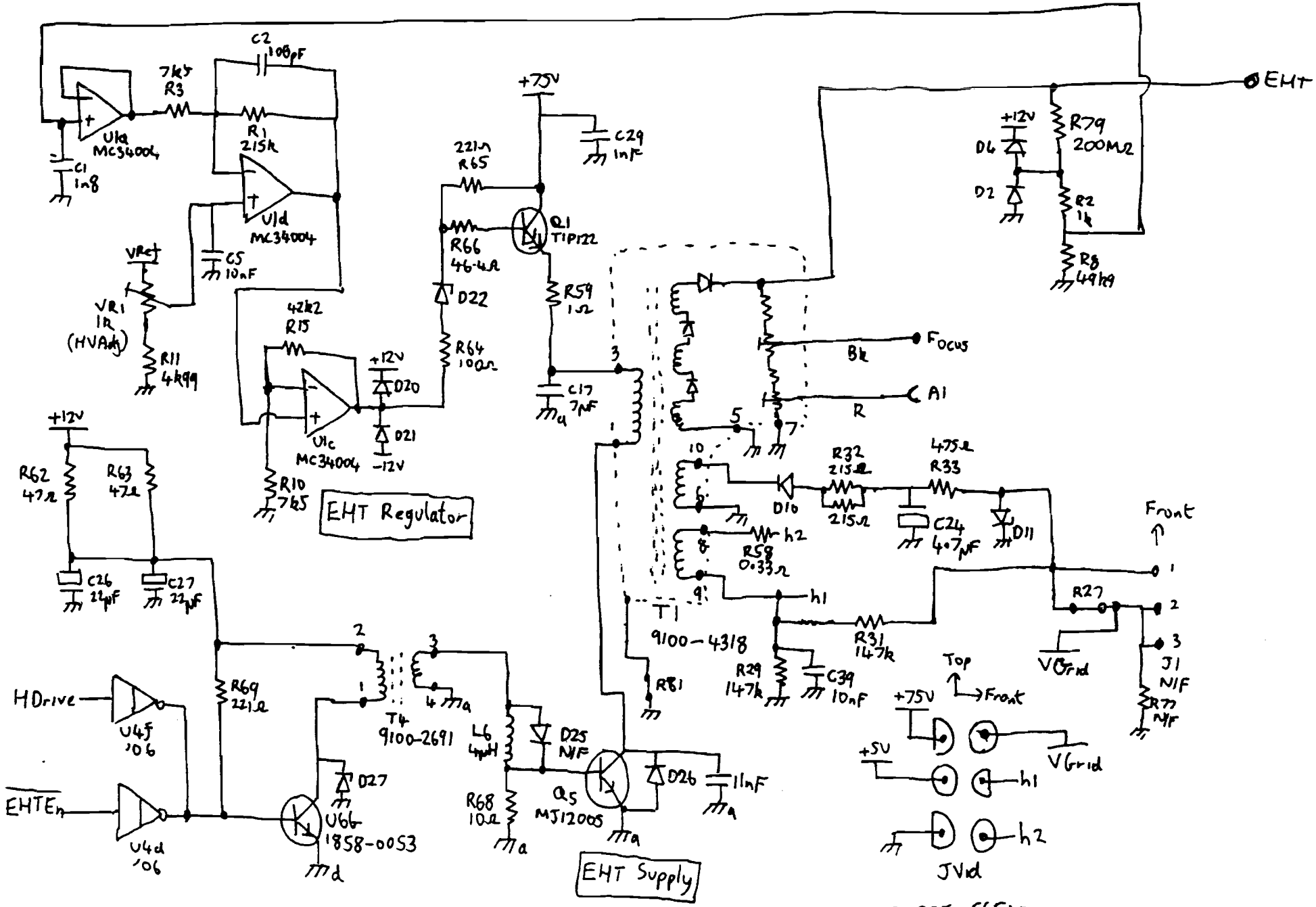

HP9836C Monitor Deflection PCB Sheet 2 09836-66540

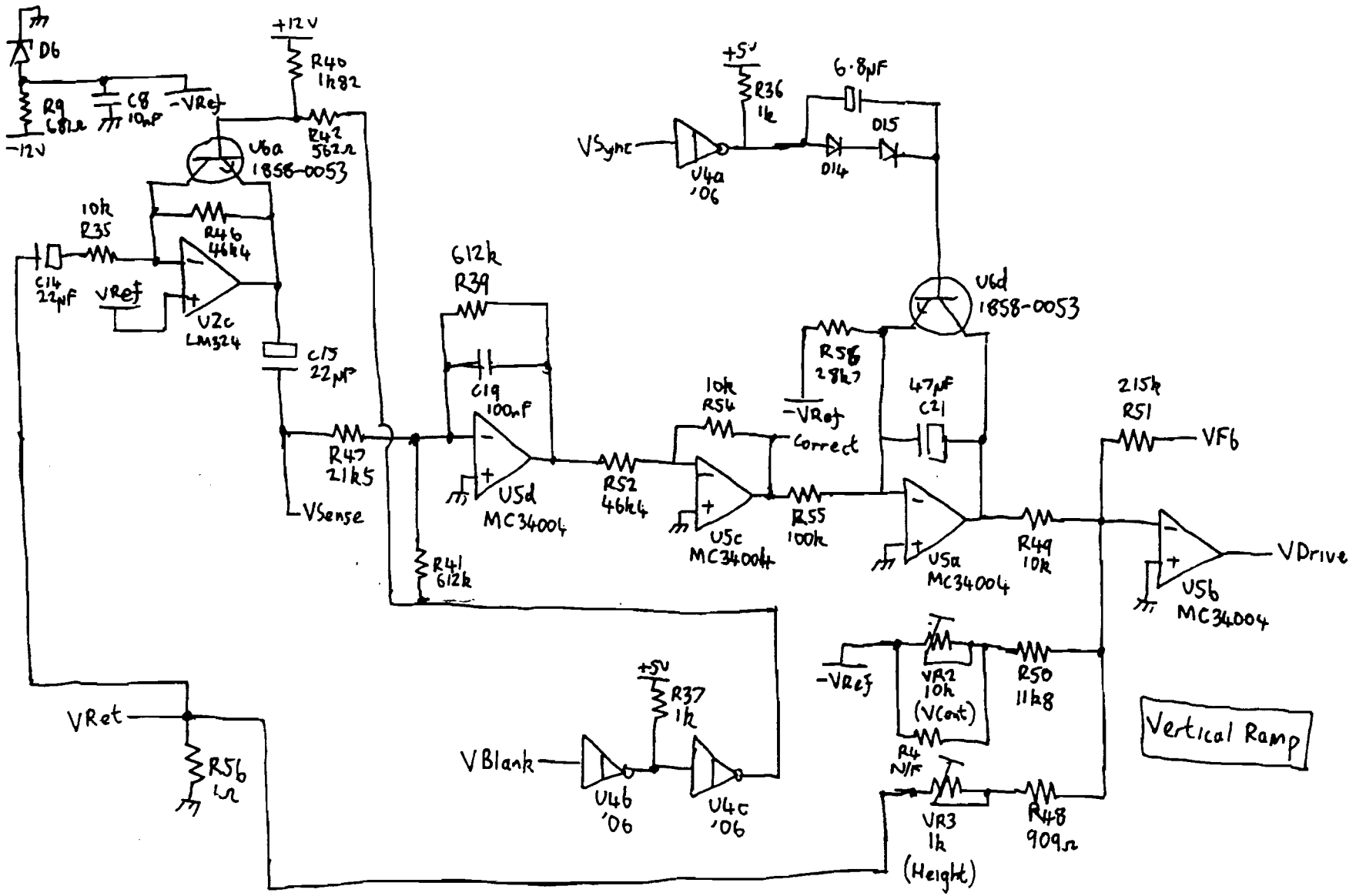

HP9836C Monitor Deflection PCB Sheet (3) 09836-66540

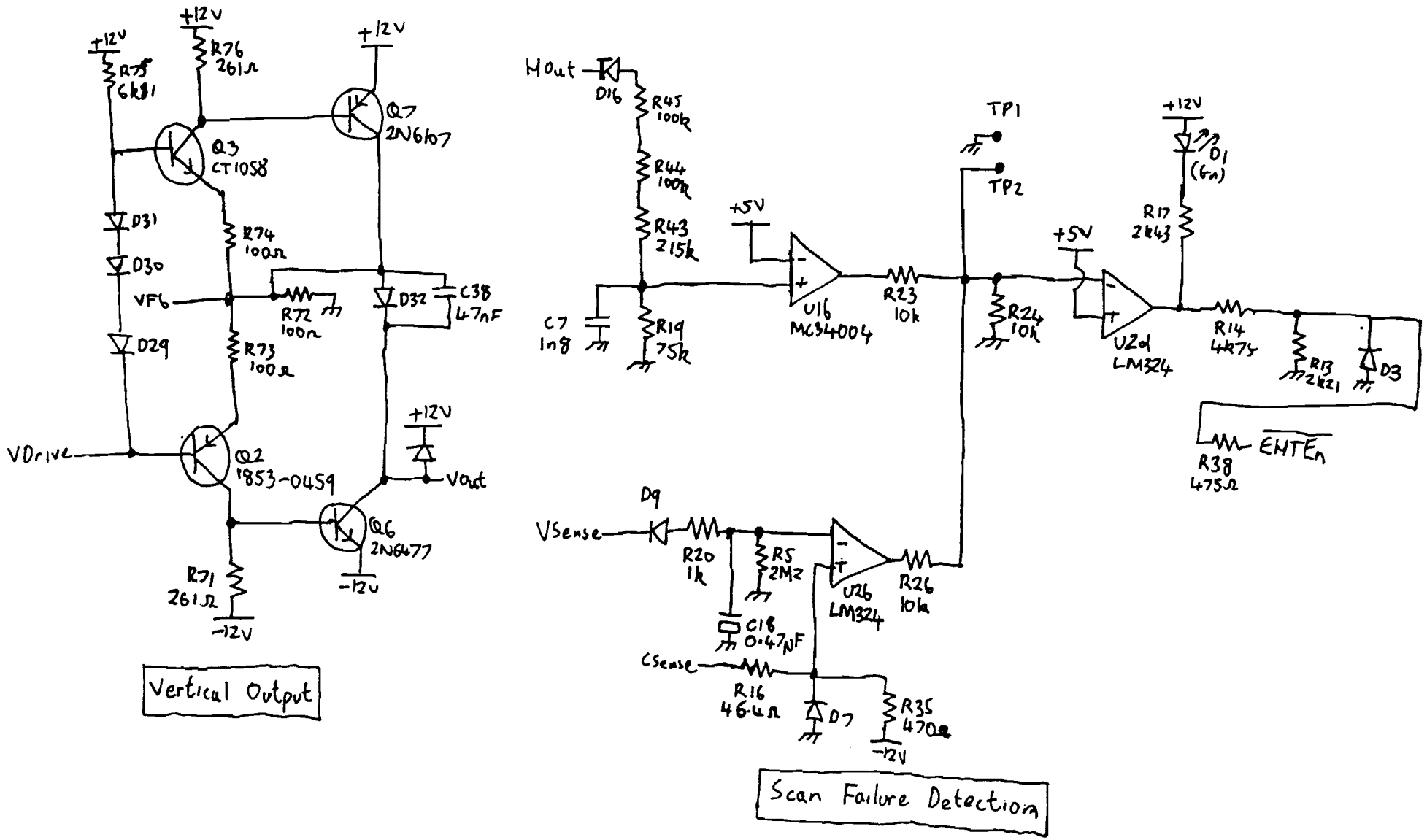

HP9836C Monitor Deflection PCB Sheet ④ 09836-66540

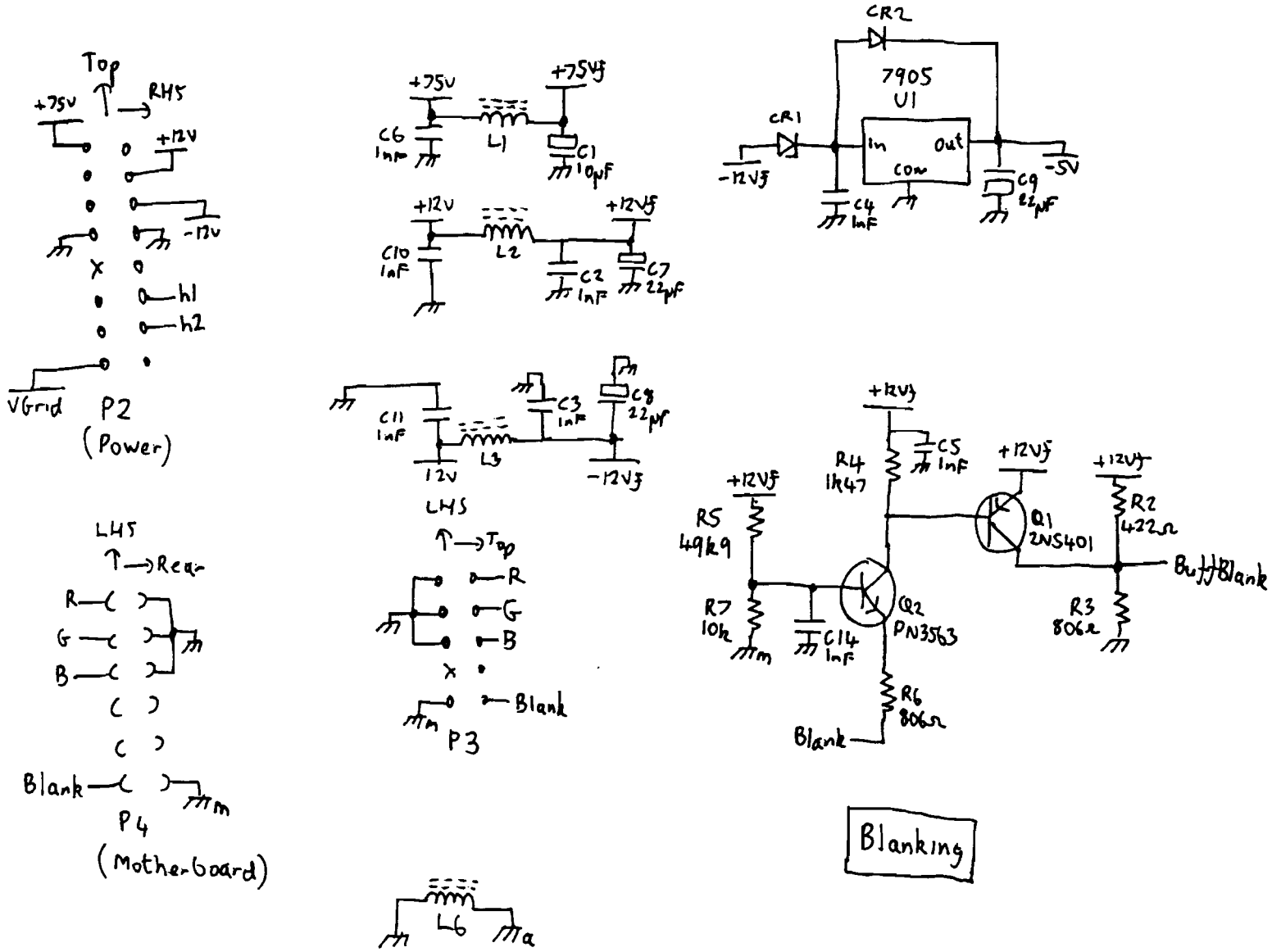

HP9836C Monitor Video PCB Sheet 1 09836-66542

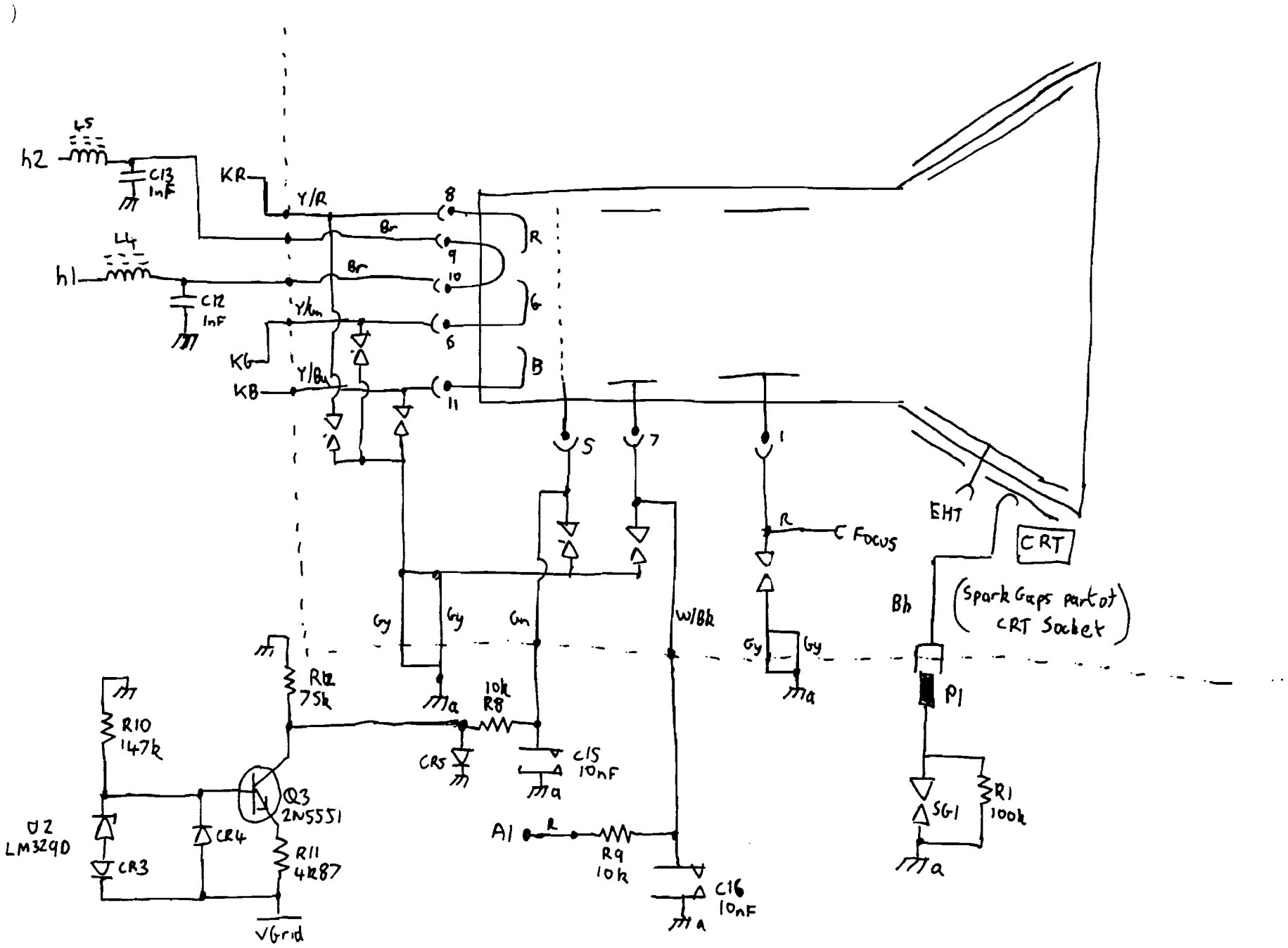

HP9836C Monitor Video PCB Sheet 2 09836 — 66542

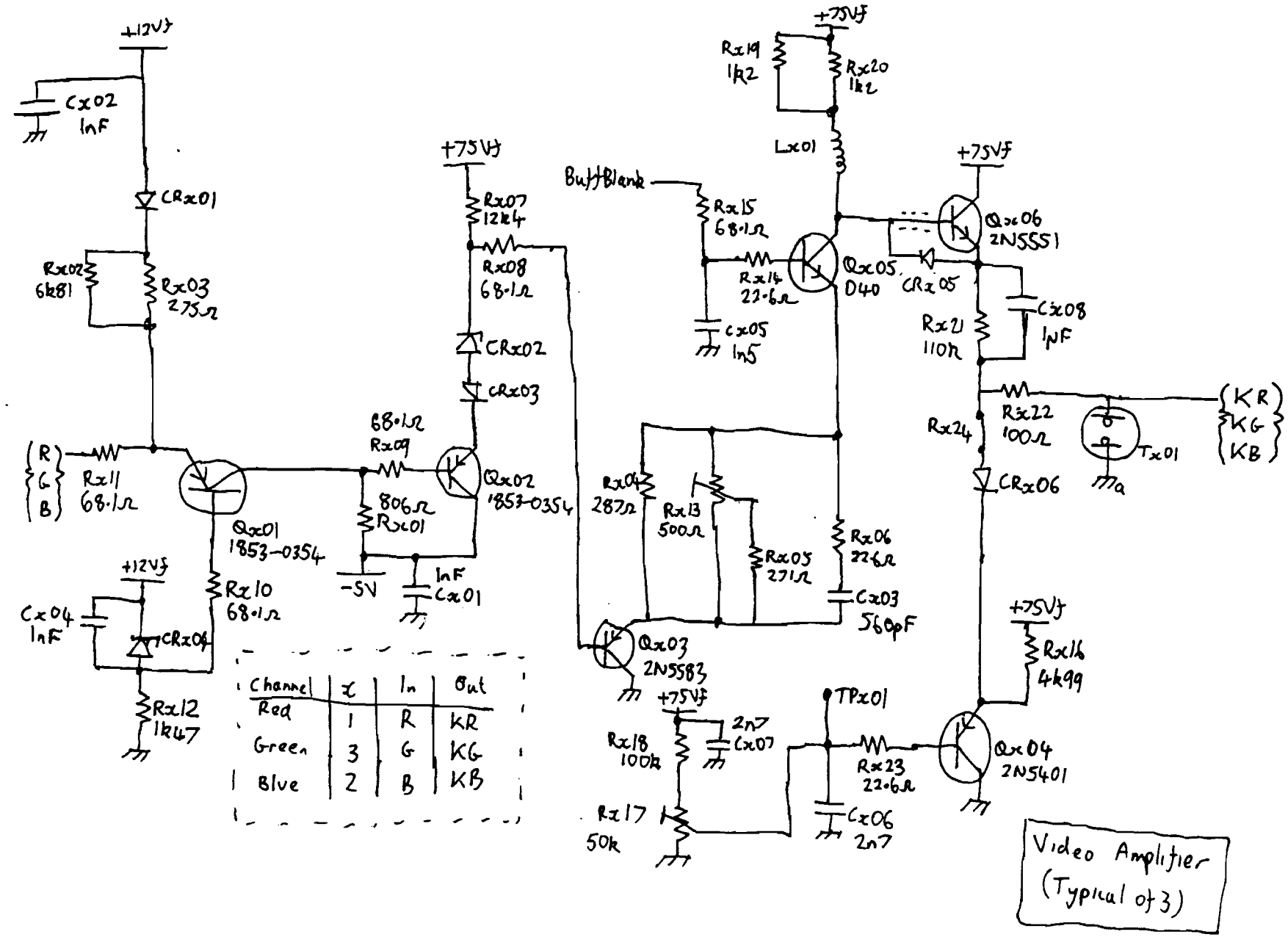

Channel	x	In	Out
Red	1	R	KR
Green	3	G	KG
Blue	2	B	KB

Video Amplifier (Typical of 3)

HP9836C Monitor Video PCB Sheet (3) 09836-66542