# HP9825 Memory Bus

| | 2 | 1 | |
|---|---|---|---|
| MAD8 | o | o | MAD0 |
| MAD9 | o | o | MAD1 |
| MAD10 | o | o | MAD2 |
| MAD11 | o | o | MAD3 |
| MAD12 | o | o | MAD4 |
| MAD13 | o | o | MAD5 |
| MAD14 | o | o | MAD6 |
| MAD15 | o | o | MAD7 |
| -12V | o | o | +12V |
| -5V | o | o | +12V |
| Rd | o | o | OptMxp |
| ROMSel | o | o | CartALE |
| $\overline{\text{SysOE}}$ | o | o | +5V |
| $\overline{\text{CartOE}}$ | o | o | +5V |
| MRdy | o | o | +5V |
| $\overline{\text{STM}}$ | o | o | Gnd |
| $\overline{\text{Wr}}$ | o | o | Gnd |
| Memclk | o | o | Gnd |
| Word | o | o | Gnd |
| +7.5V | o | o | Gnd |
| | 40 | 39 | |

# HP9825 Ext Ctrl

| 2 | | 1 | |
|---|---|---|---|
| Gnd | o | o | Bø1 |
| Gnd | o | o | Bø2 |
| Gnd | o | o | $\overline{Rst}$ |
| Gnd | o | o | CPU28 |
| Gnd | o | o | MAD8 |
| Gnd | o | o | MAD9 |
| Gnd | o | o | MAD10 |
| Gnd | o | o | MAD11 |
| Gnd | o | o | MAD12 |
| Gnd | o | o | MAD13 |
| KLSel | o | o | MAD14 |
| CPU81 | o | o | MAD15 |
| DMapClk | o | o | MAD7 |
| $\overline{Inta}$ | o | o | MAD6 |
| $\overline{ALEEn}$ | o | o | MAD5 |
| $\overline{CPUW_r}$ | o | o | MAD4 |
| $\overline{CPUSTM}$ | o | o | MAD3 |
| D2MapClk | o | o | MAD2 |
| $\overline{STMa}$ | o | o | MAD1 |
| $\overline{MADD_{15}}$ | o | o | MAD0 |

# HP9825 I/O Bus

| | 1 | 2 | |
|---|---|---|---|
| $\overline{IOD0}$ | • | o | $\overline{IOD8}$ |
| $\overline{IOD1}$ | o | o | $\overline{IOD9}$ |
| $\overline{IOD2}$ | o | o | $\overline{IOD10}$ |
| $\overline{IOD3}$ | o | o | $\overline{IOD11}$ |
| $\overline{IOD4}$ | o | o | $\overline{IOD12}$ |
| $\overline{IOD5}$ | o | o | $\overline{IOD13}$ |
| $\overline{IOD6}$ | o | o | $\overline{IOD14}$ |
| $\overline{IOD7}$ | o | o | $\overline{IOD15}$ |
| $\overline{PA3}$ | o | • | $\overline{FLG}$ |
| $\overline{PA2}$ | o | o | $\overline{STS}$ |
| $\overline{PA1}$ | o | • | $\overline{IC2}$ |
| $\overline{PA0}$ | o | o | $\overline{IC1}$ |
| -12V | o | • | $\overline{IRH}$ |
| +12V | o | o | $\overline{IRL}$ |
| +5V | o | • | $\overline{Int}$ |
| +5V | o | o | $\overline{Dout}$ |
| Gnd | o | • | $\overline{IOSB}$ |
| Gnd | o | o | $\overline{DMAR}$ |
| Gnd | o | • | $\overline{Init}$ |
| I/Oclk | • | o | $\overline{Rst}$ |
| | 39 | | 40 |

# HP9825 Interface slot

| | | | |
|---|---|---|---|
| Gnd | C1 | A | +5V |
| $\overline{IOD0}$ | C2 | B | $\overline{IOD1}$ |
| $\overline{IOD2}$ | C3 | C | $\overline{IOD3}$ |
| $\overline{IOD4}$ | C4 | D | $\overline{IOD5}$ |
| $\overline{IOD6}$ | C5 | E | $\overline{IOD7}$ |
| $\overline{IOD8}$ | C6 | F | $\overline{IOD9}$ |
| $\overline{IOD10}$ | C7 | H | $\overline{IOD11}$ |
| $\overline{IOD12}$ | C8 | J | $\overline{IOD13}$ |
| $\overline{IOD14}$ | C9 | K | $\overline{IOD15}$ |
| $\overline{Int}$ | C10 | L | $\overline{Init}$ |
| $\overline{IRH}$ | C11 | M | $\overline{FLG}$ |
| $\overline{IRL}$ | C12 | N | $\overline{STS}$ |
| $\overline{PA0}$ | C13 | P | $\overline{IC1}$ |
| $\overline{PA1}$ | C14 | R | $\overline{IC2}$ |
| $\overline{PA2}$ | C15 | S | $\overline{IOSB}$ |
| $\overline{PA3}$ | C16 | T | $\overline{Dout}$ |
| Shield | C17 | U | $\overline{DMAR}$ |
| +12V | C18 | V | −12V |

## HP9825 ROM Cartridge slot

| | |
|---|---|
| | $\overline{Wr}$ |
| | Word |
| -5V | +12V |
| +5V | Gnd |
| MAD0 | ALE |
| MAD2 | MAD1 |
| MAD4 | MAD3 |
| MAD6 | MAD5 |
| MAD8 | MAD7 |
| MAD10 | MAD9 |
| MAD12 | MAD11 |
| MAD14 | MAD13 |
| $\overline{CartOE}$ | MAD15 |

## HP9825 System ROM slot

| | |
|---|---|
| MAD14 | MAD15 |
| MAD12 | MAD13 |
| MAD10 | MAD11 |
| MAD8 | MAD9 |
| MAD1 | MAD0 |
| MAD3 | MAD2 |
| MAD5 | MAD4 |
| MAD7 | MAD6 |
| Rd | $\overline{SysOE}$ |
| ALE | +7.5V |
| | Gnd |
| | Gnd |
| | Gnd |
| -5V | Gnd |
| +12V | +5V |

## HP9825 Keyboard Connectors

| | | |
|---|---|---|
| C14 | C1 | > LED |
| C15 | C | > |
| R0 | C | > Lock |
| R1 | C | > Shift |
| R2 | C | > Reset |
| R3 | C | > Gnd |
| R4 | C | > R7 |
| R5 | C | > R6 |

| | | |
|---|---|---|
| C0 | C1 | > C13 |
| C1 | C | > C12 |
| C2 | C | > C11 |
| C3 | C | > C10 |
| C4 | C | > C9 |
| C5 | C | > C8 |
| C6 | C | > C7 |

## HP9825 Display Connector

| | | |
|---|---|---|
| C4 | C1 | > +5V |
| C2 | C | > C3 |
| C0 | C | > C1 |
| Cfg | C | > RunLED |
| Gnd | C | > +5V |
| Gnd | C | > Sel Data |
| Gnd | C | > Sel Clk |

## HP 16k bit ROM

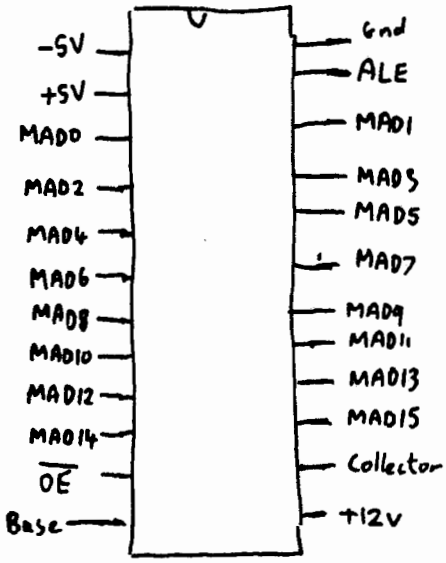


## Octal Inverting Bus Transceiver

1820-1584

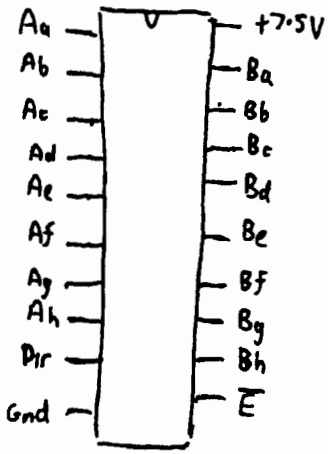


| Dir | $\overline{E}$ | |
|---|---|---|
| X | H | High Z A, B |
| H | L | B → A |
| L | L | A → B |

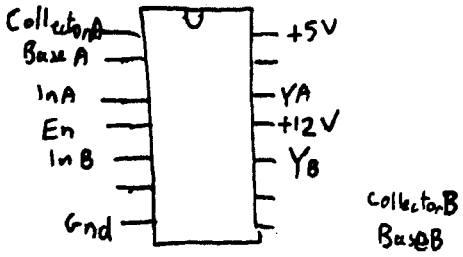
Collector A
Base A
In A
En
In B
Gnd
+5V
YA
+12V
YB
Collector B
Base B

75322

HP 1990-0553 Display

(Top View)

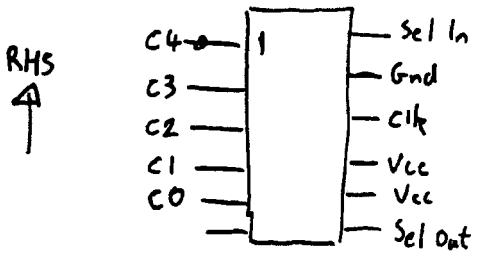

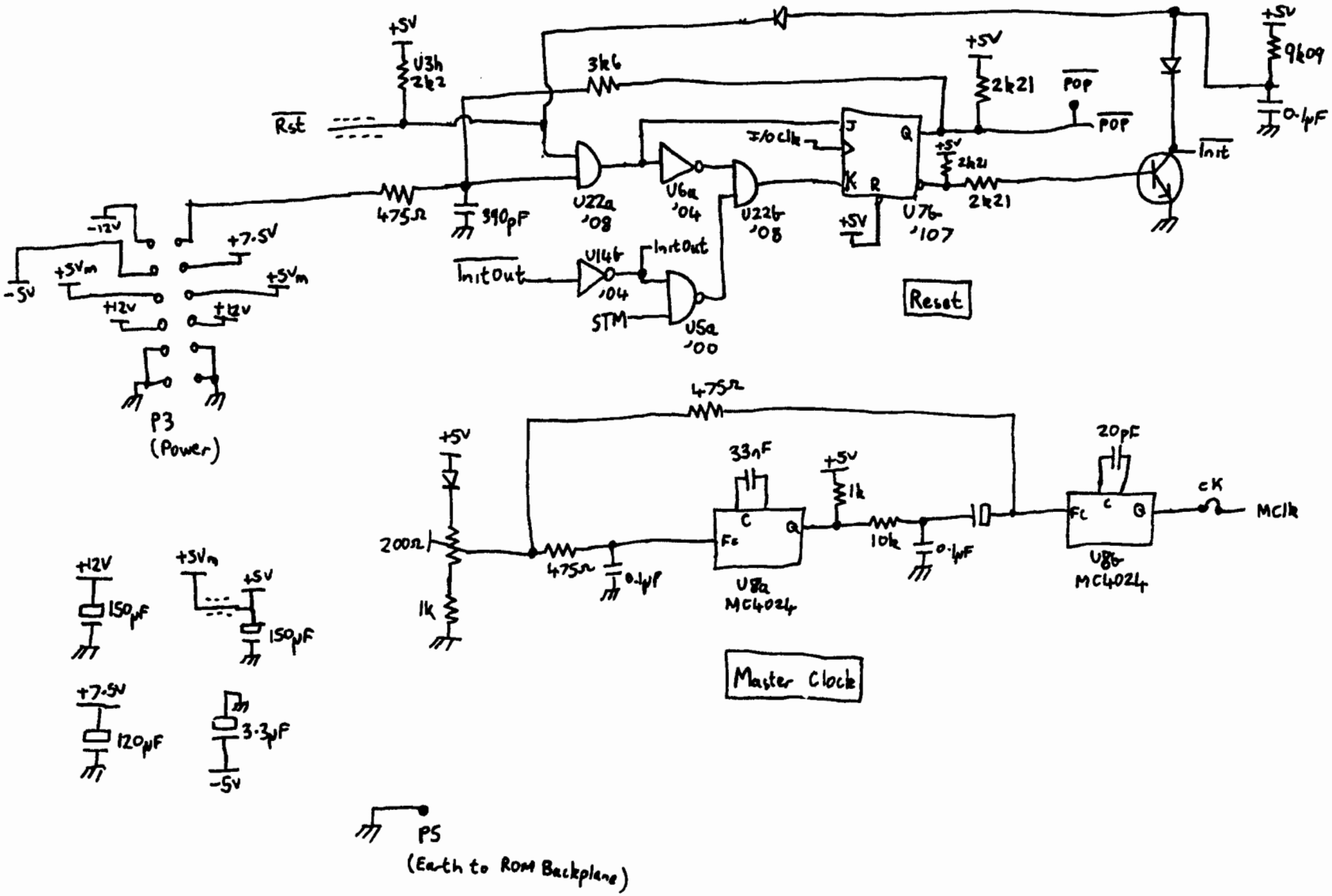


09825-66511
09825-69517

HP9825 CPU PCB Sheet ①

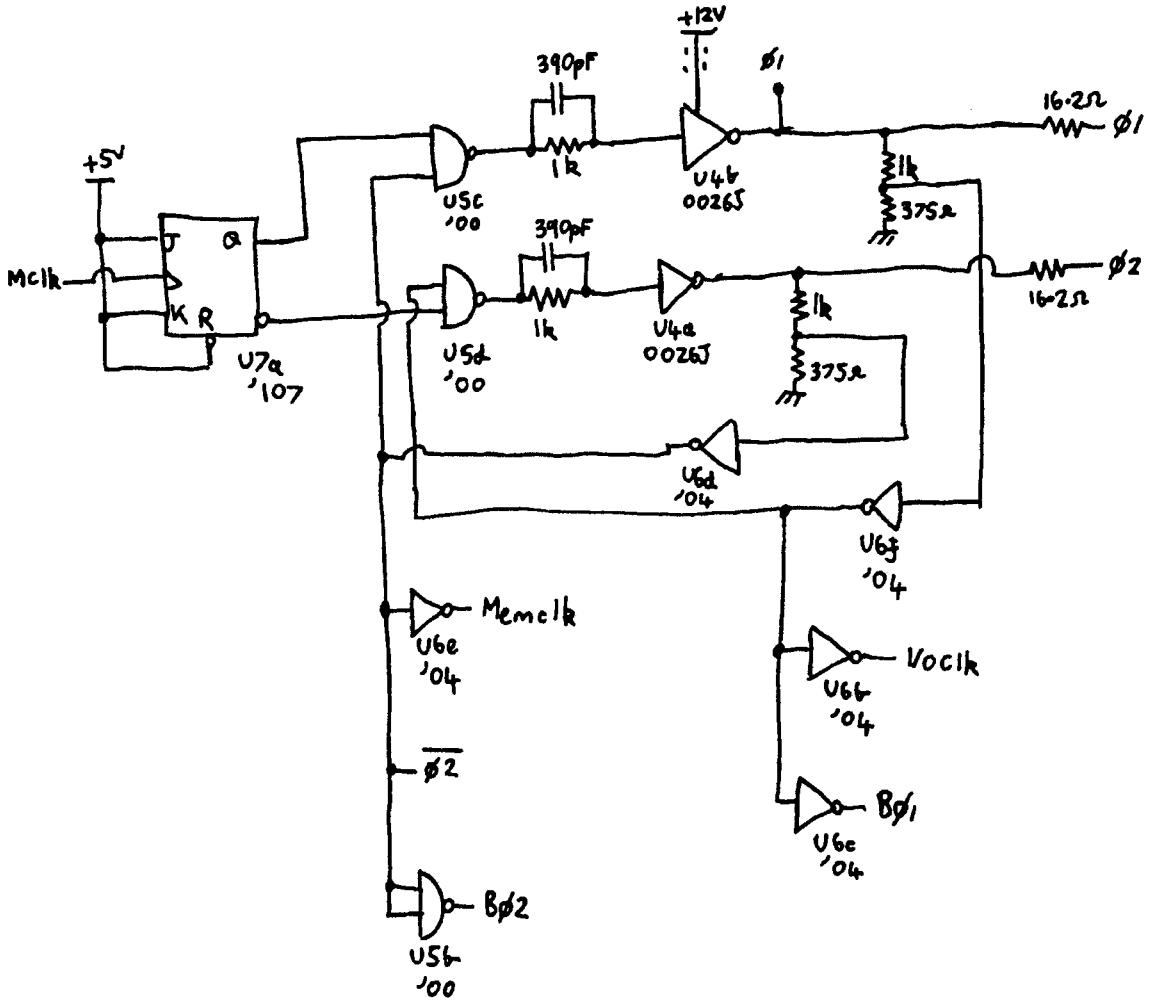


CPU Clock

HP9825 CPU PCB Sheet 2

09825-66511
09825-69517

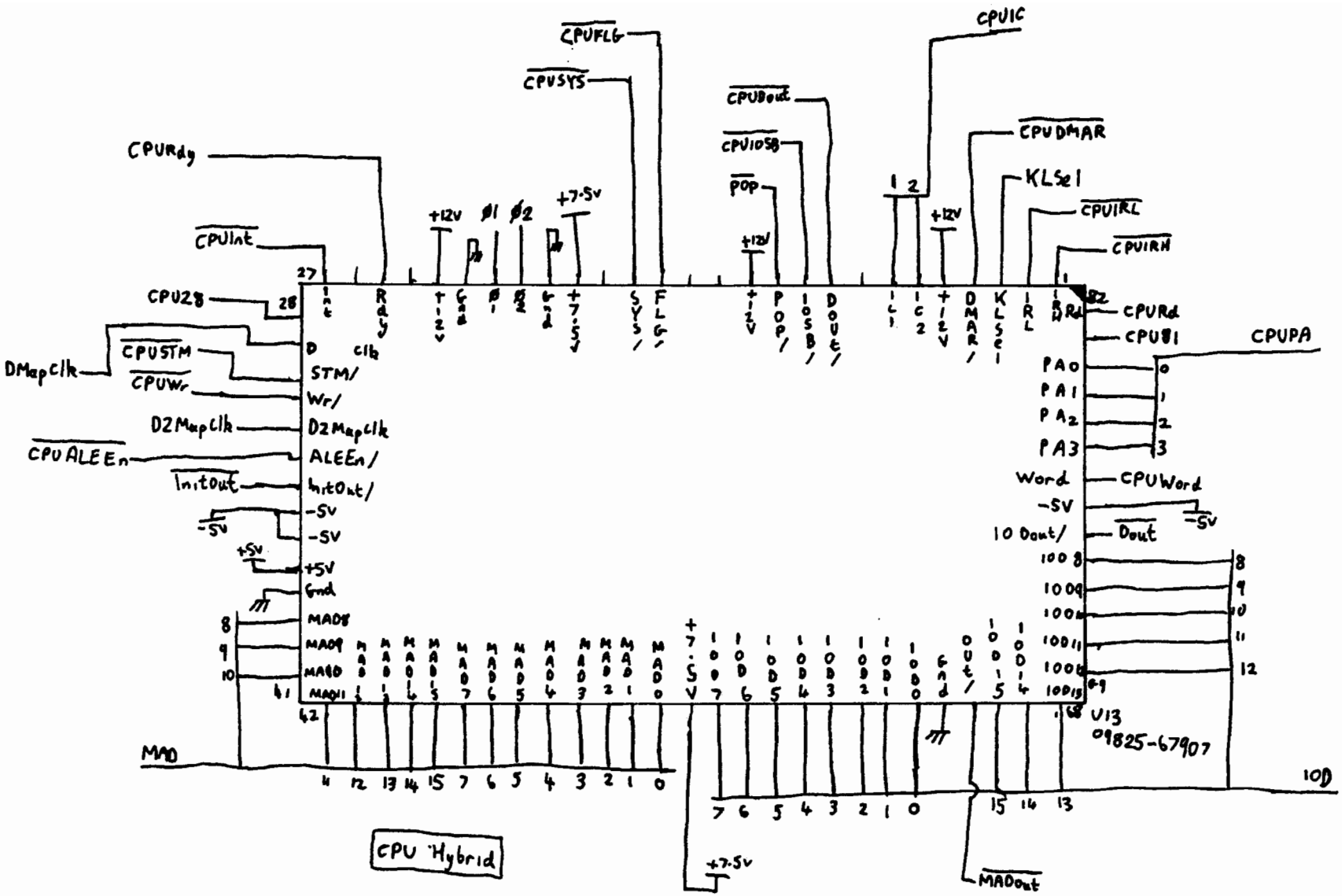


09825-66511
09825-69517

HP9825 CPU PCB Sheet 3

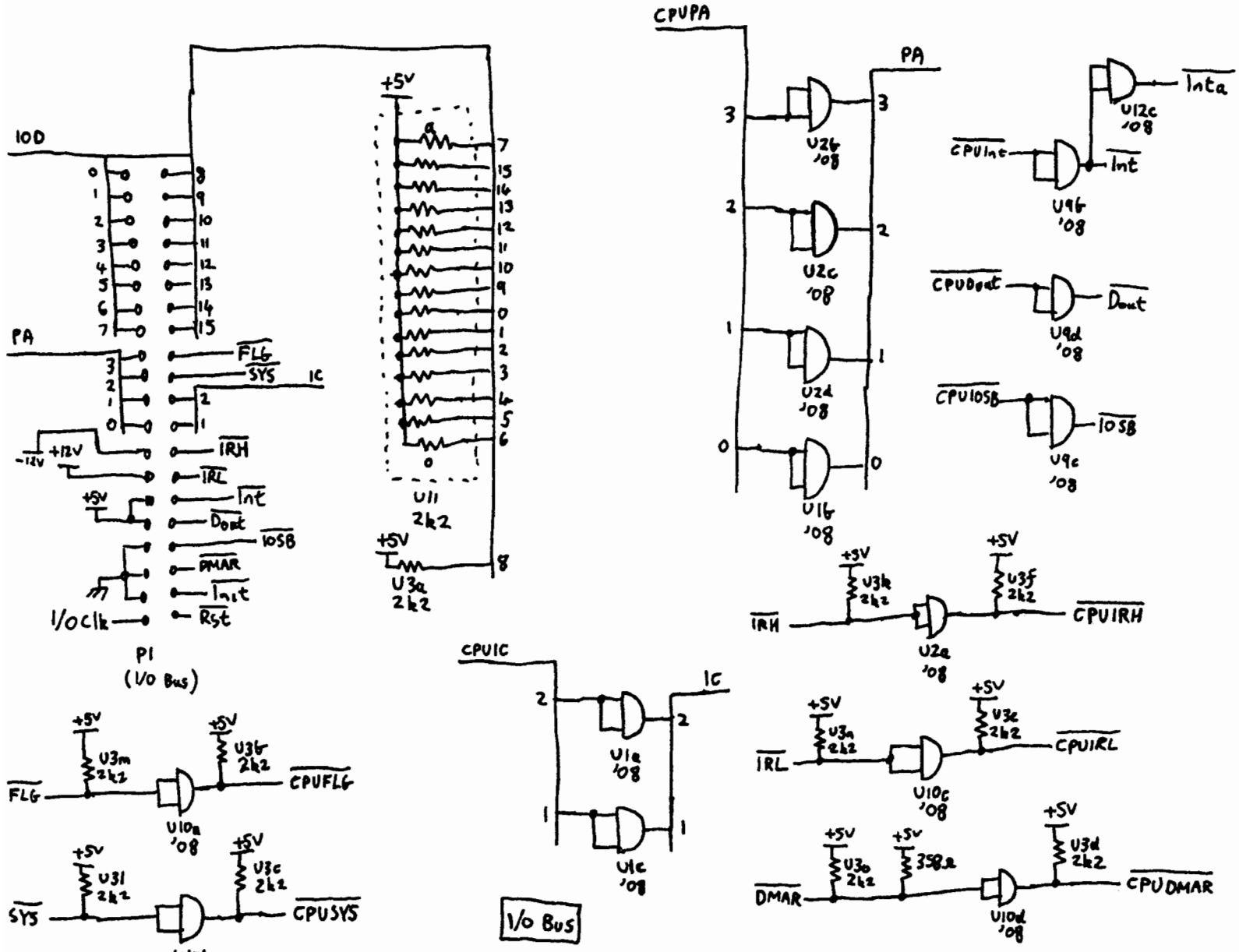


HP9825 CPU PCB Sheet 4

09825-66511
09825-69517

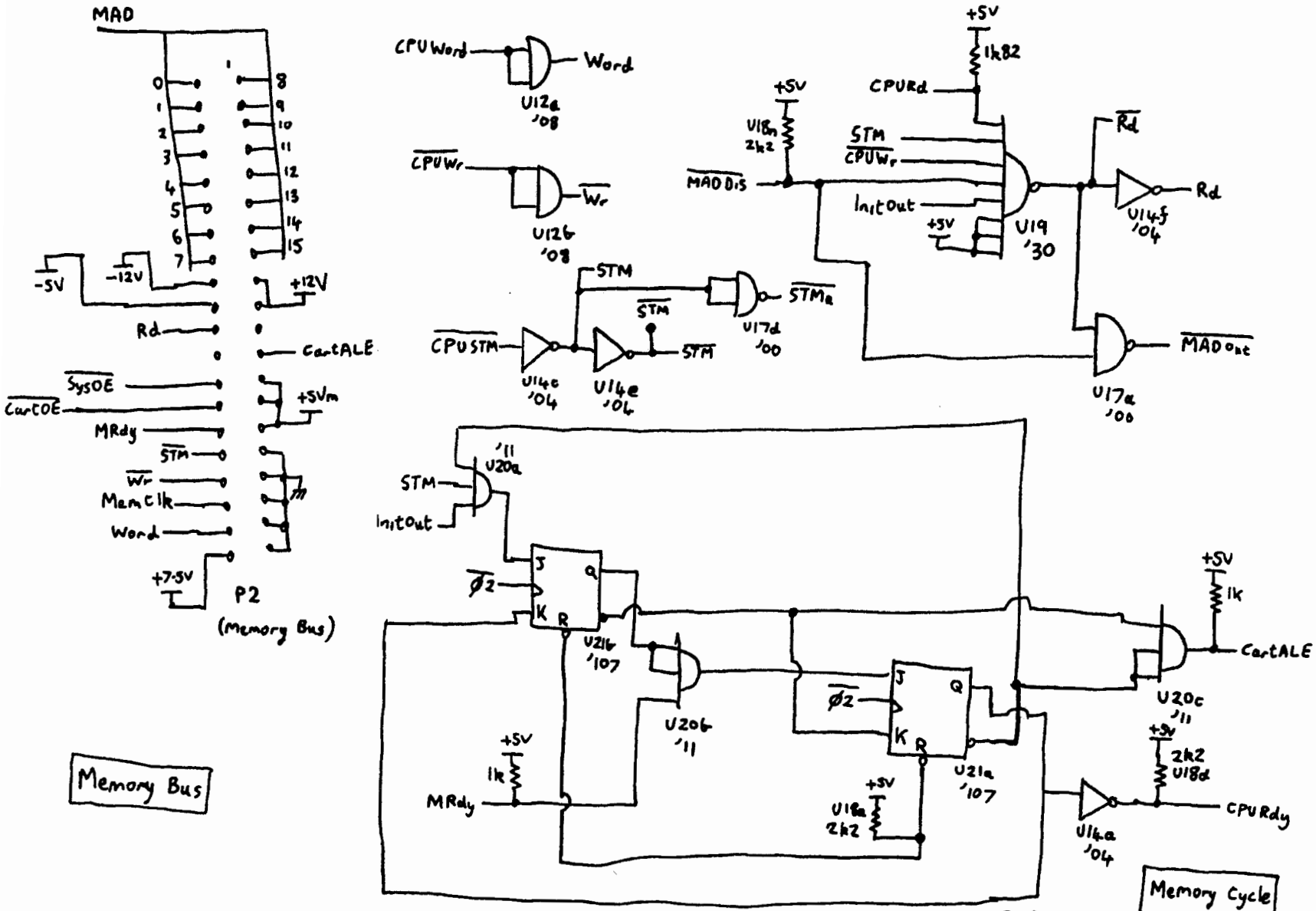


HP9825 CPU PCB Sheet 5

09825-66511
09825-69517

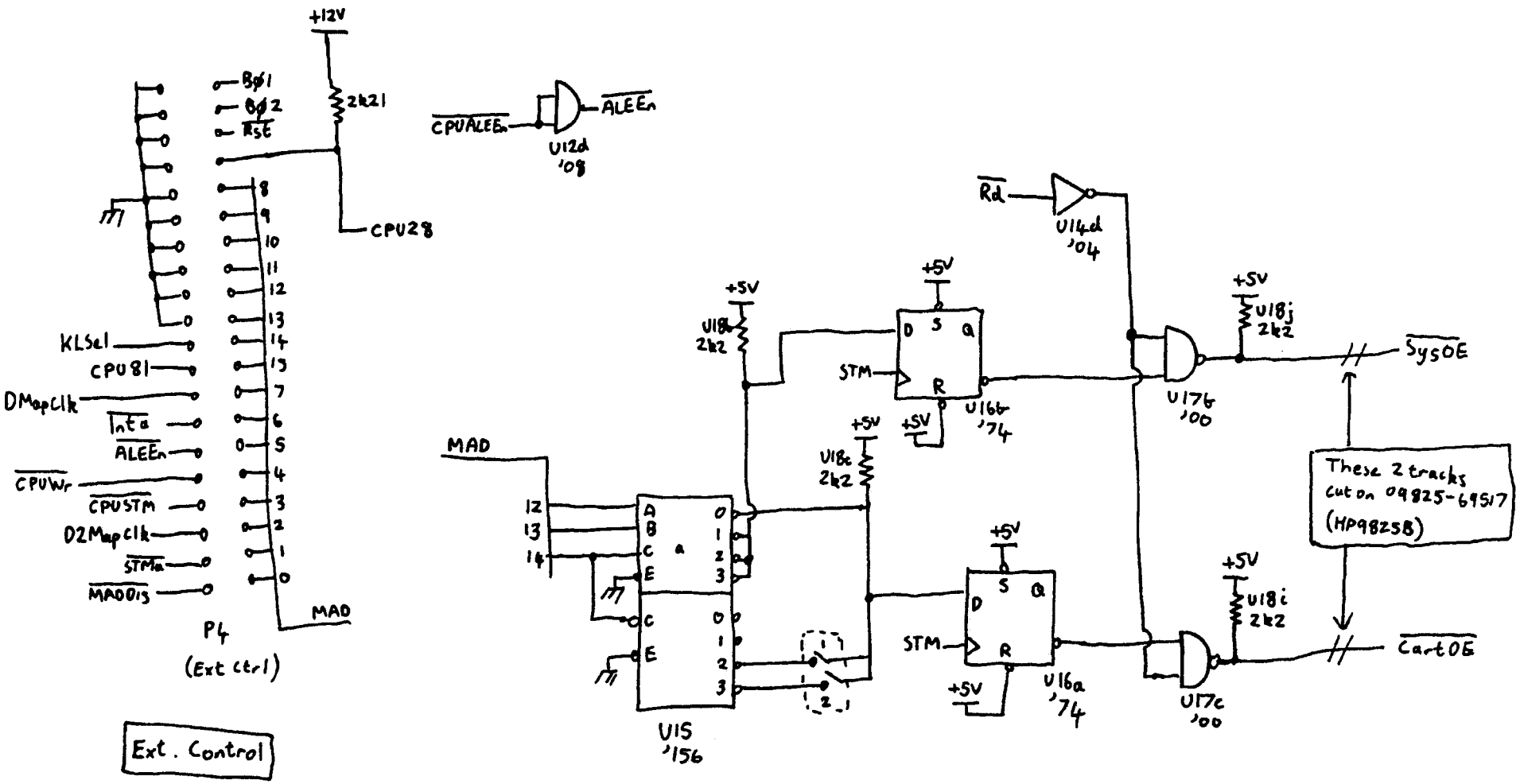


09825-66511
09825-69517

HP9825 CPU PCB Sheet 6

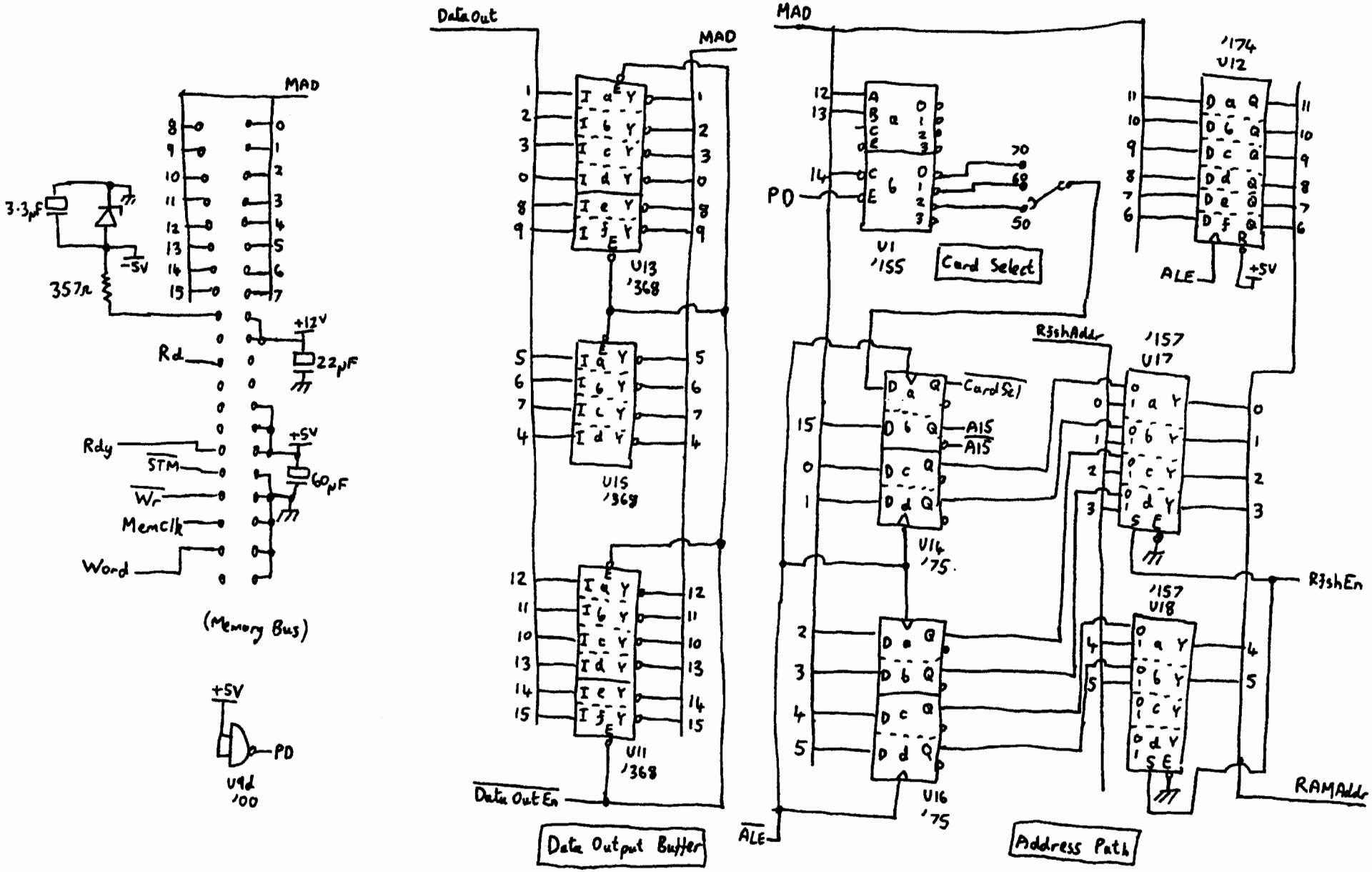


HP9825 8K RAM PCB Sheet 1 09825-66522

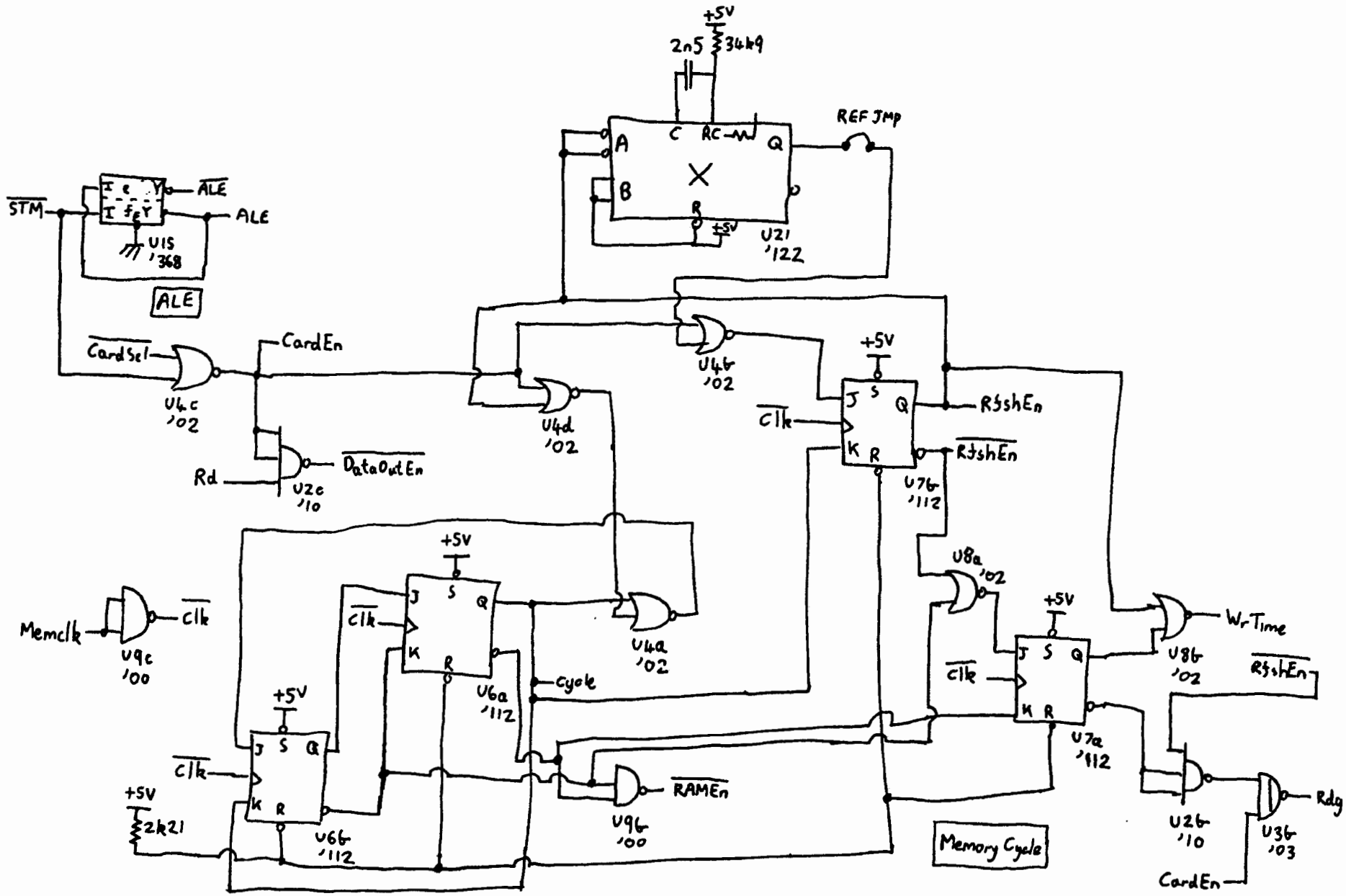


HP9825 8K RAM PCB Sheet ② 09825-66522

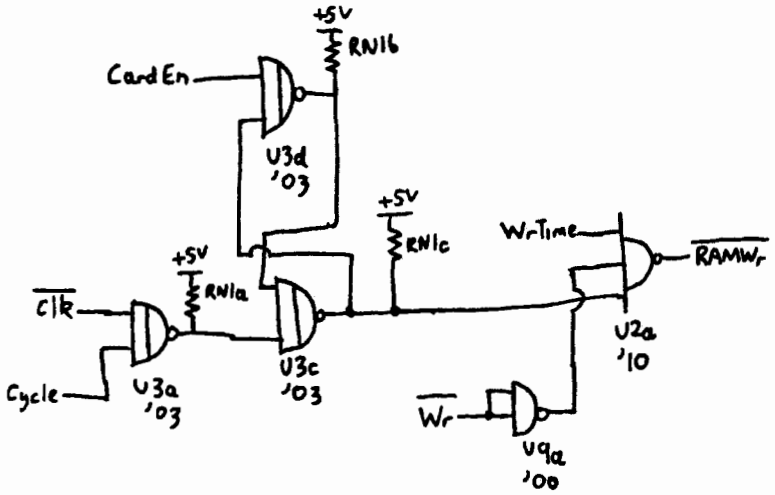


Write

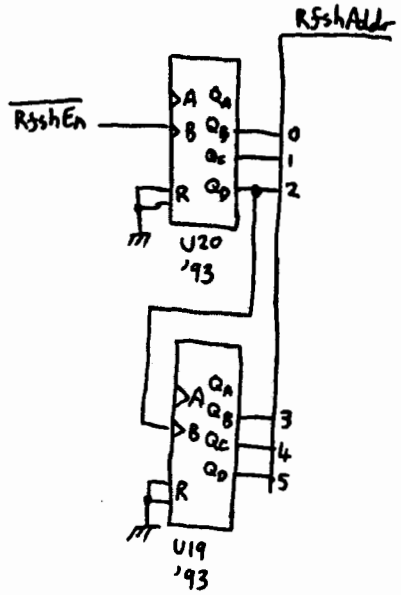


Refresh Address

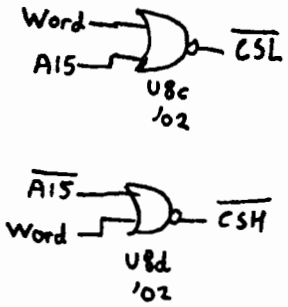


Byte Select

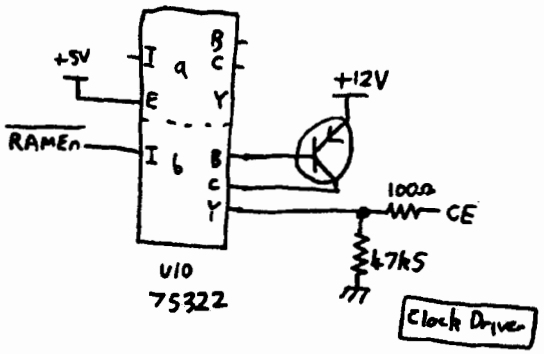


Clock Driver

HP 9825 8K RAM PCB Sheet 3 09825-66522

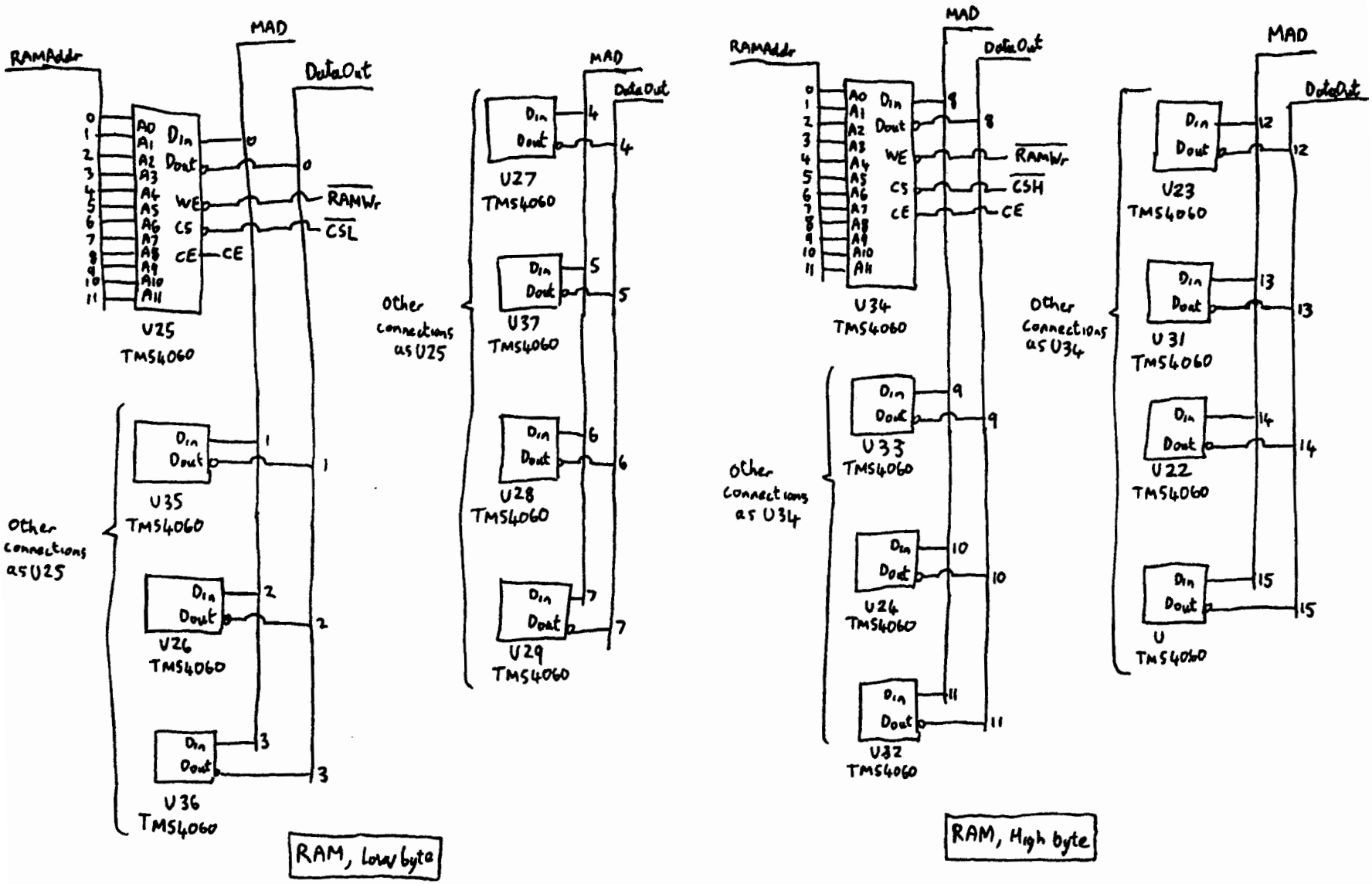


HP9825 8K RAM PCB Sheet 4

09825-66522

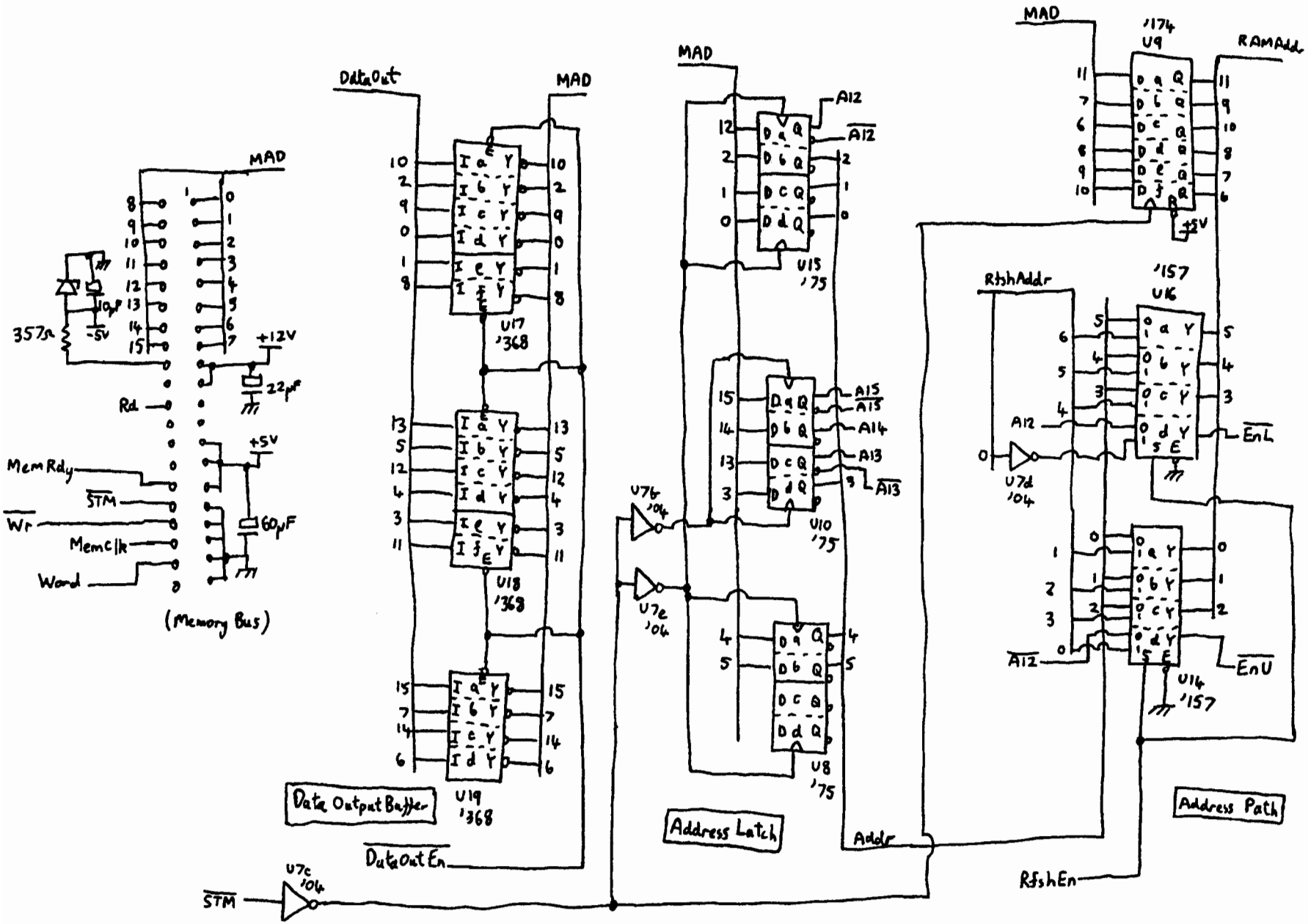


HP 9825 16K RAM PCB Sheet 1 09825-66523

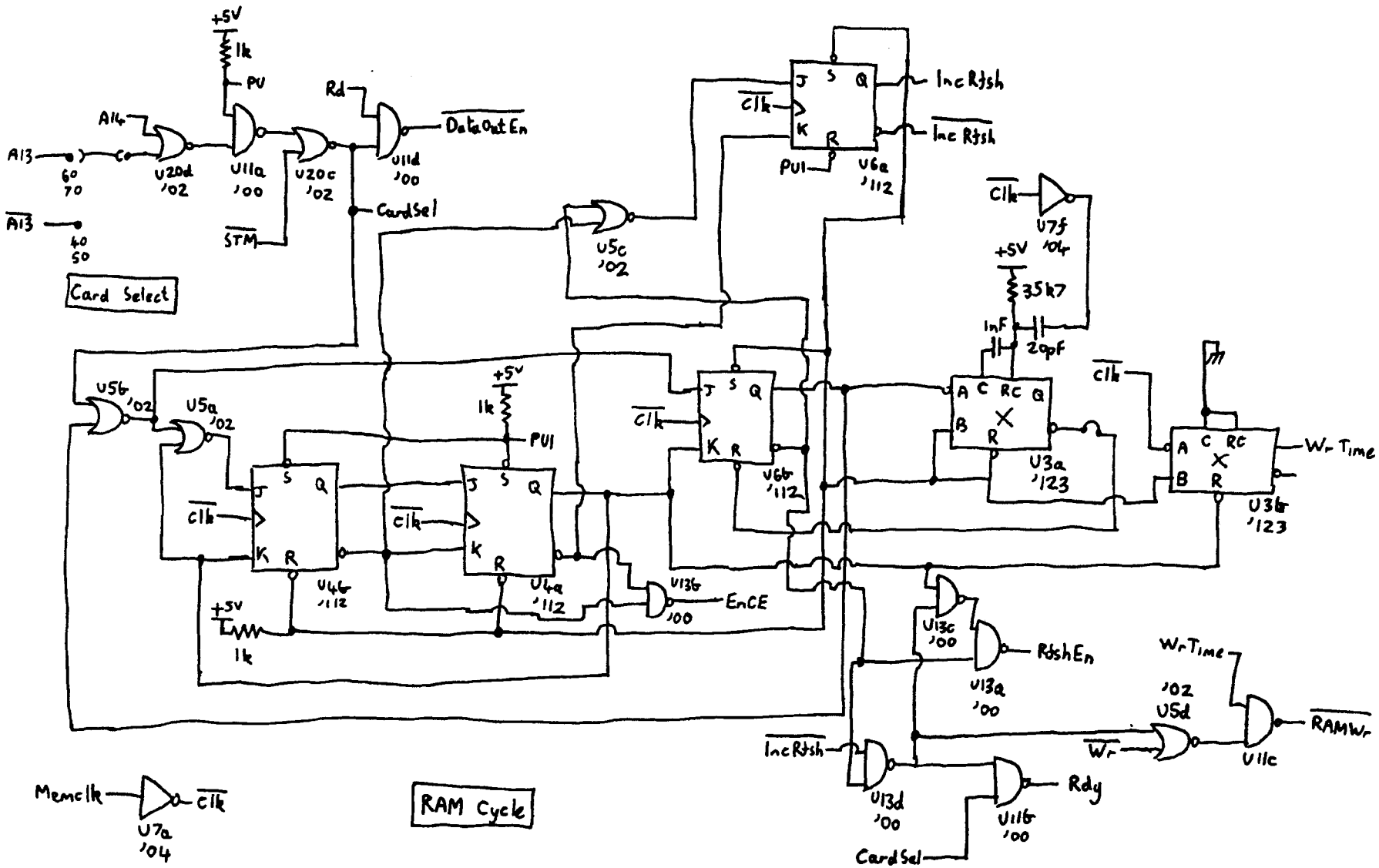


HP 9825 16K RAM PCB Sheet 2

09825-66523

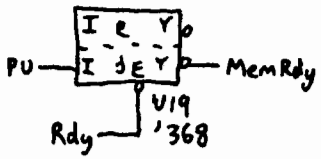


Ready Output

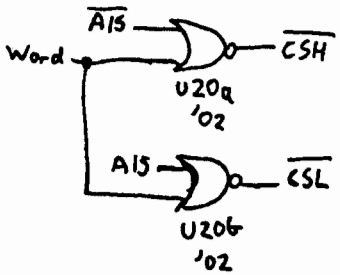


Byte Select

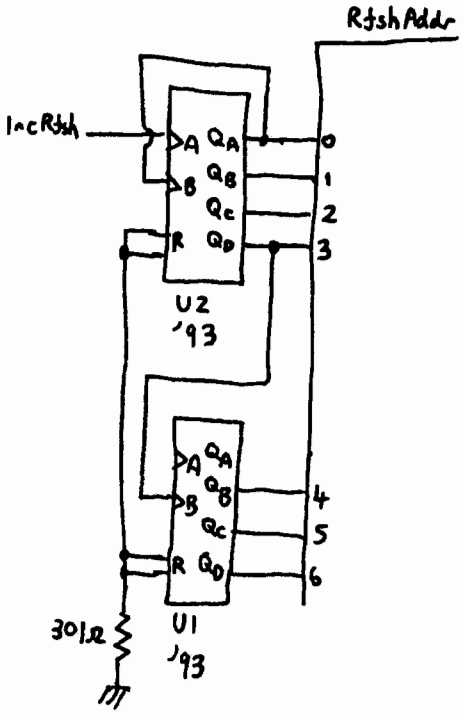


Refresh Address

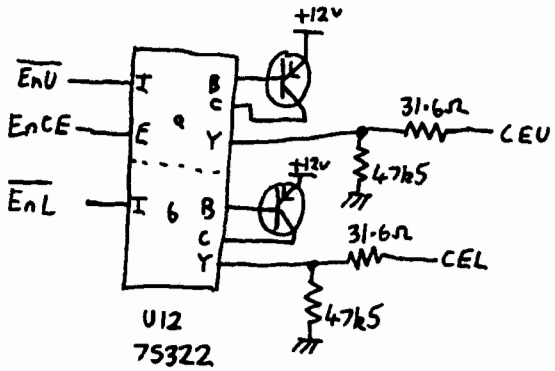


Clock Driver

HP9825 16K RAM PCB Sheet 3 09825-66523

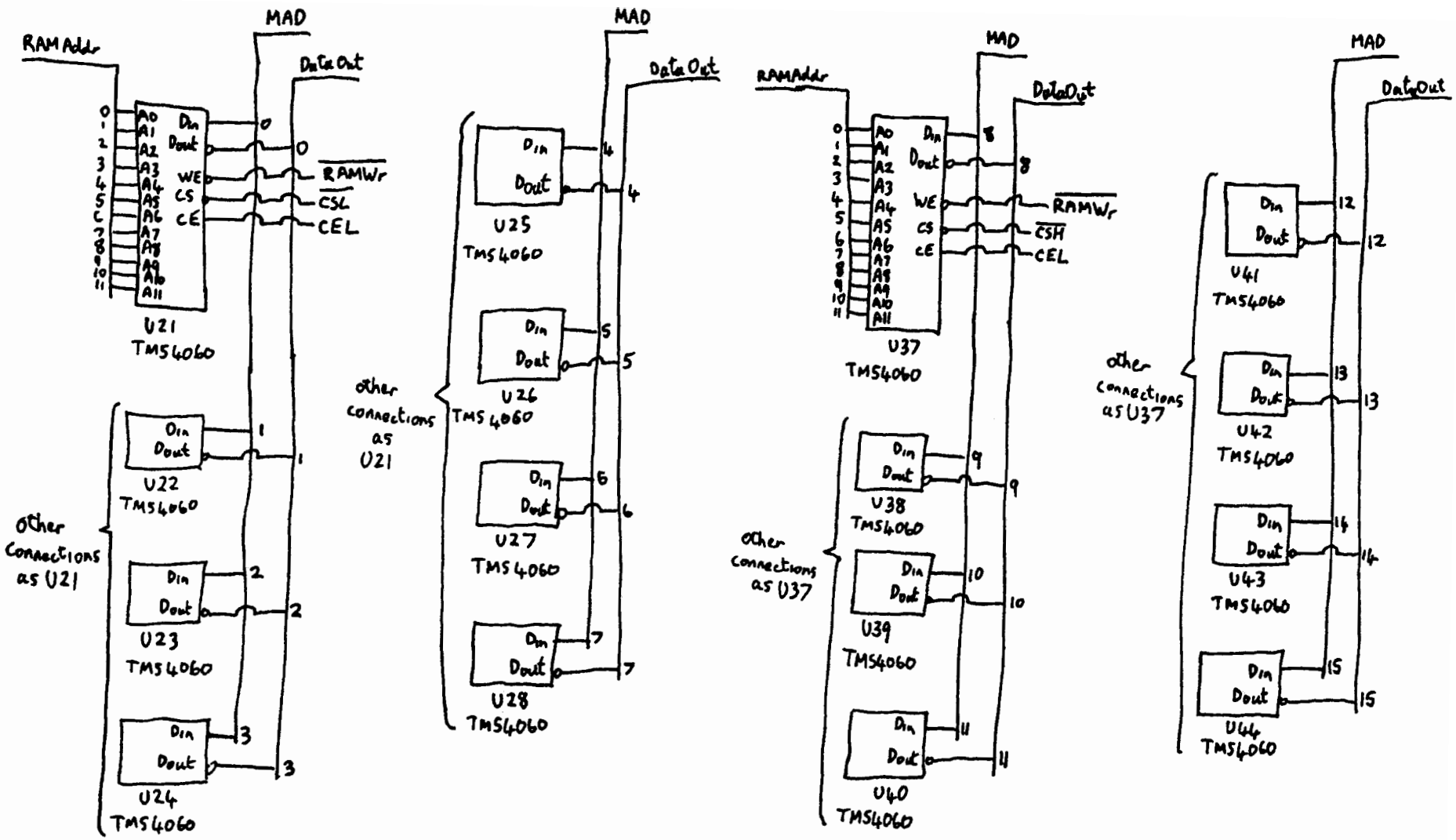


RAM, low bank

HP9825 16K RAM PCB Sheet 4 09825-66523

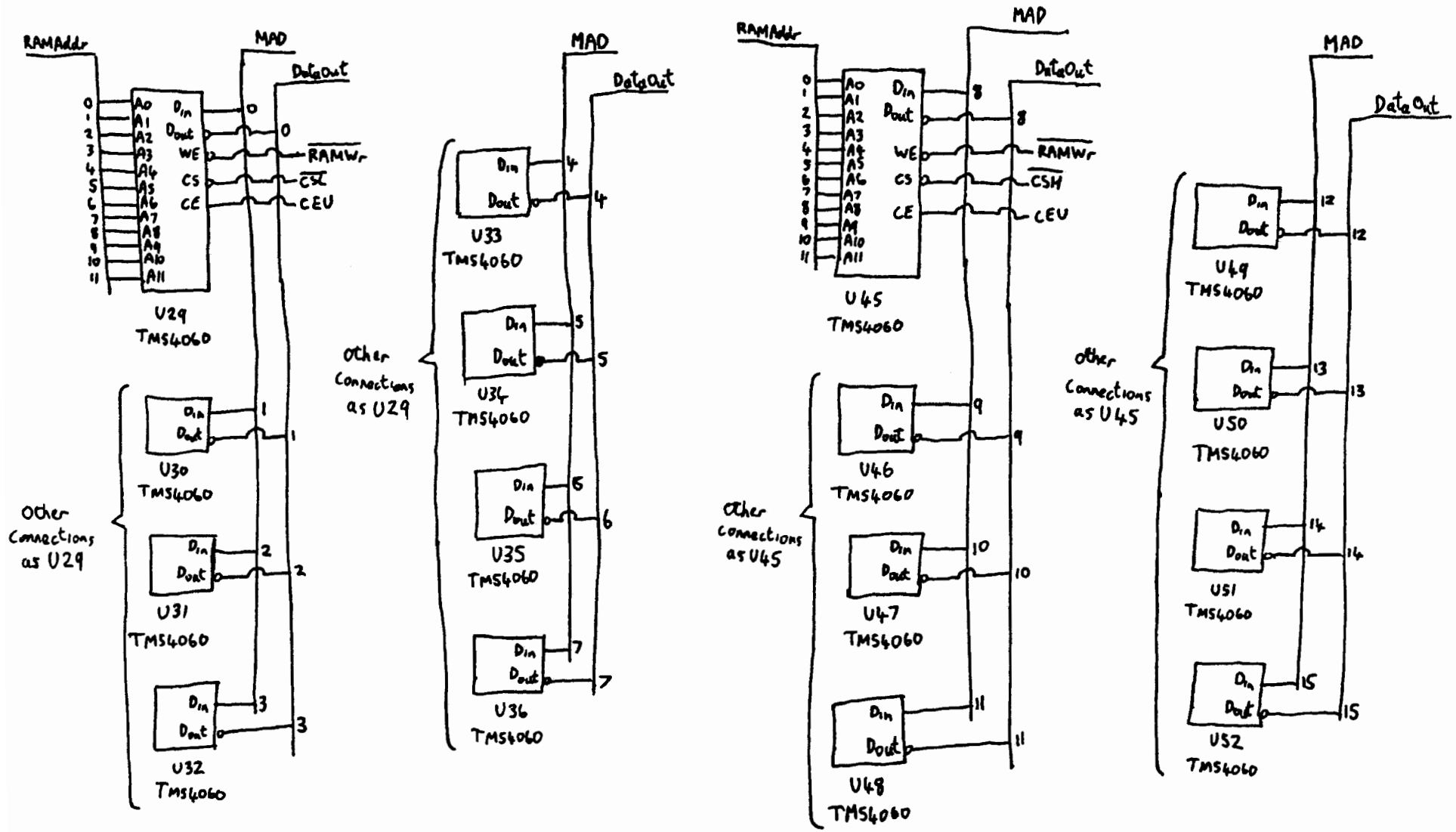


RAM, upper bank

HP9825 16K RAM PCB Sheet 5 09825-66523

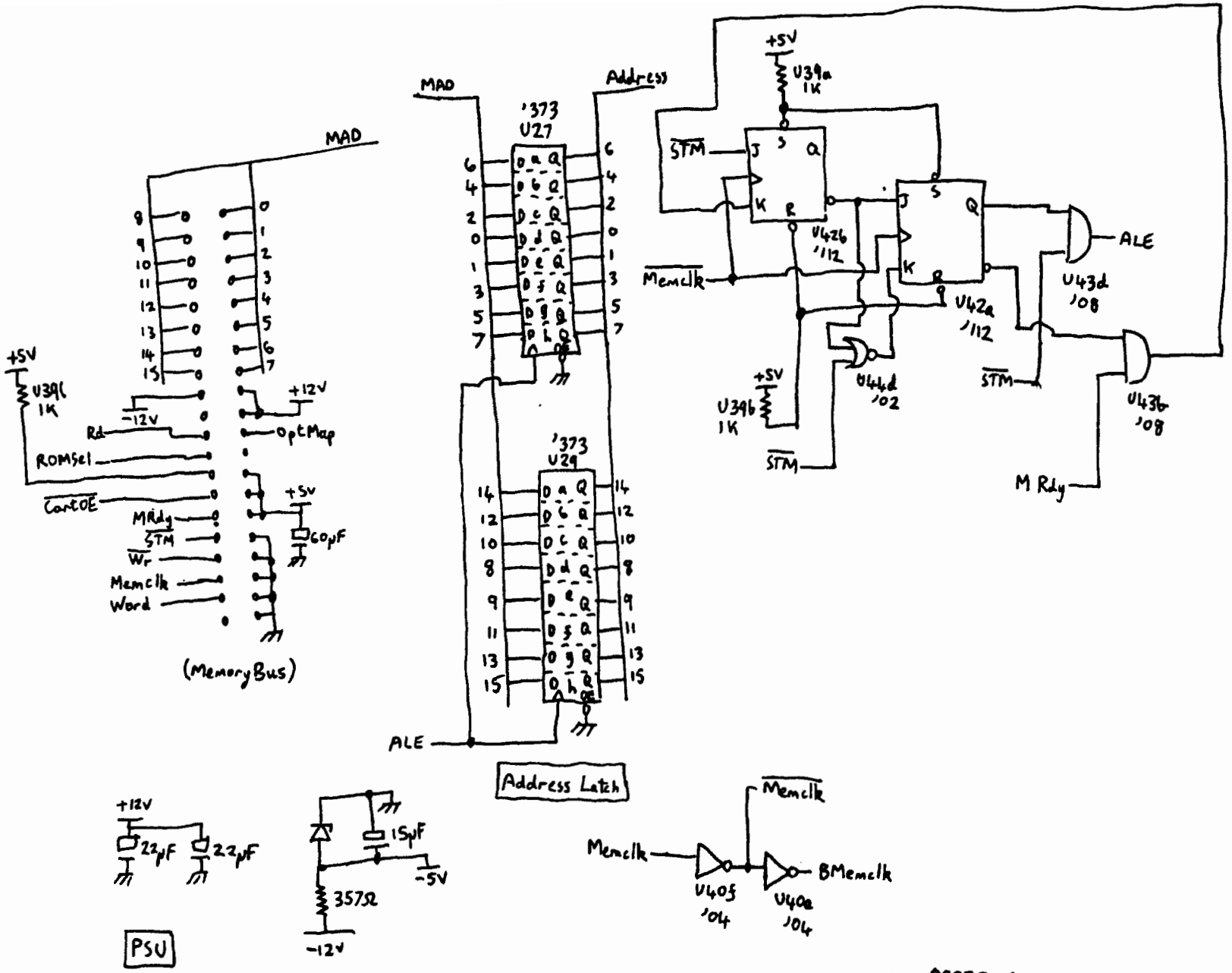


HP 9825 ROM/RAM PCB Sheet 1 09825-69524

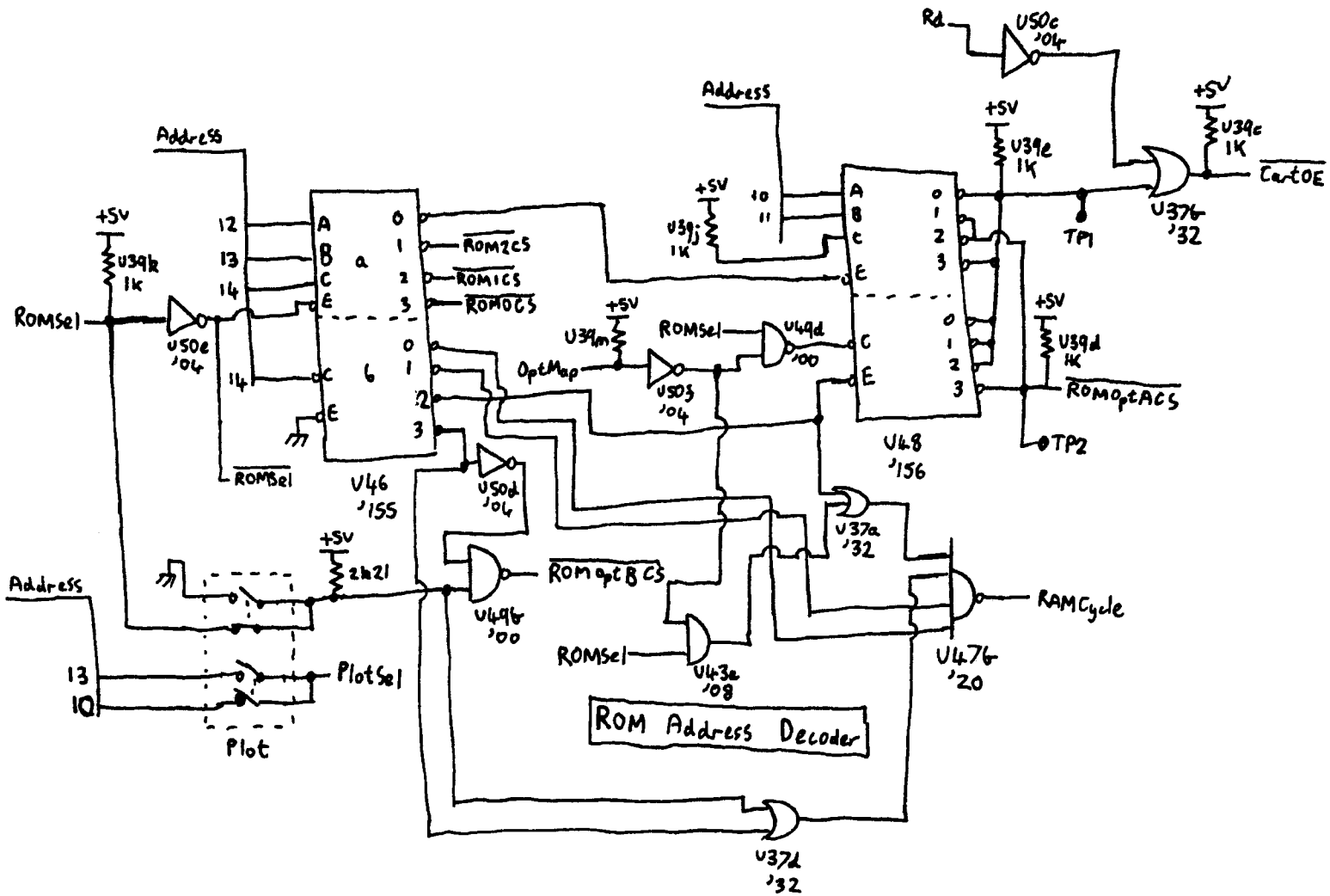


HP9825 ROM/RAM PCB Sheet 2 09825-69524

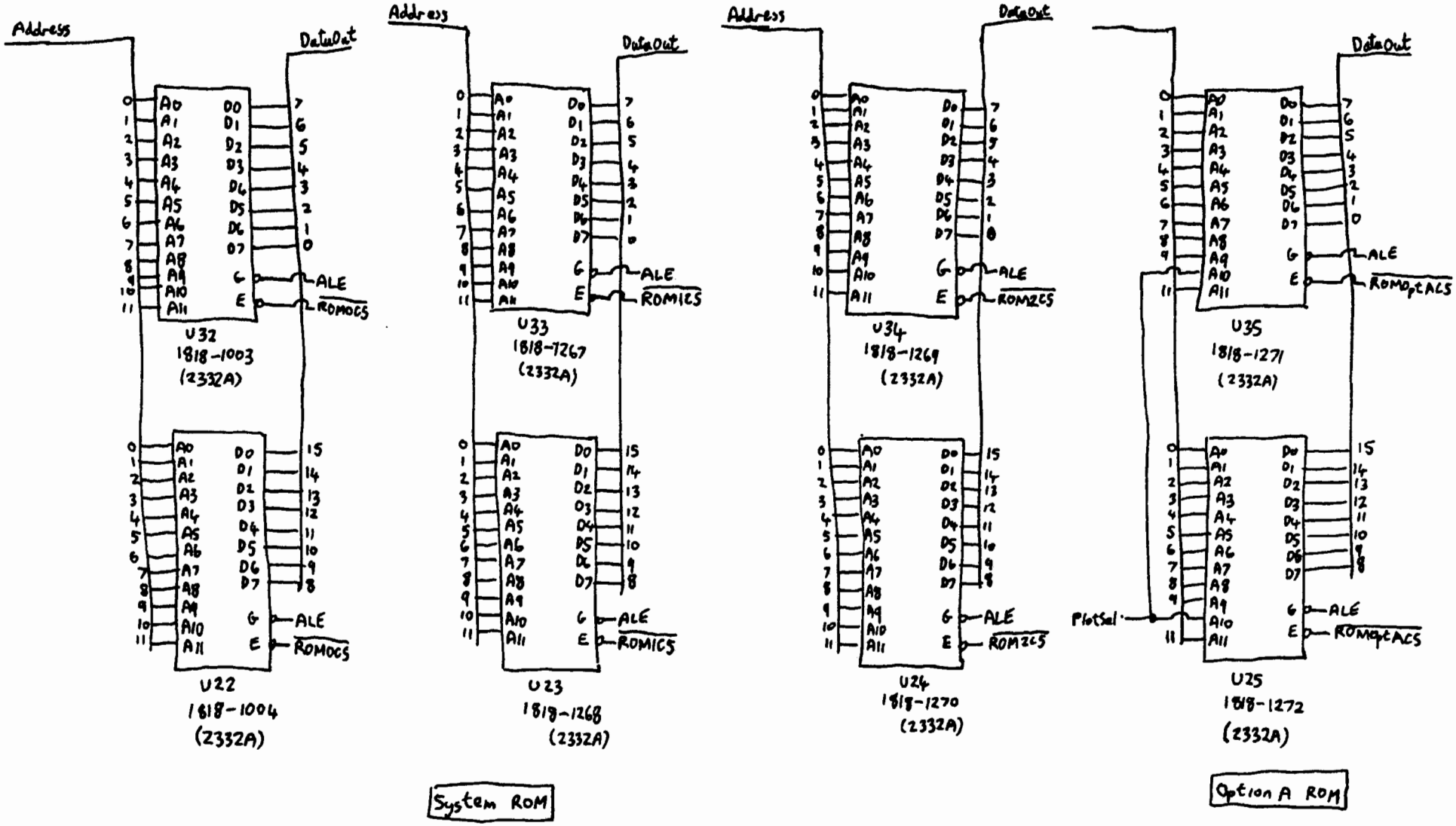


HP9825 ROM/RAM PCB Sheet 3 09825-69524

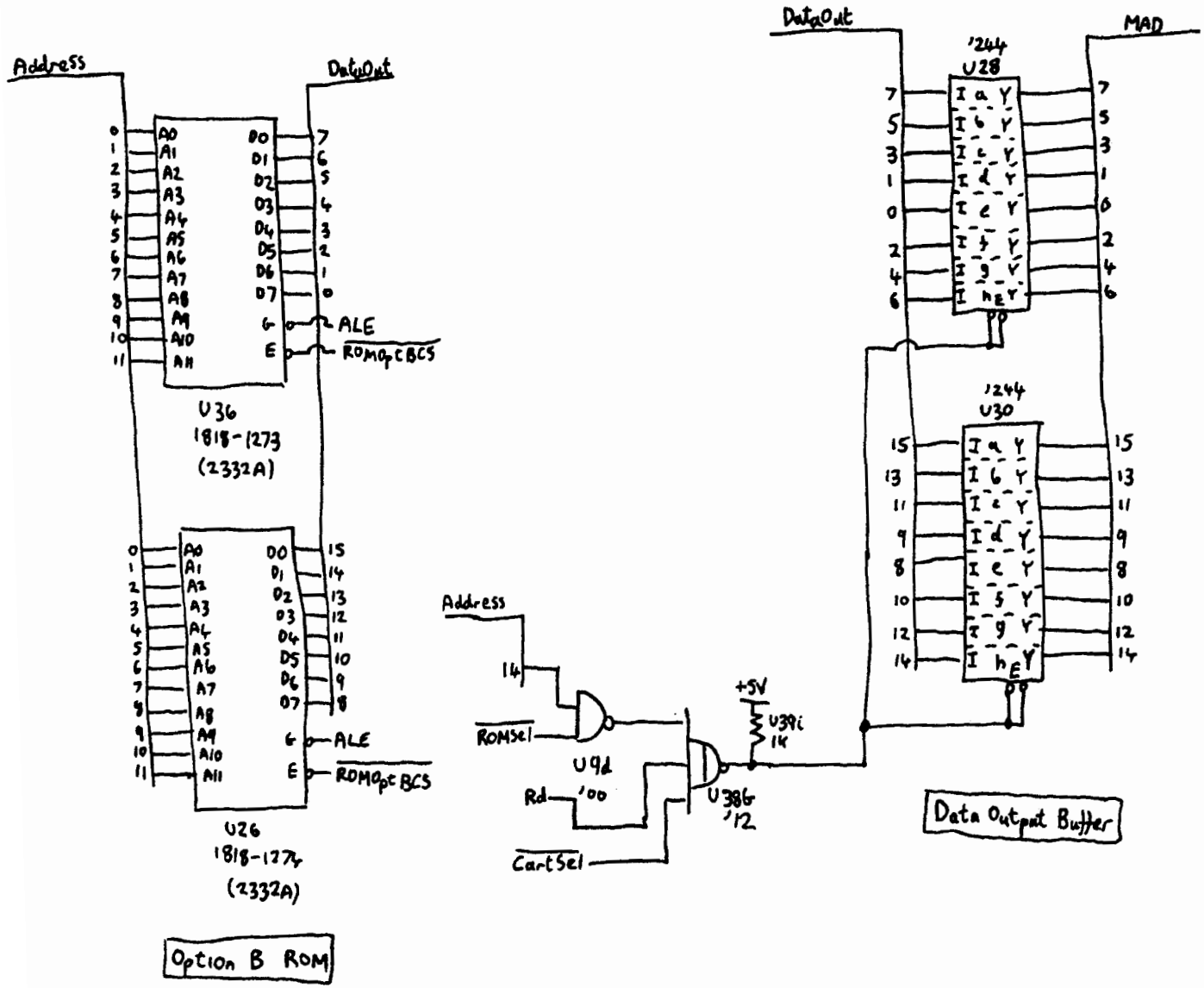


HP 9825 ROM/RAM PCB Sheet 4 09825-69524

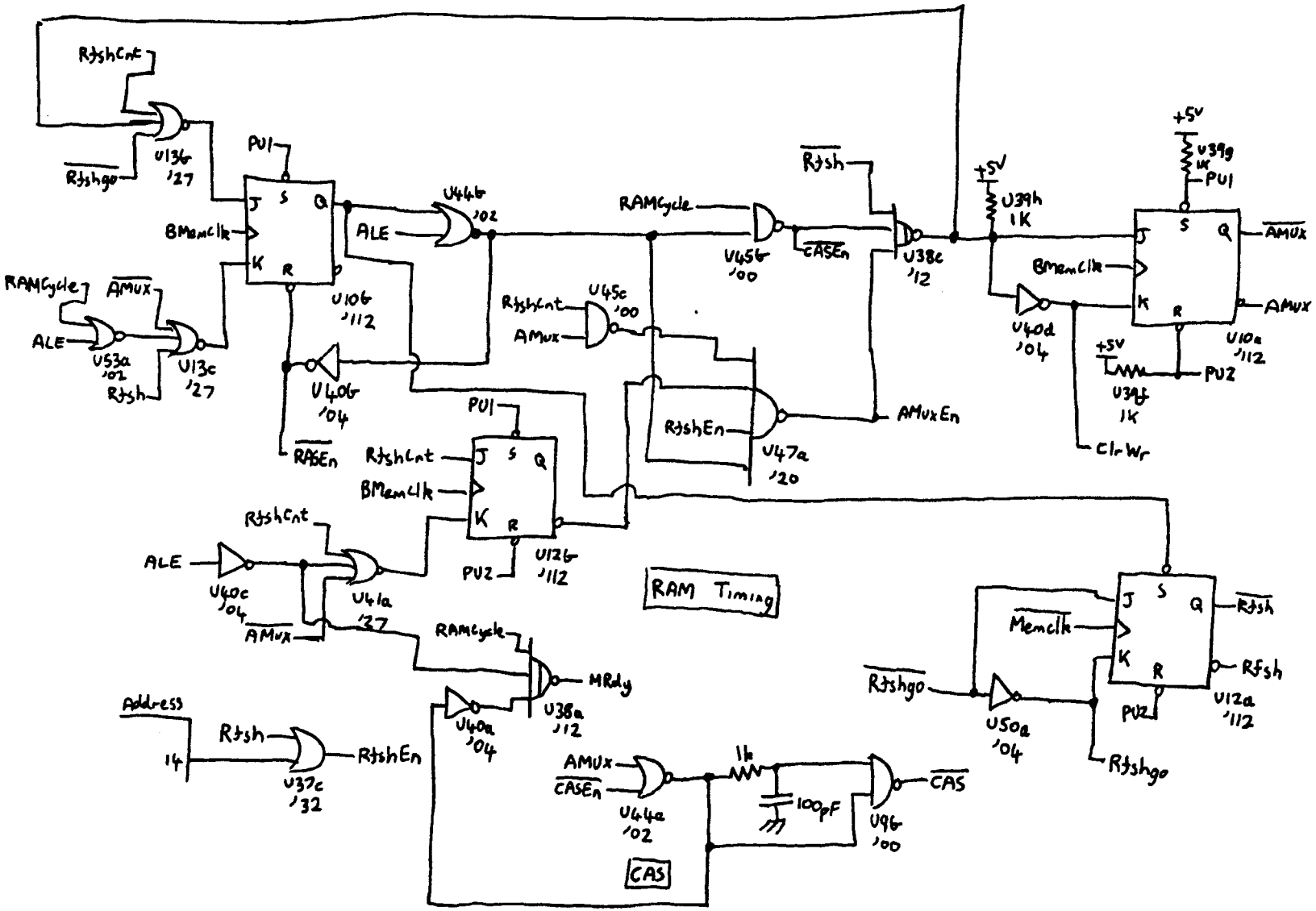


HP9825 ROM/RAM PCB Sheet 5 09825-69524

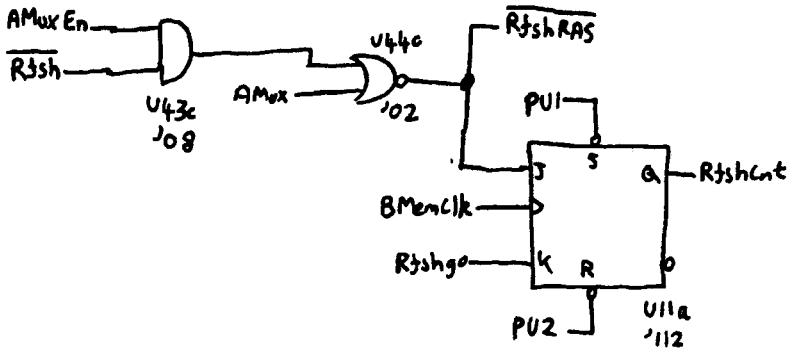


Refresh Increment

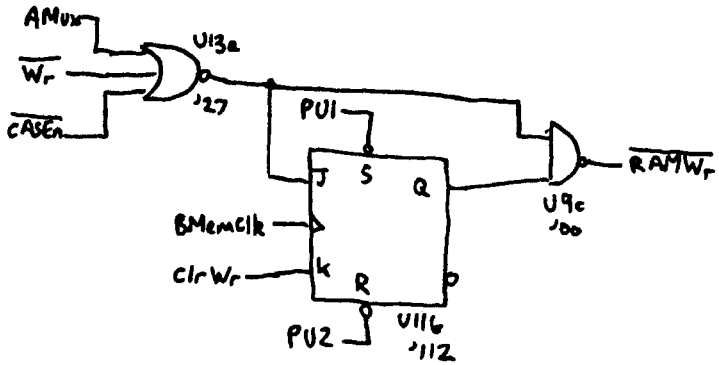


Write

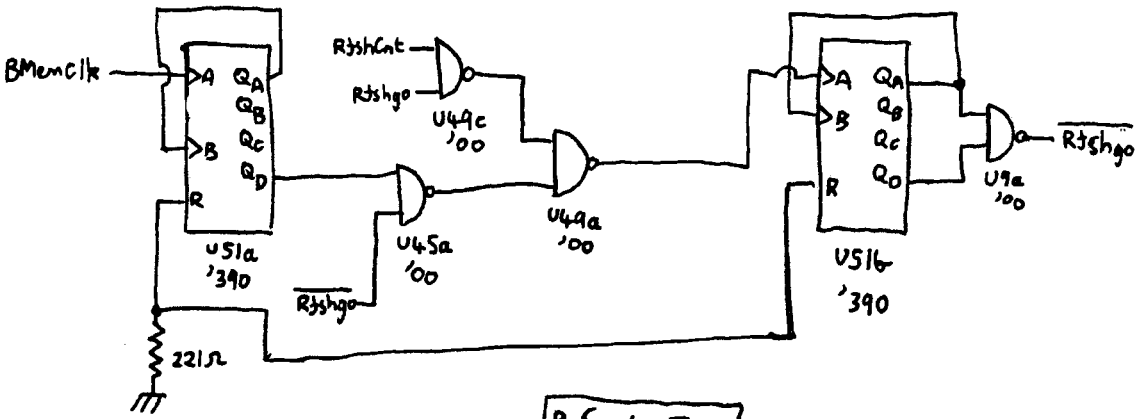


Refresh Time

HP9825 ROM/RAM PCB Sheet 6 09825-69524

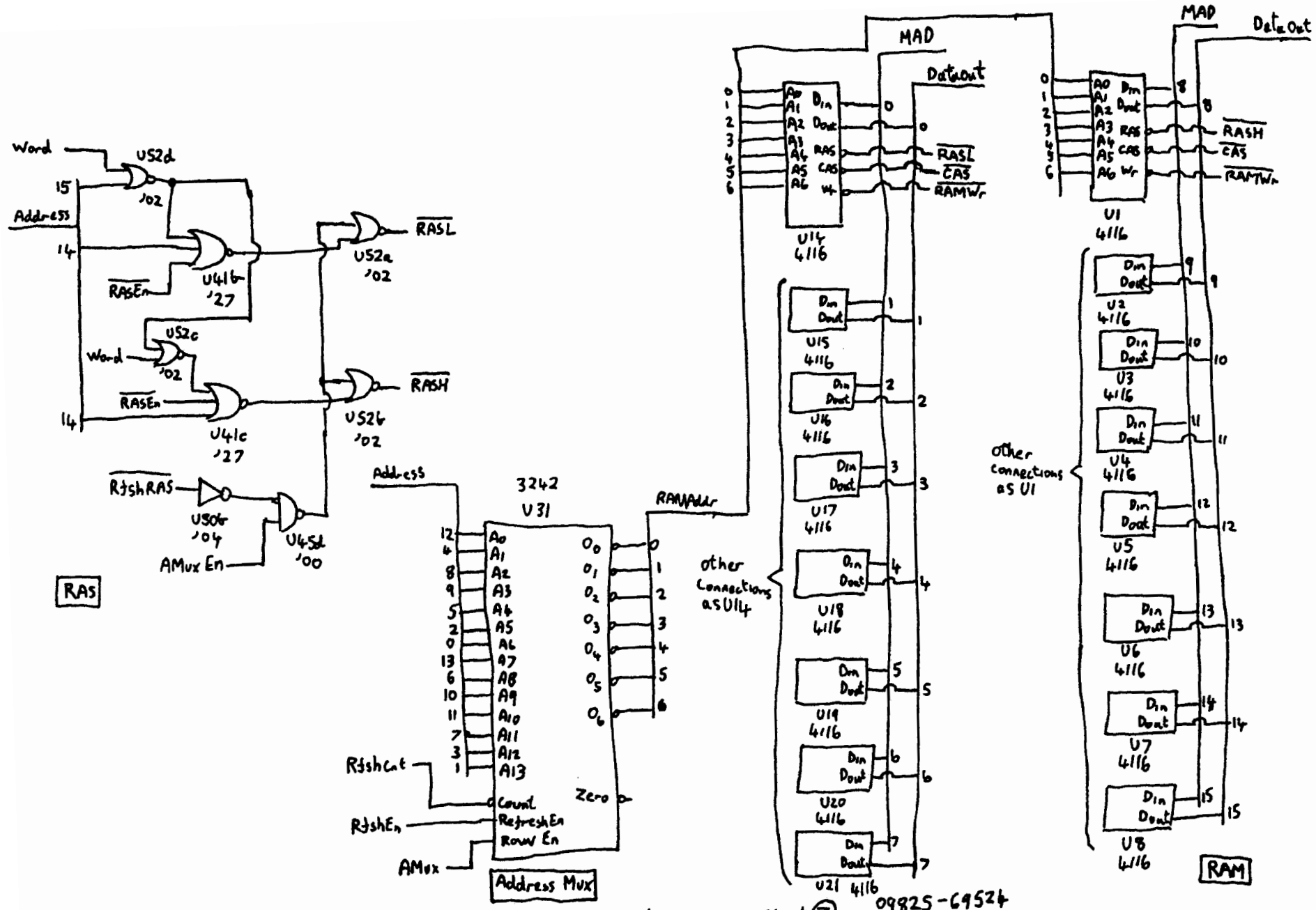
Word
U52d
'02
15
Address
14
U41b
'27
RASEn
U52a
'02
RASL
U52c
'02
Word
RASEn
14
U41c
'27
U52b
'02
RASH
RfshRAS
U50b
'04
U45d
'00
AMux En
RAS
Address
3242
U31
RAMAddr
RfshCnt
RfshEn
AMux
Count
RefreshEn
Row En
Zero
Address Mux
MAD
Data Out
U14
4116
RASL
CAS
RAMWr
other connections as U14
U15
4116
U16
4116
U17
4116
U18
4116
U19
4116
U20
4116
U21
4116
U1
4116
RASH
other connections as U1
U2
4116
U3
4116
U4
4116
U5
4116
U6
4116
U7
4116
U8
4116
RAM
09825-69524
HP9825 ROM/RAM PCB Sheet 7

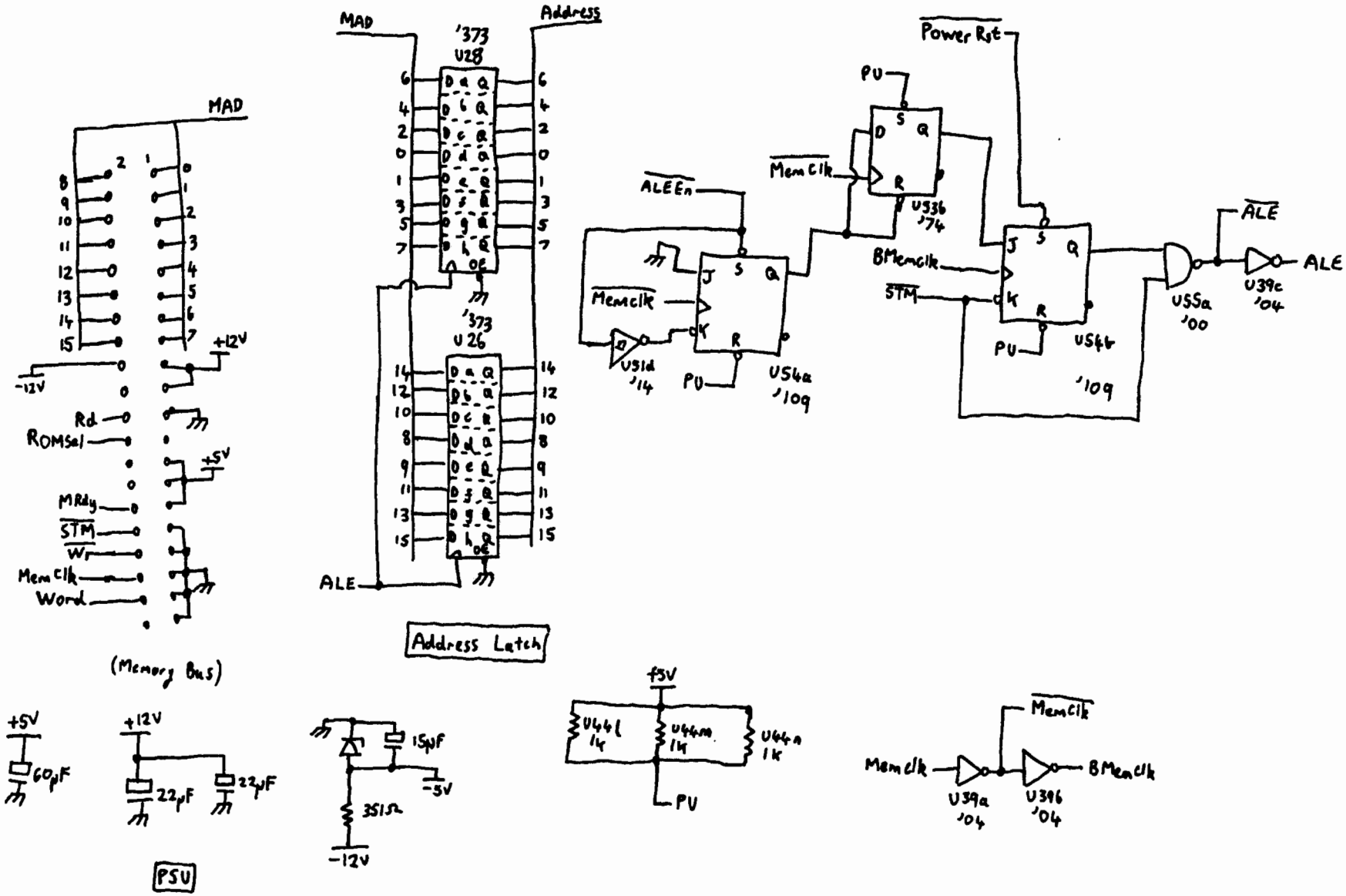


HP9825 32K RAM PCB Sheet 1 09825-66525

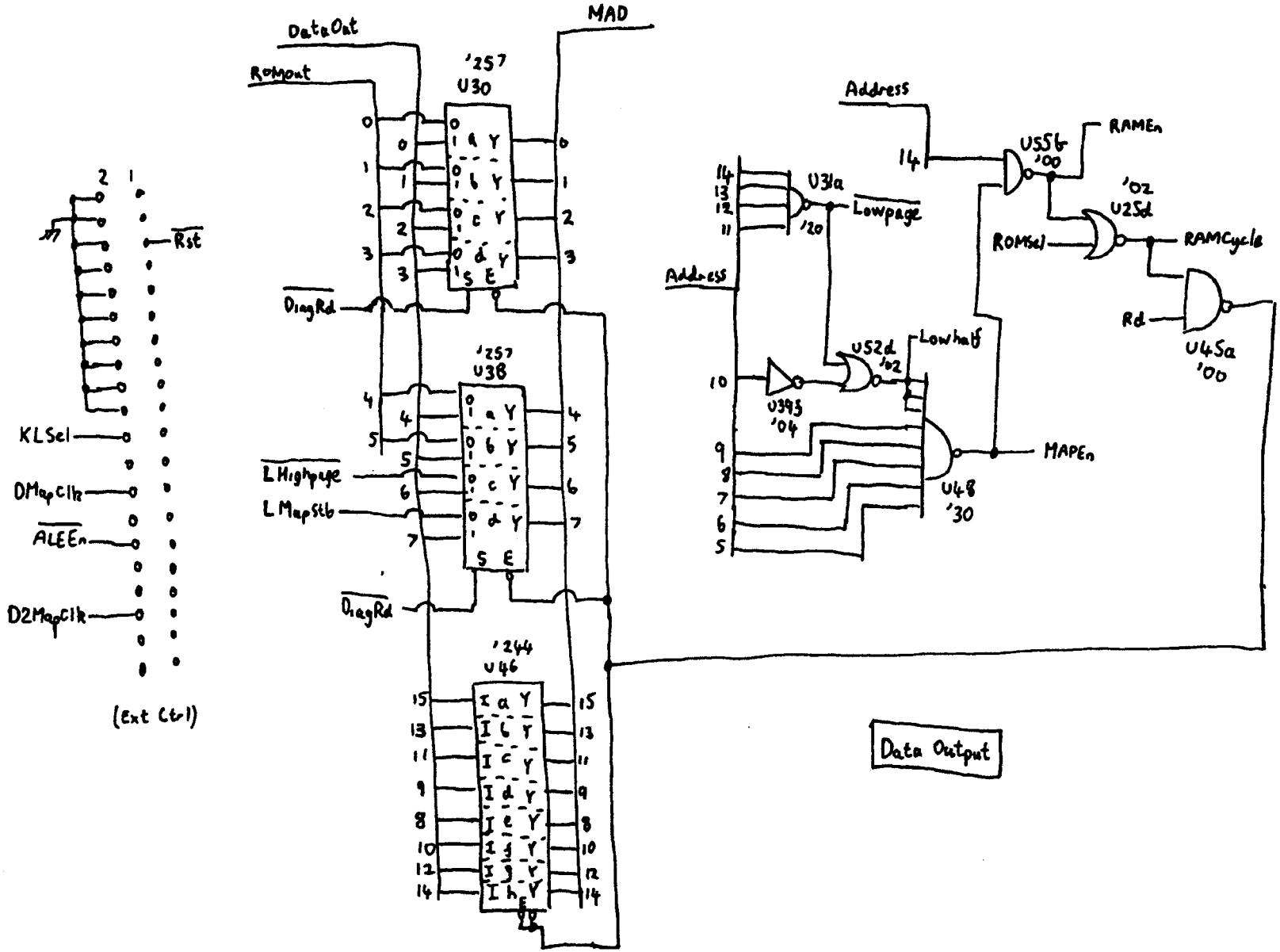


HP9825 32k RAM PCB Sheet 2 09825-66525

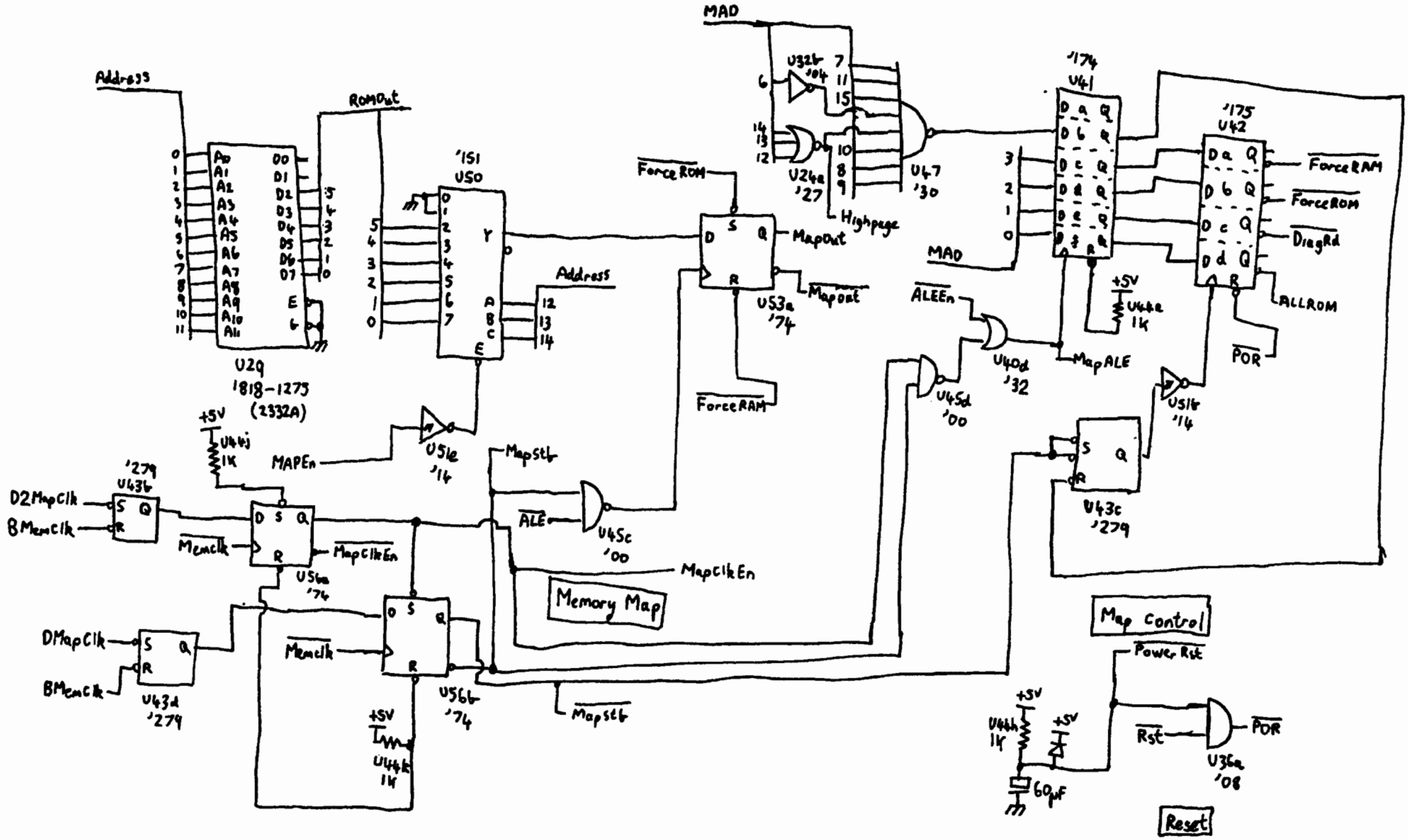


HP9825 32K RAM PCB Sheet 3 09825-66525

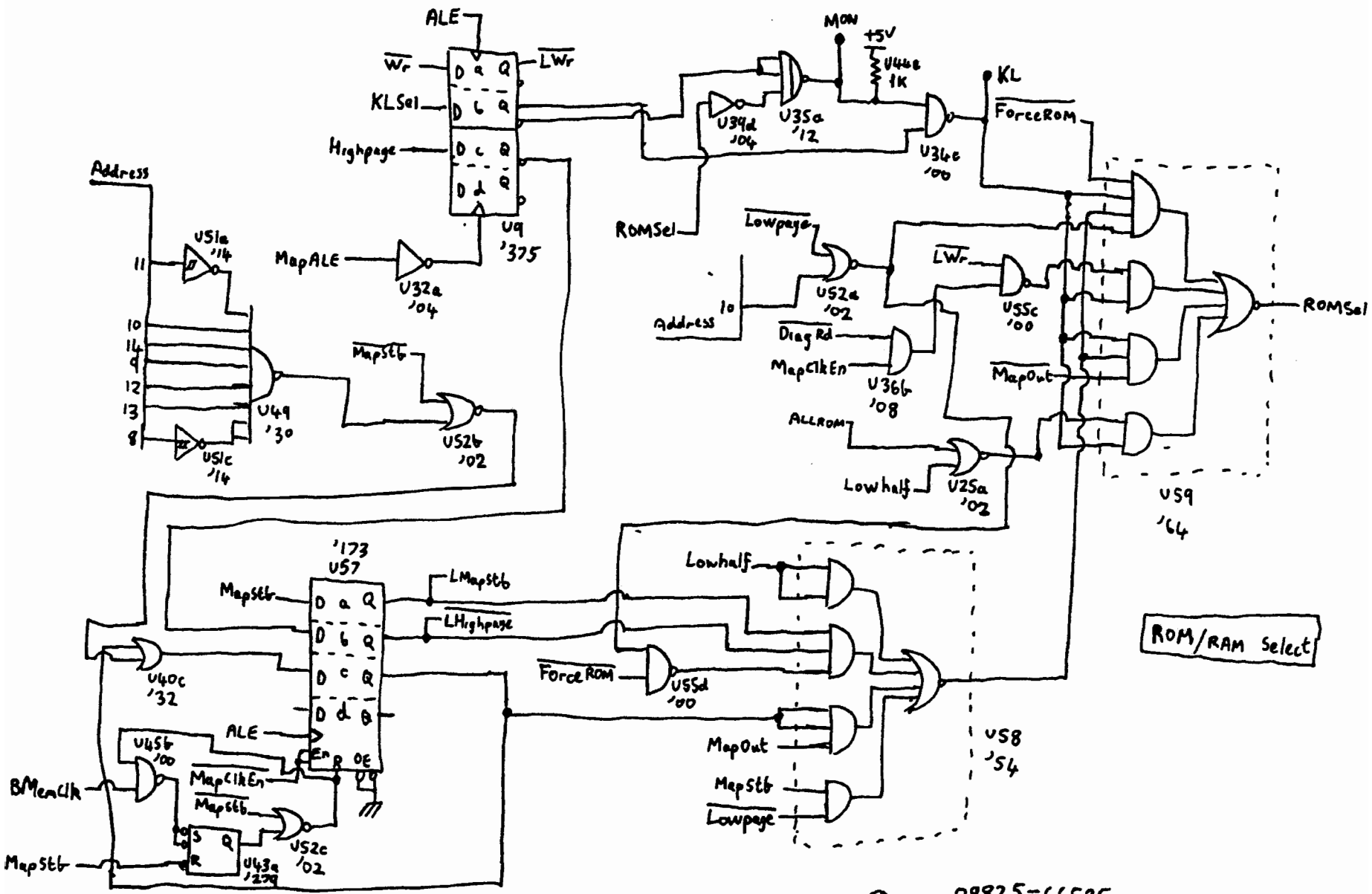


HP 9825 32K RAM PCB Sheet 4 09825-66525

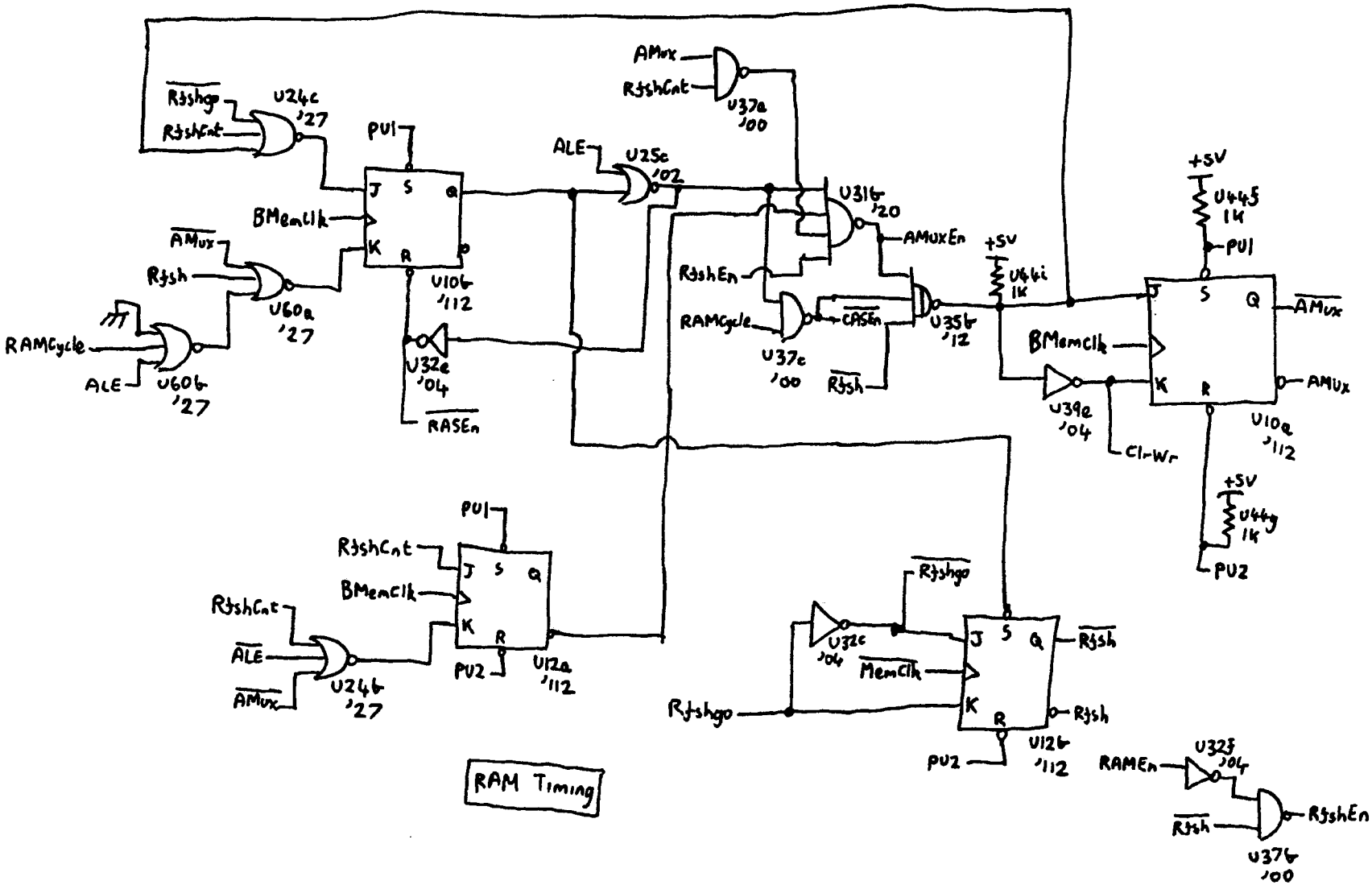


HP9825 32K RAM PCB Sheet 5 09825-66525

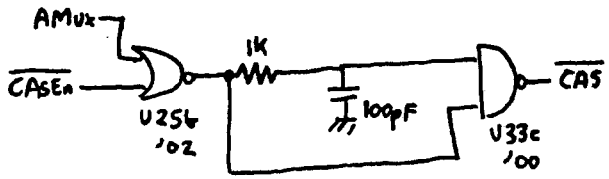


CAS

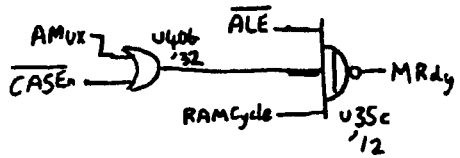


Ready

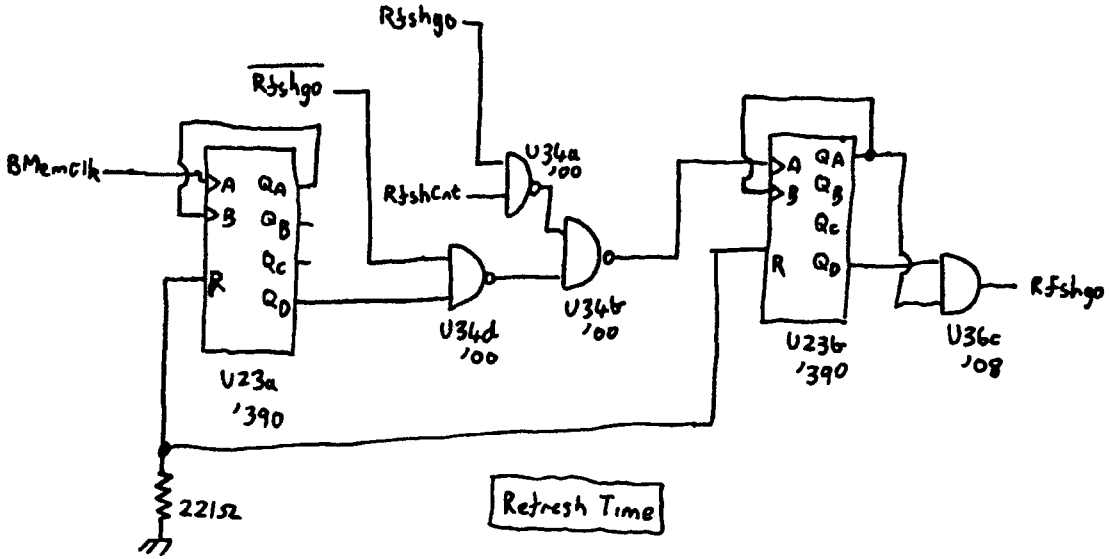


Refresh Time

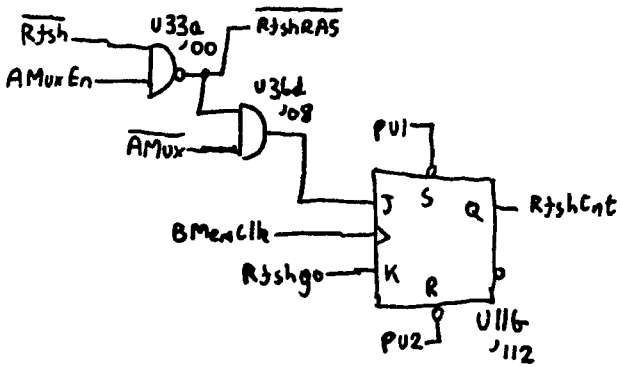


Refresh Increment

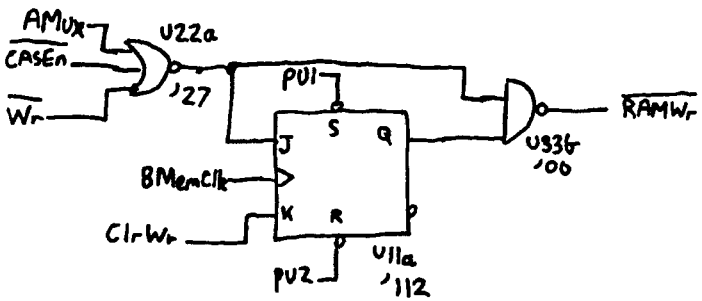


RAM Write

HP9825 32K RAM PCB Sheet 6 09825-66525

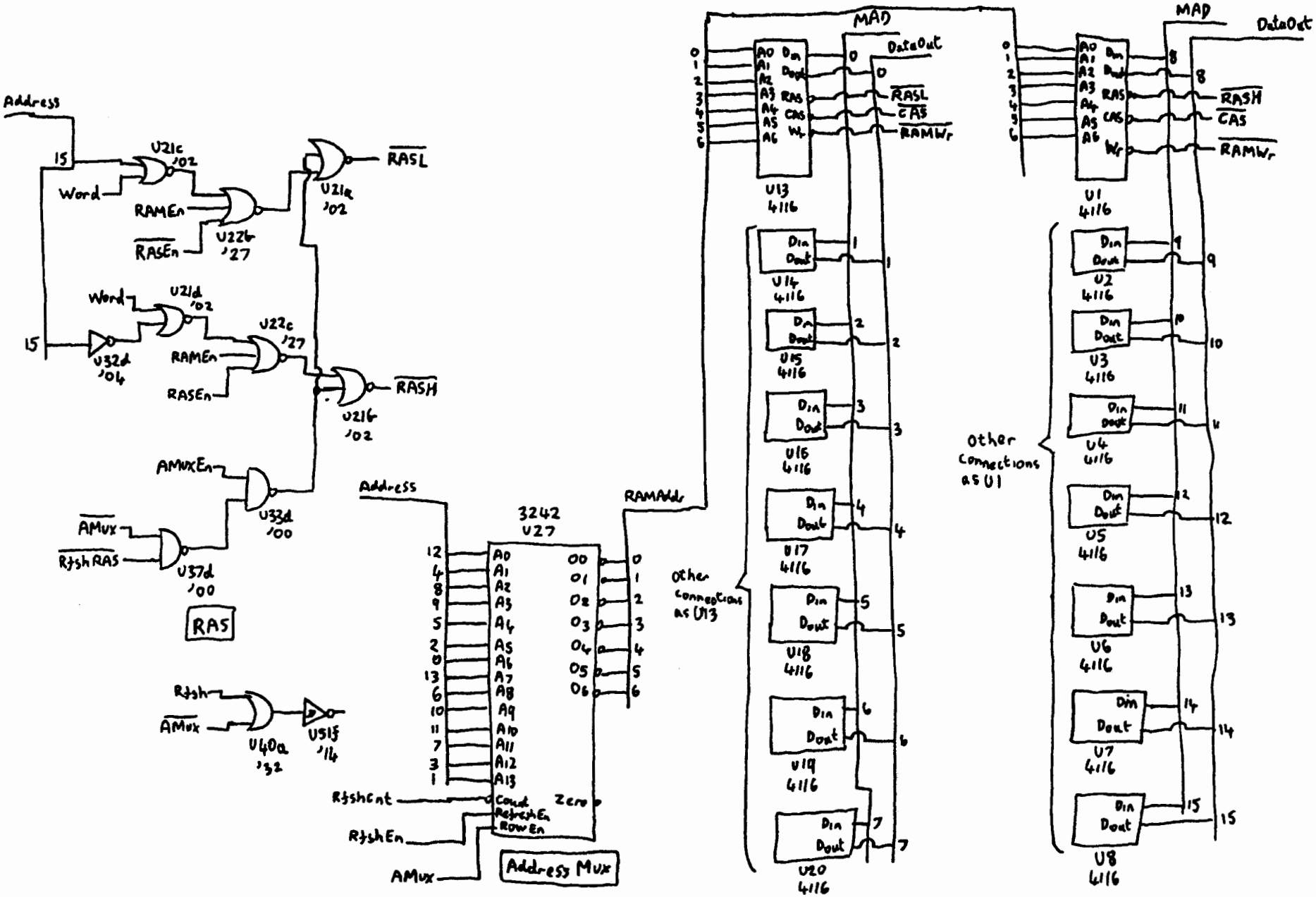


HP 9825 32k RAM PCB Sheet 7 09825-66525

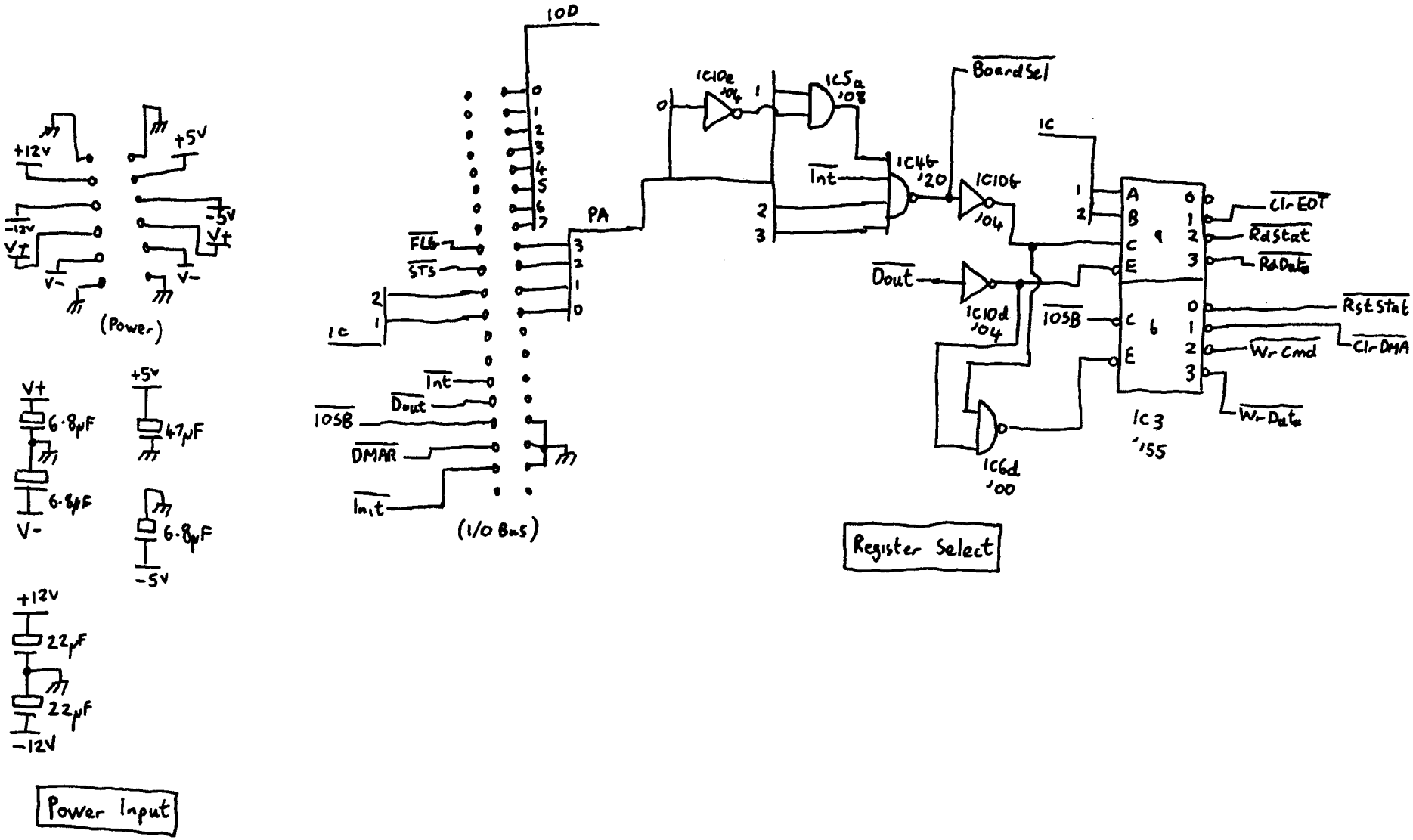


HP9825 Tape Controller Sheet ① 09825-66561

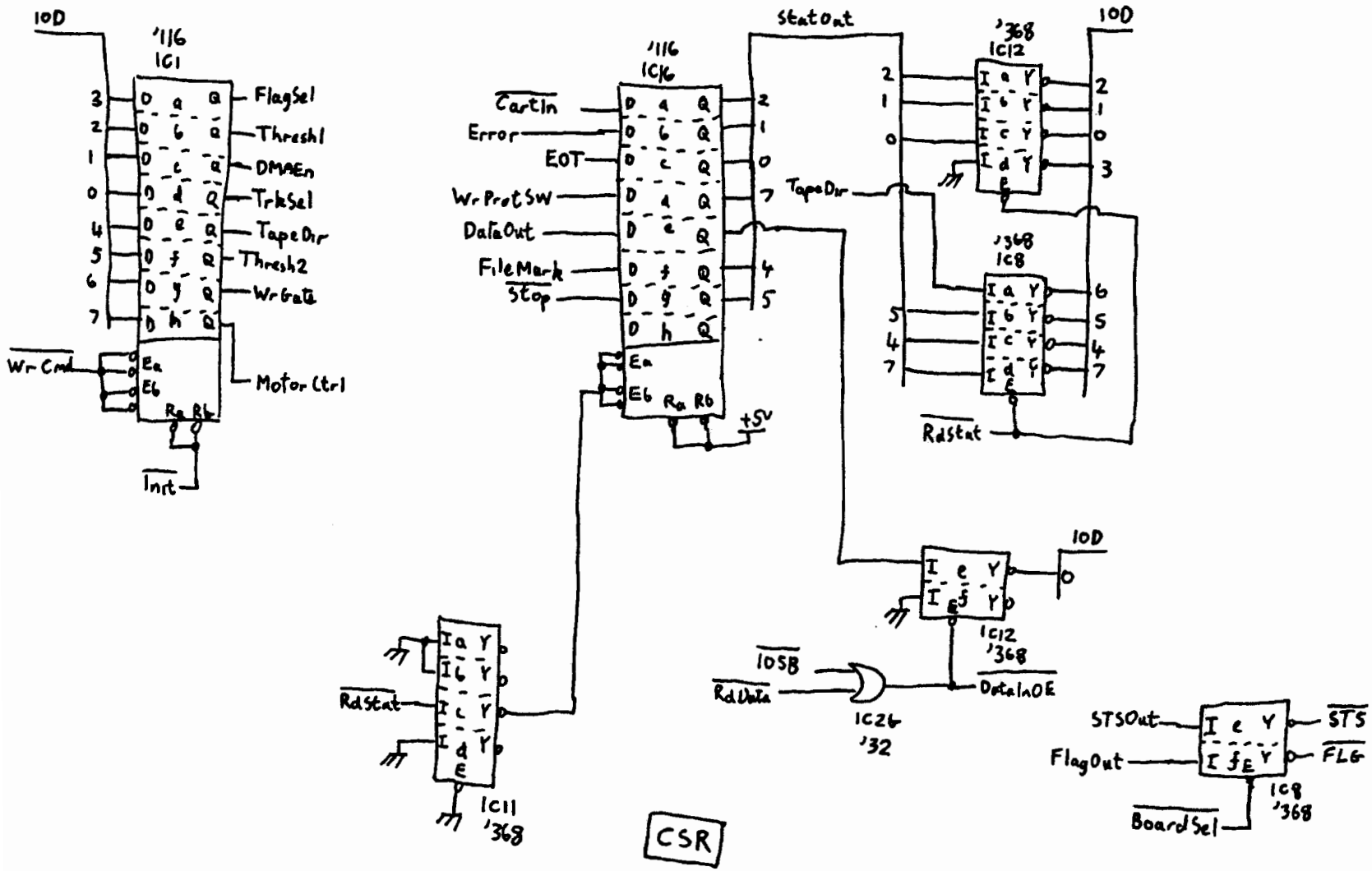


09825-66561

HP9825 Tape Controller Sheet 2

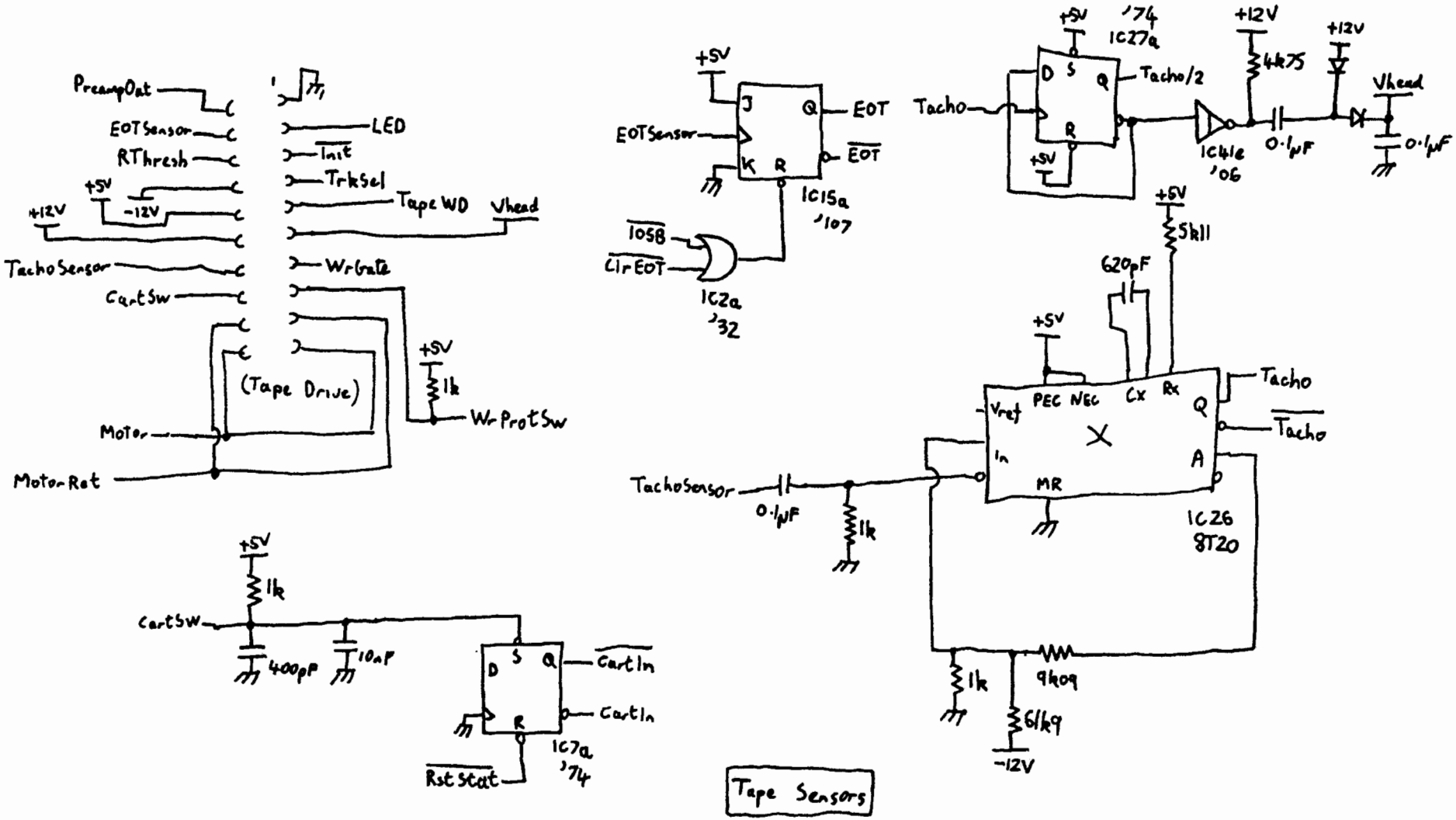


HP9825 Tape Controller Sheet ③ 09825-66561

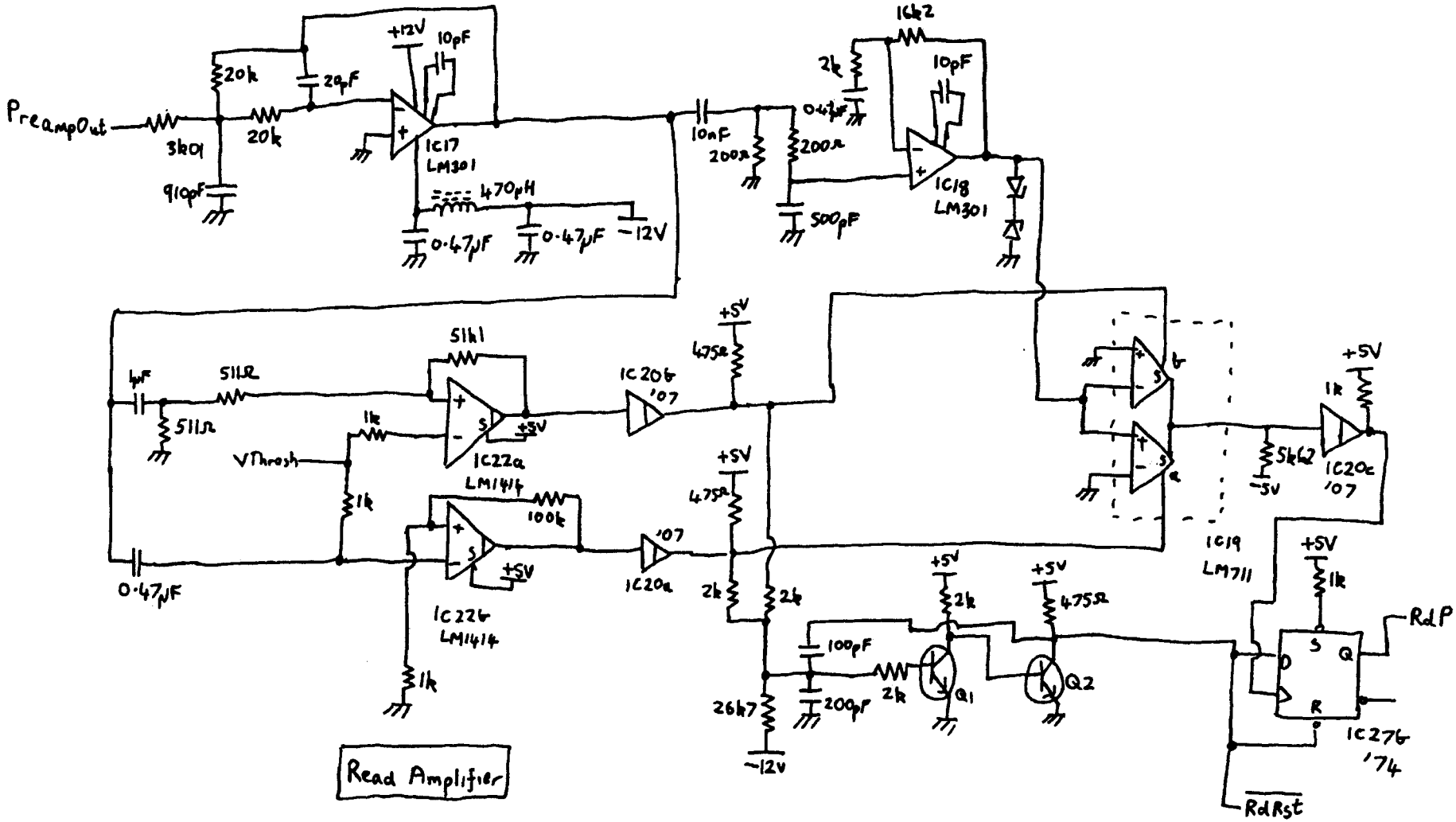


HP9825 Tape Controller Sheet (4) 09825-66561

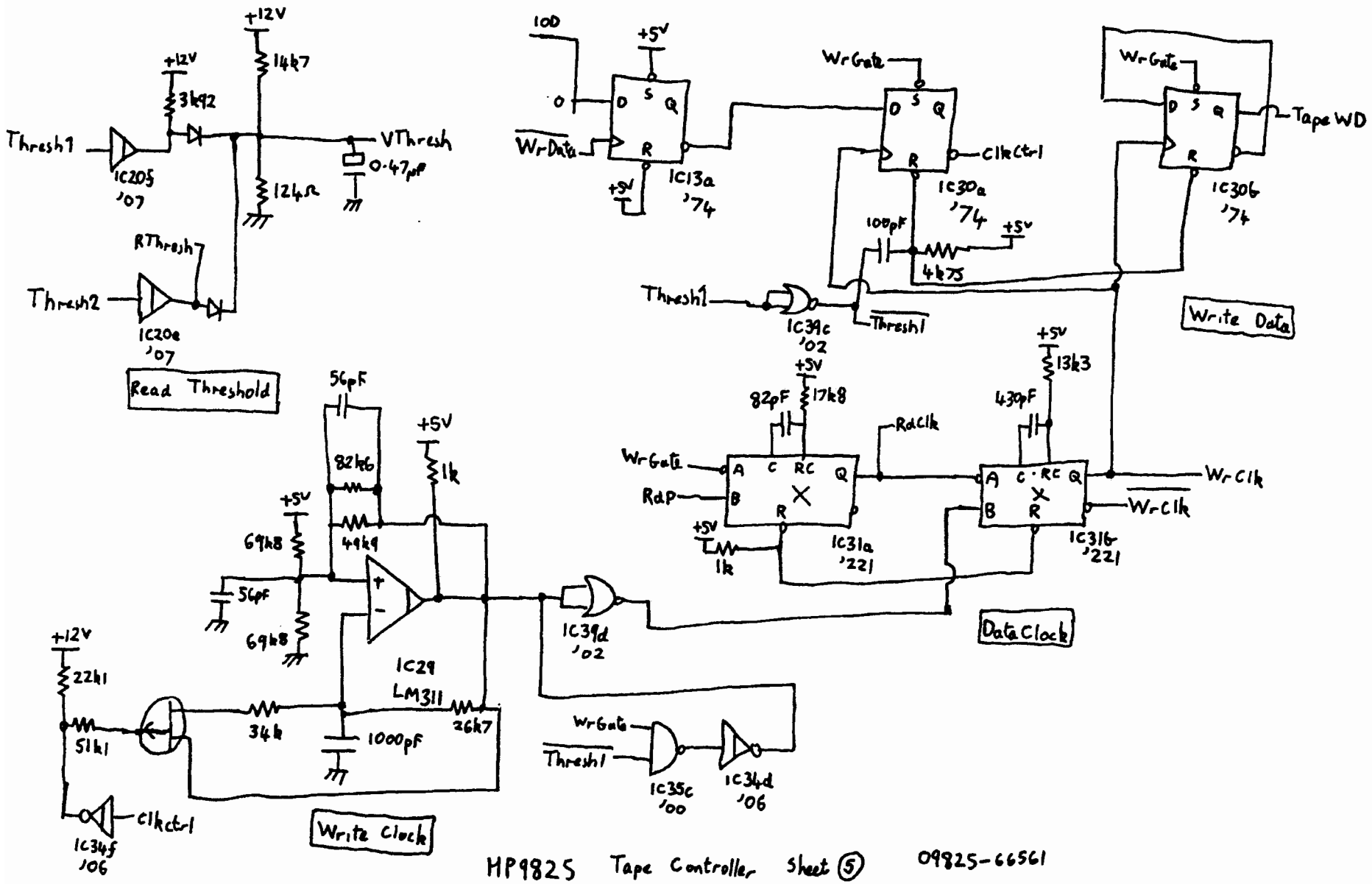


HP9825 Tape Controller Sheet 5 09825-66561

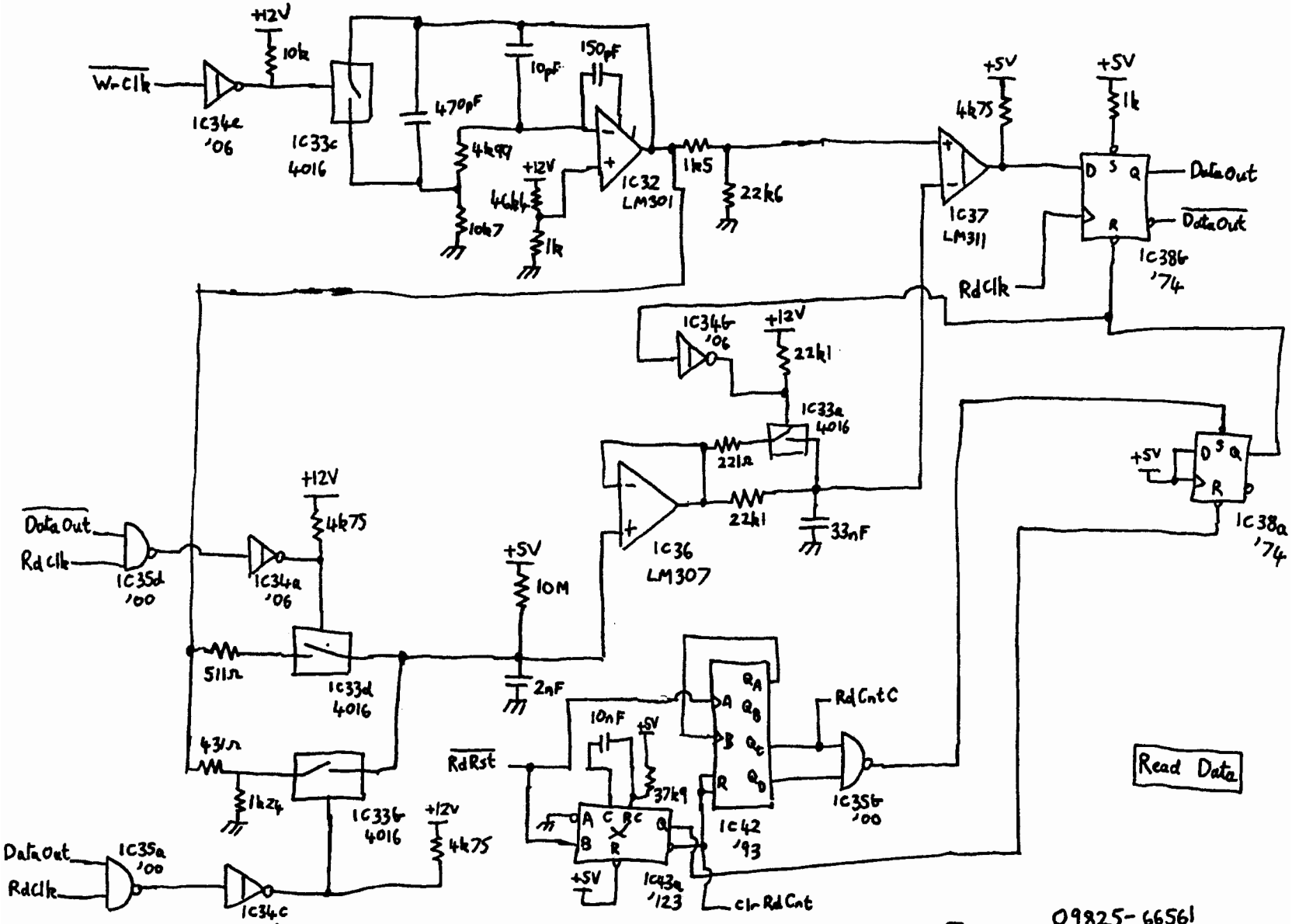
Wr Clk
+12V
10k
1C34e
'06
1C33c
4016
470pF
10pF
150pF
4k99
10k7
+12V
4k64
1k
1C32
LM301
1k5
22k6
+5V
4k75
1C37
LM311
+5V
1k
D S Q
R
Data Out
Data Out
1C38b
'74
Rd Clk
1C34b
'06
+12V
22k1
1C33a
4016
221Ω
22k1
33nF
1C36
LM307
+5V
D S Q
R
1C38a
'74
Data Out
Rd Clk
1C35d
'00
1C34a
'06
+12V
4k75
+5V
10M
2nF
511Ω
1C33d
4016
431Ω
1k24
1C33b
4016
+12V
4k75
Data Out
Rd Clk
1C35a
'00
1C34c
'06
Rd Rst
10nF
+5V
37k9
A C BC Q
B R
+5V
1C43a
'123
clr Rd Cnt
QA
A QB
B QC
R QD
1C42
'93
Rd Cnt C
1C35b
'00
Read Data
HP9825 Tape Controller Sheet 6
09825-66561

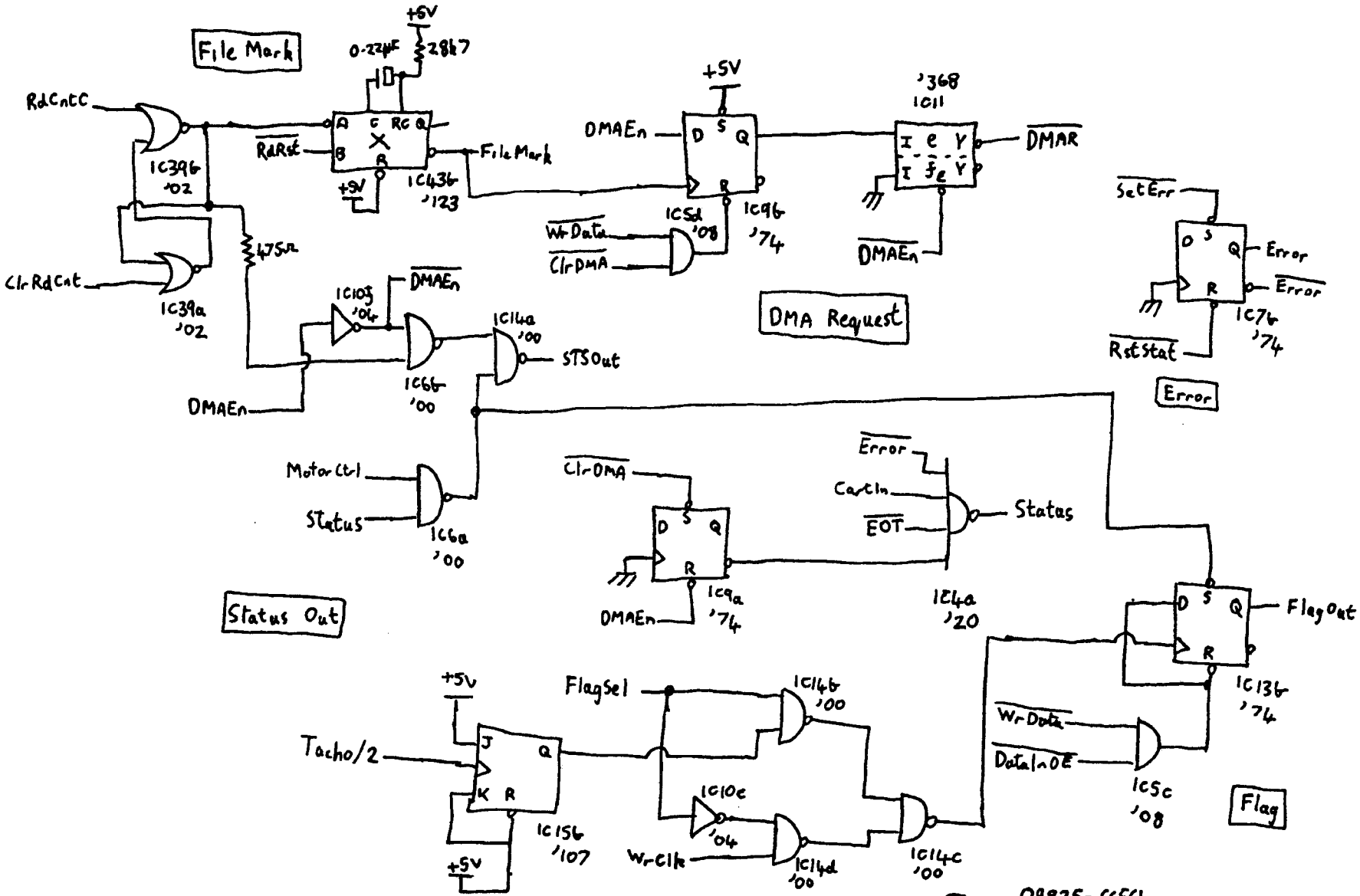


HP9825 Tape Controller Sheet 7

09825-66561

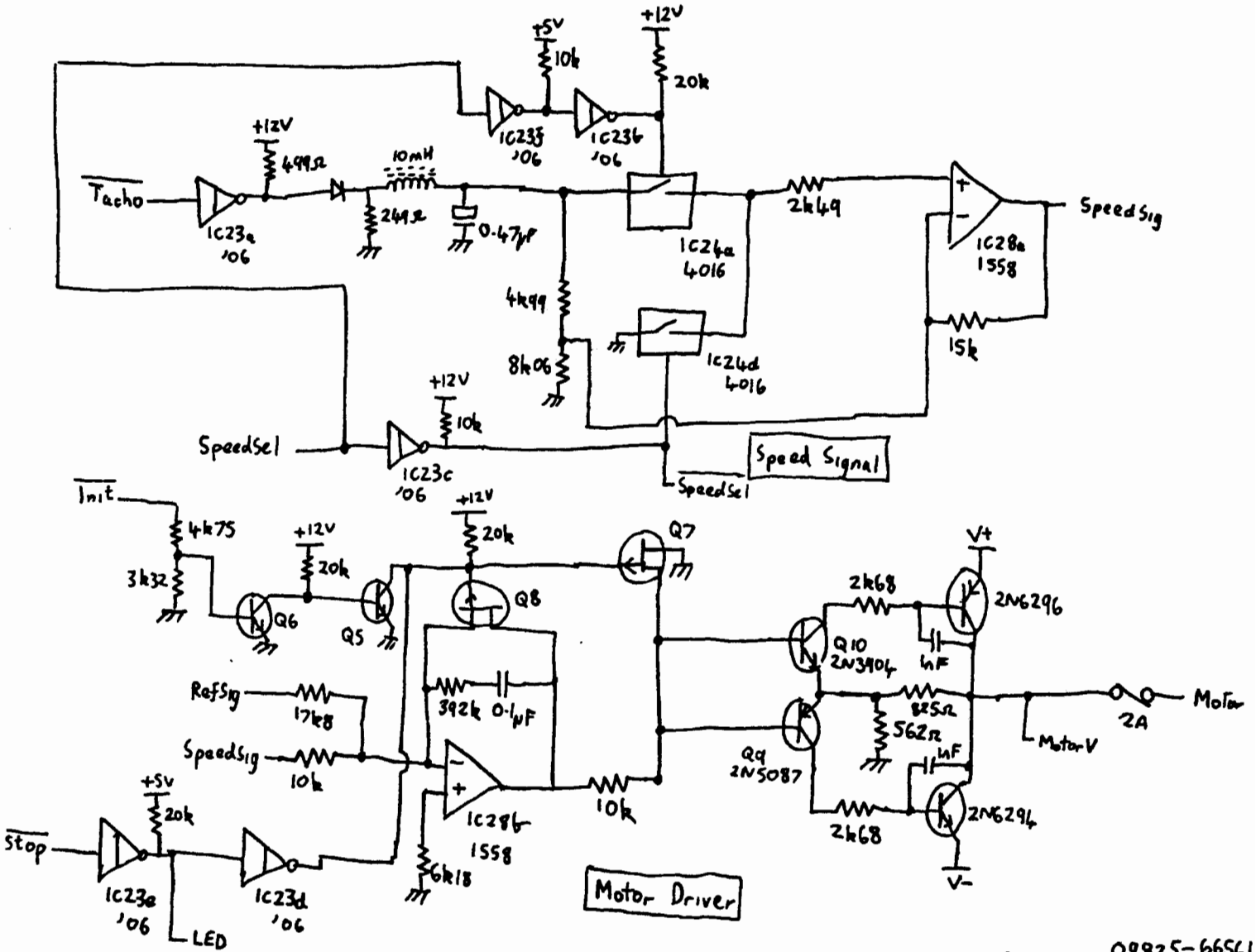


HP 9825 Tape Controller Sheet 8

09825-66561

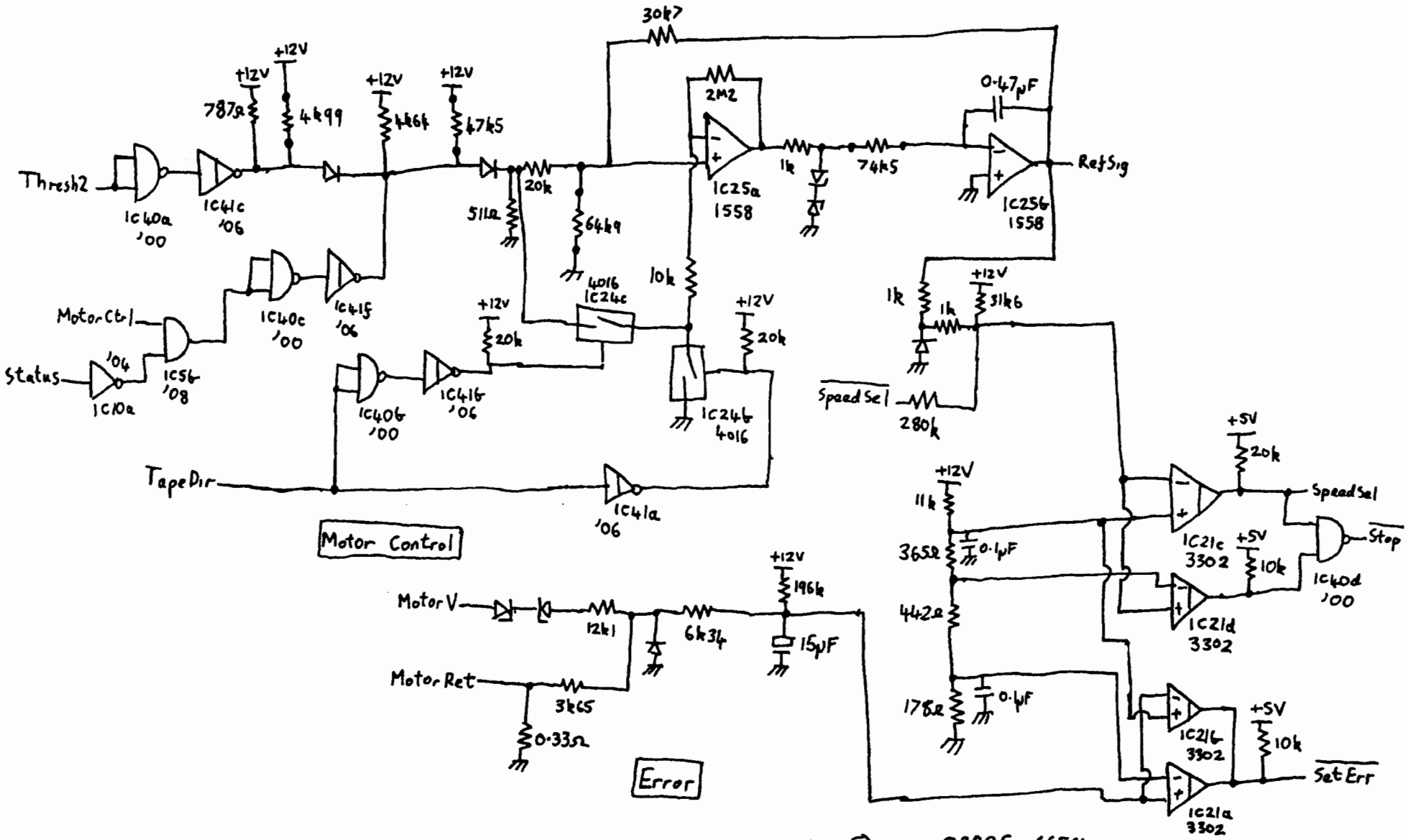


HP 9825 Tape Controller Sheet 9 09825-66561

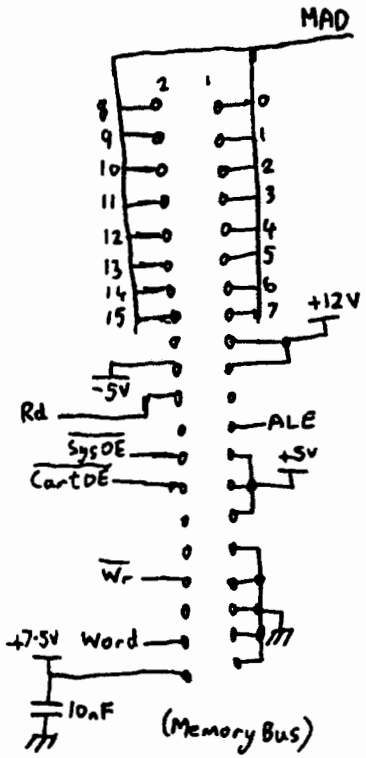


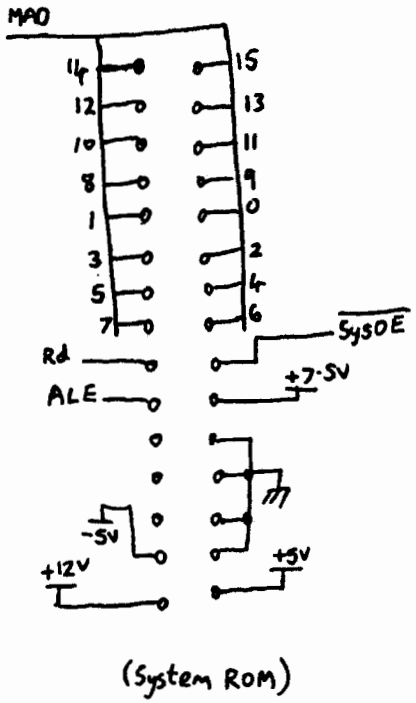


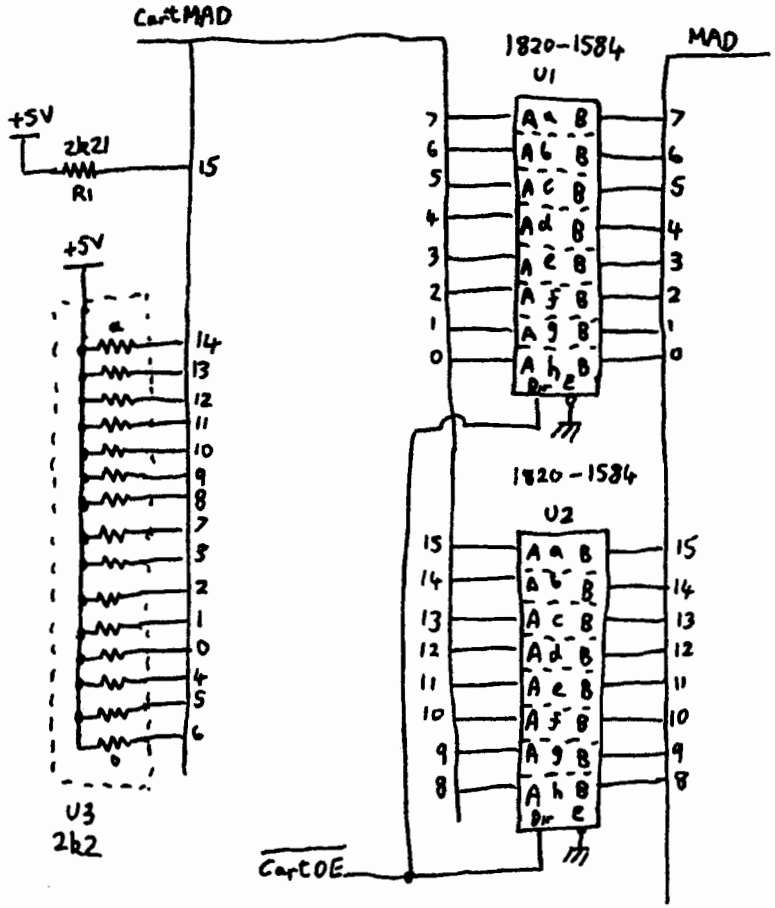


Bus Buffer

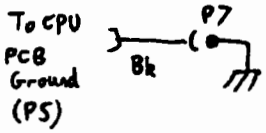


HP9825 ROM Backplane Sheet ① 09825-66512

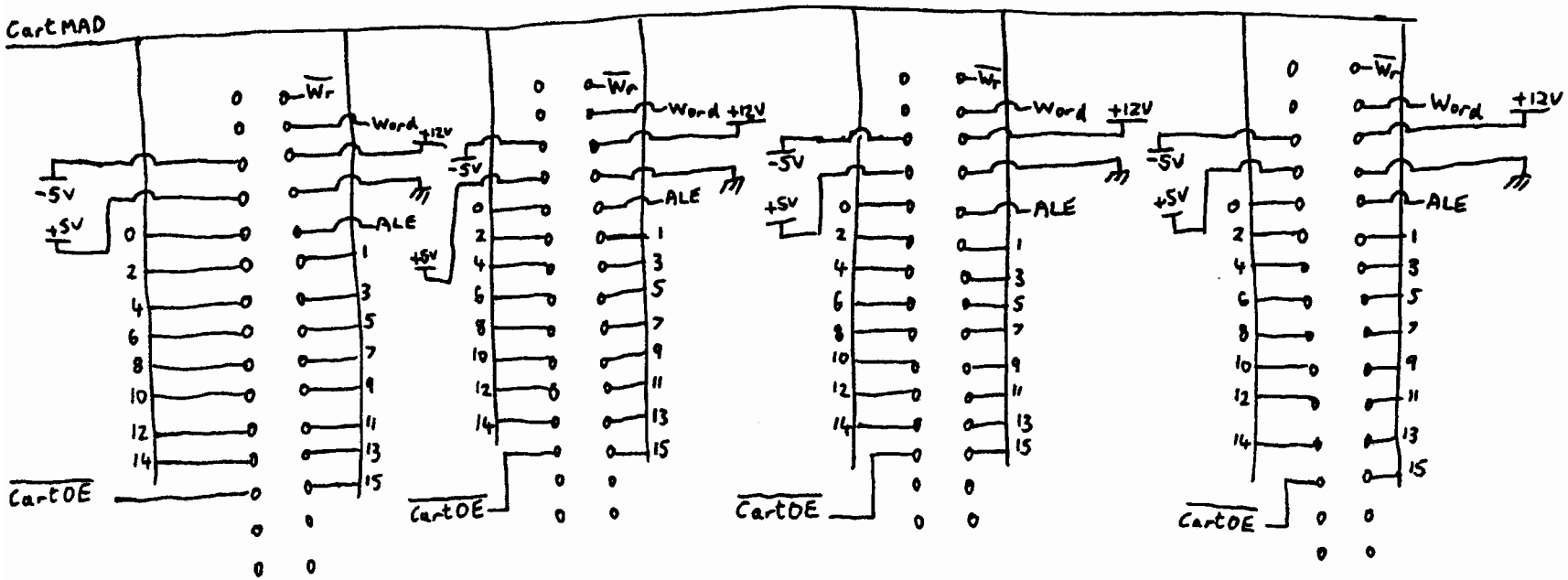


Cartridge Slots

HP 9825 ROM Backplane Sheet 2 09825-66512

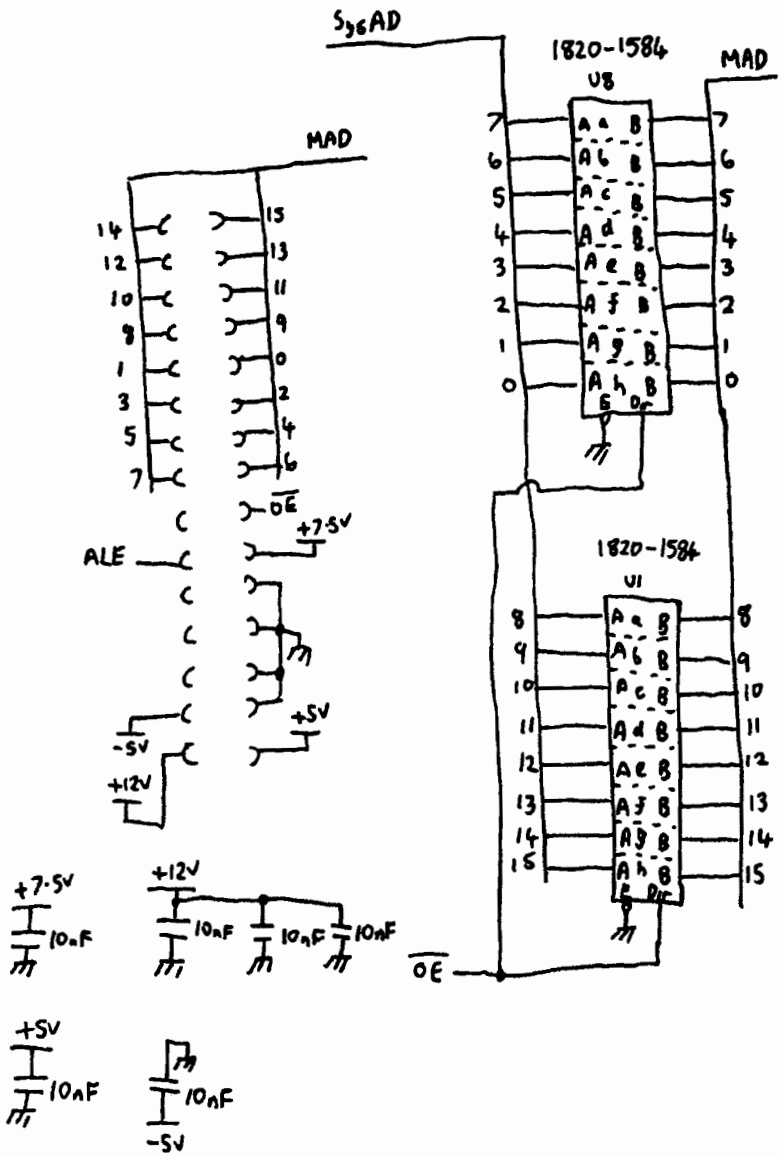


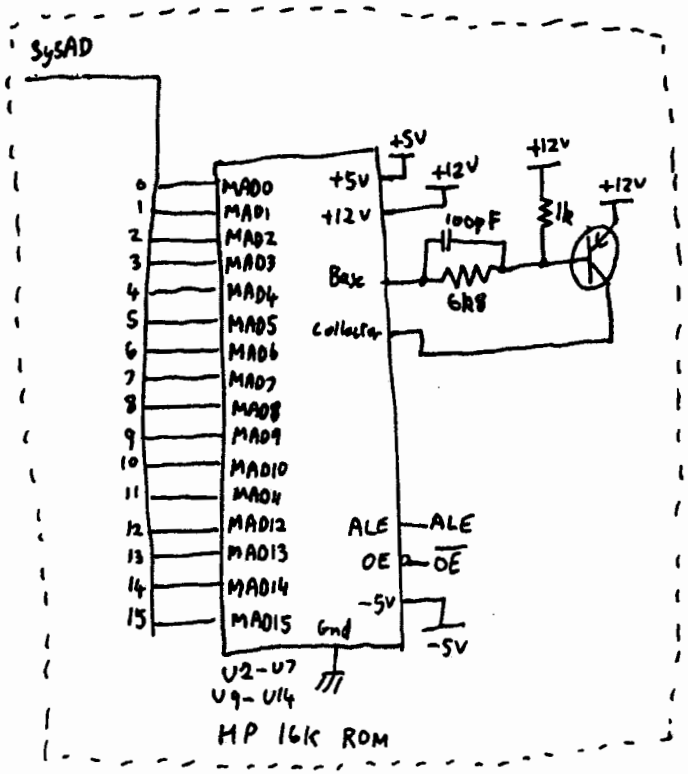


Typical of 12

| HP9831 BASIC | |
|---|---|
| U2 | 1818-2661 |
| U3 | 1818-2660 |
| U4 | 1818-2659 |
| U5 | 1818-2658 |
| U6 | 1818-2657 |
| U7 | 1818-2656 |
| U9 | 1818-2650 |
| U10 | 1818-2651 |
| U11 | 1818-2652 |
| U12 | 1818-2653 |
| U13 | 1818-2654 |
| U14 | 1818-2655 |

(09825-66513)
(09831-66513)

HP9831 System ROM Cartridge (also HP9825)

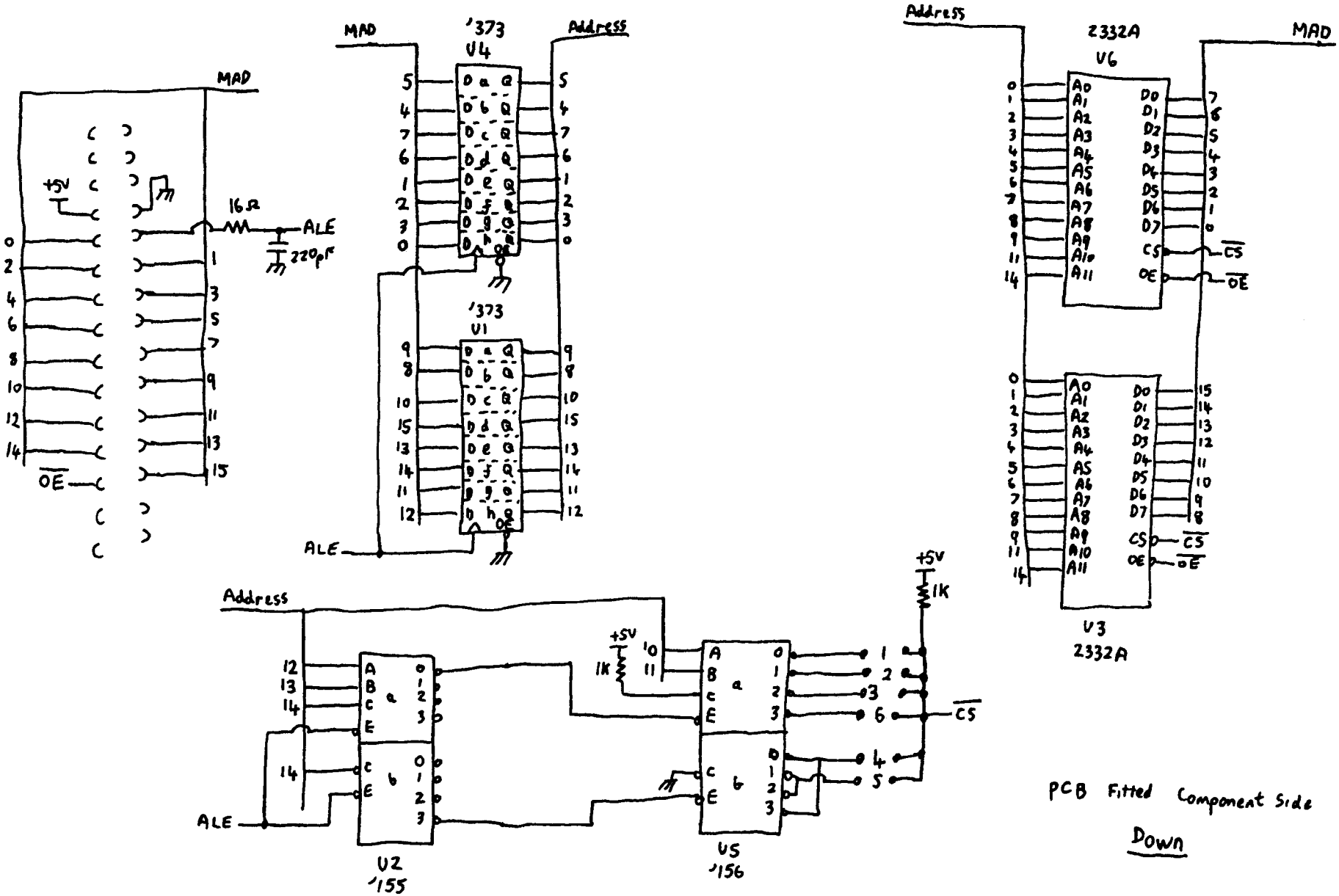


HP 9825 ROM Cartridge (Type 1)

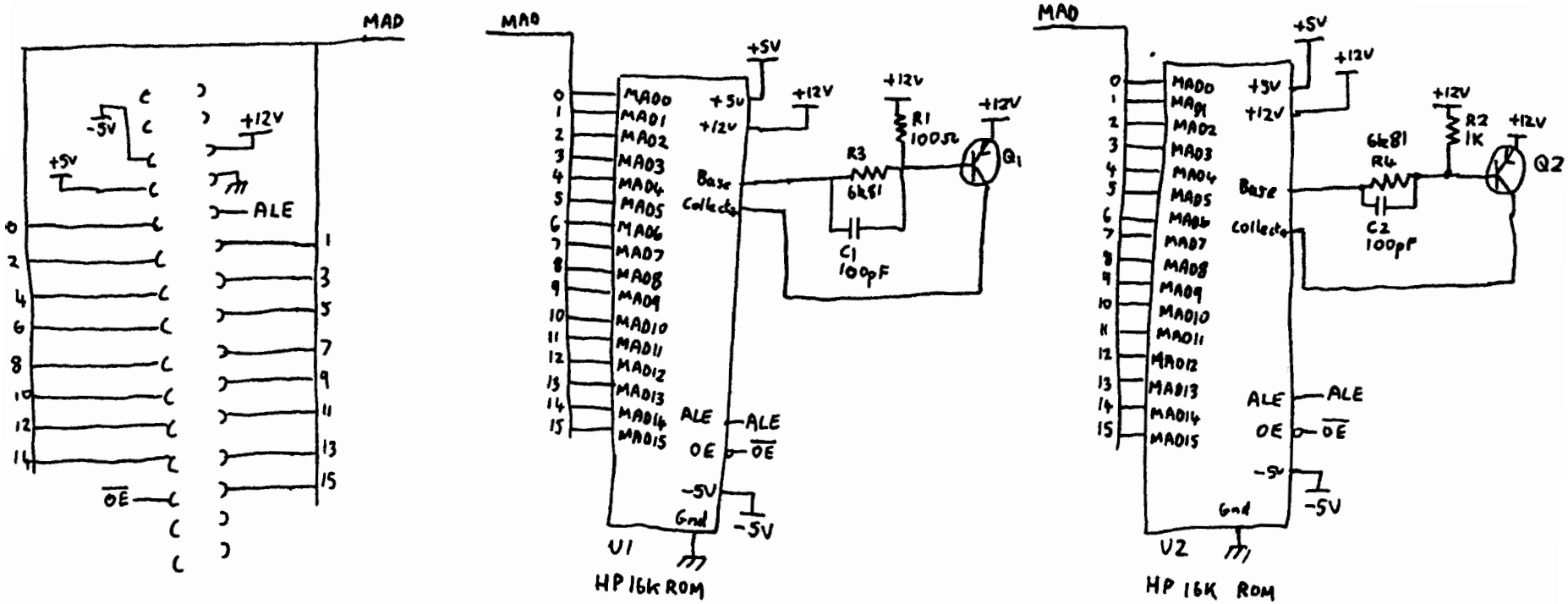


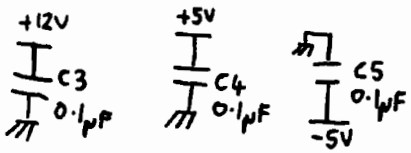


Matrix ROM

U1 1818-2632
U2 N/F

PCB Fitted Component Side

UP

HP 9825 ROM Cartridge (Type 2)

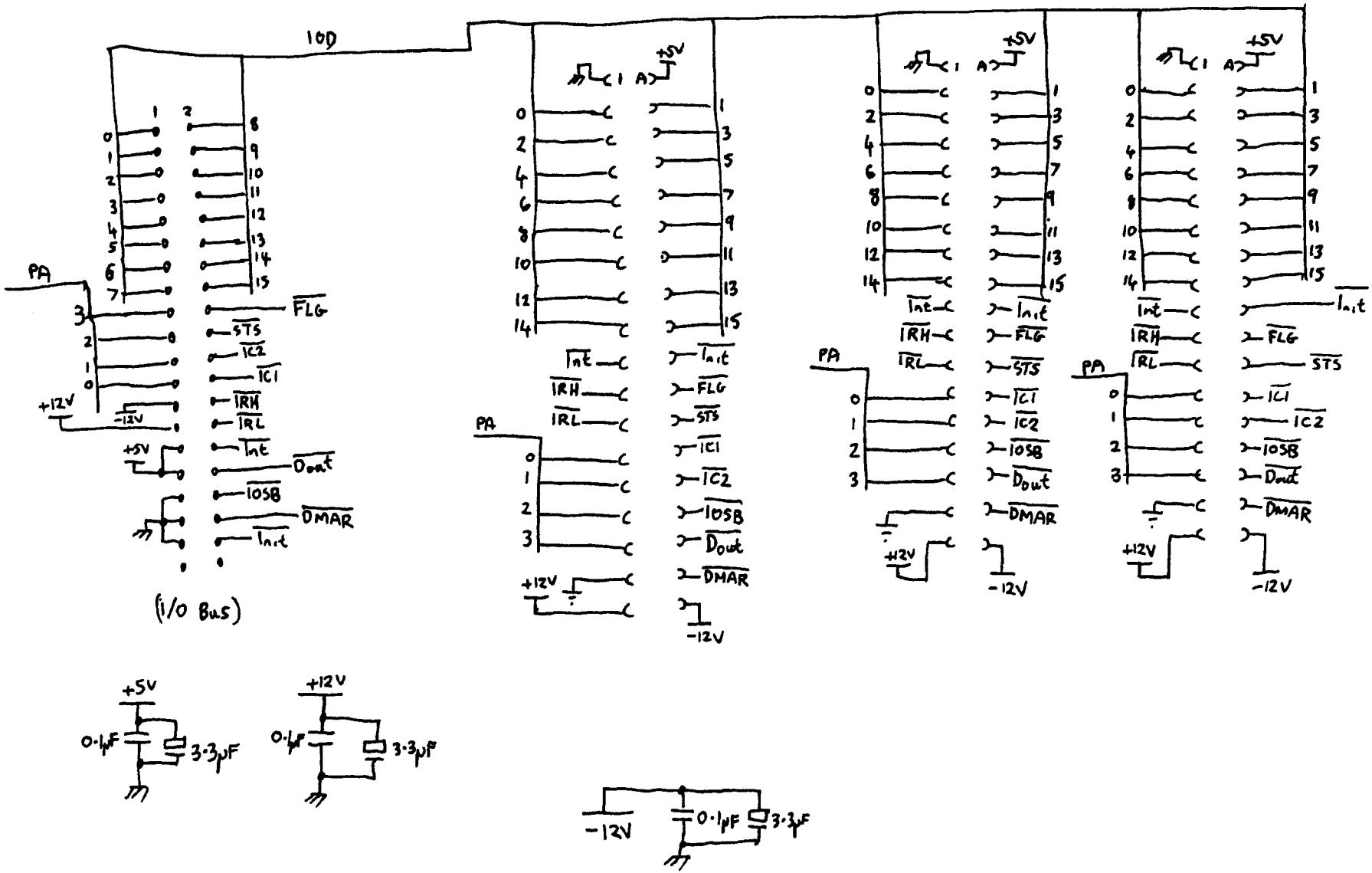


HP 9825 I/O Backplane

09825-66571

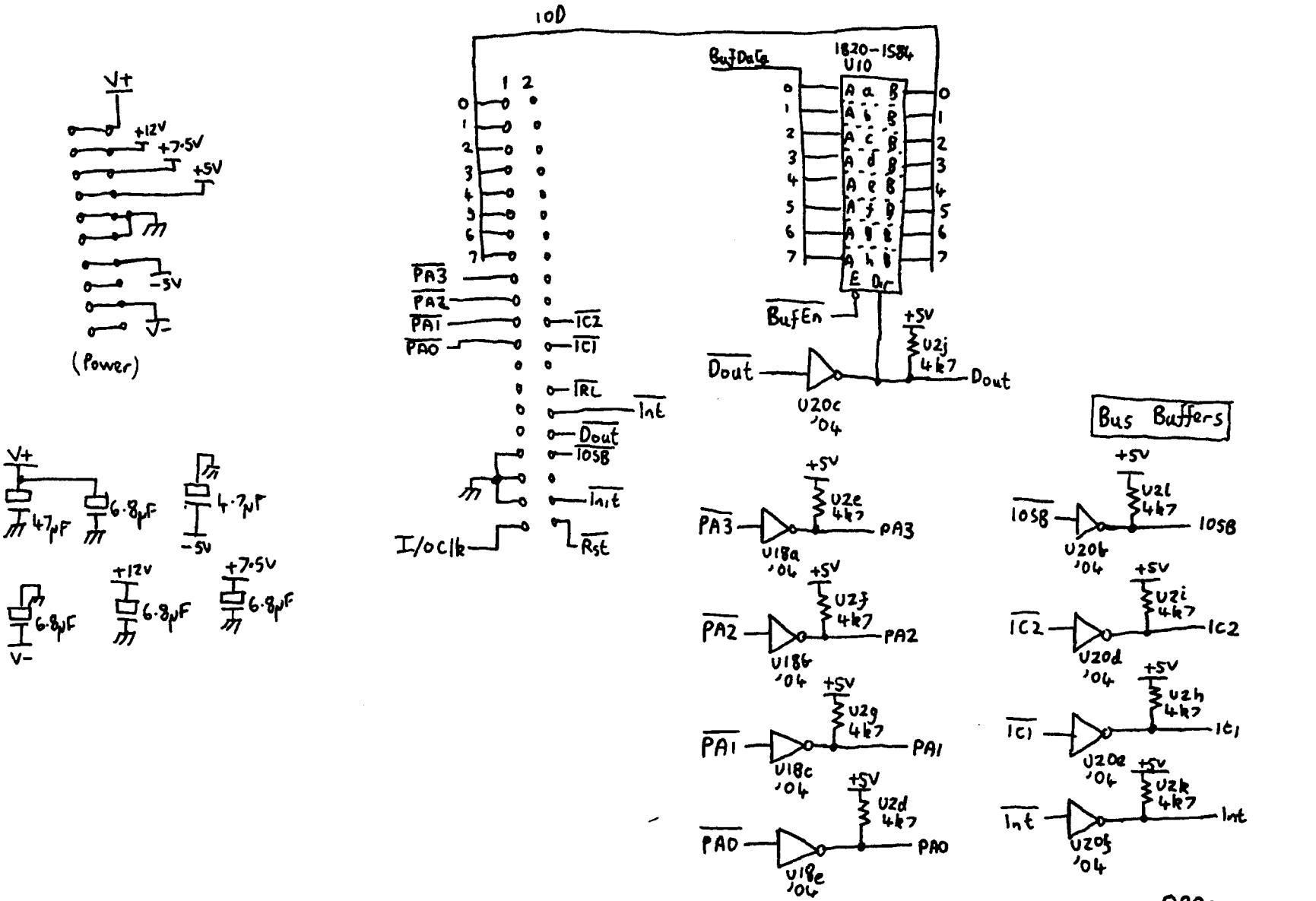


HP 9825 Keyboard/Display/Printer Interface Sheet ①

09825-66533

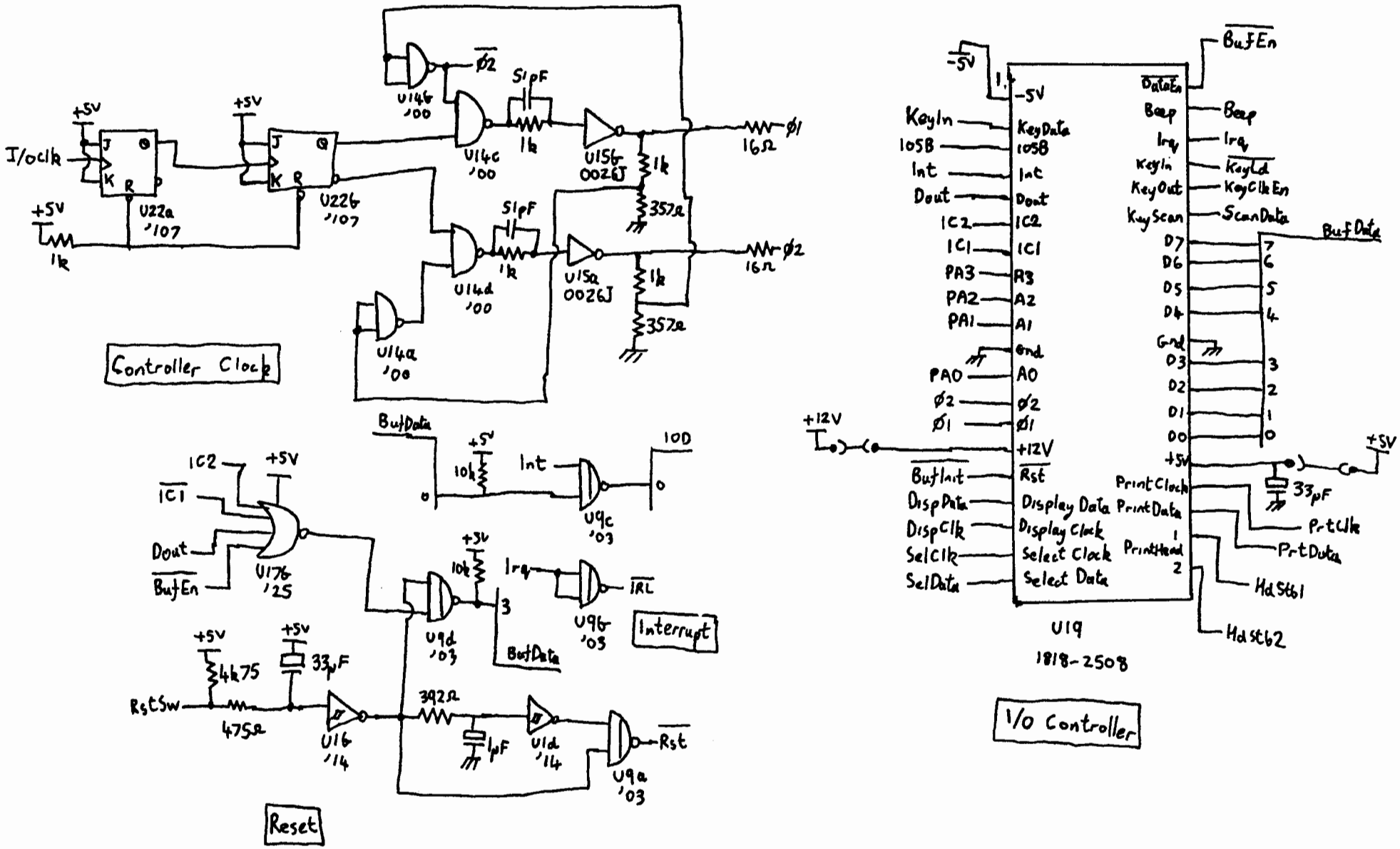


HP 9825 Keyboard / Display / Printer Interface Sheet ②

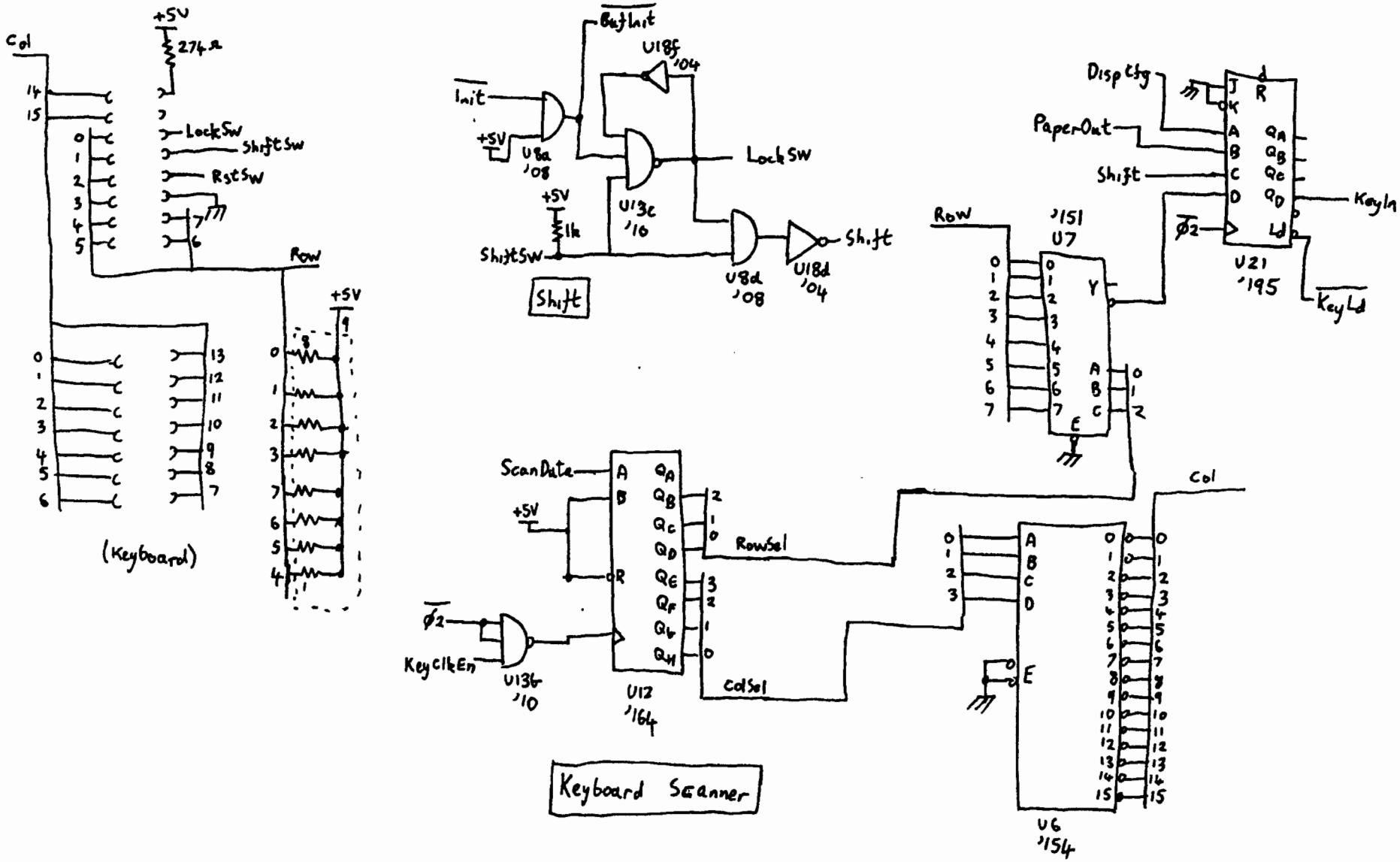


HP9825 Keyboard/Display/Printer Interface Sheet 3

09825-66533

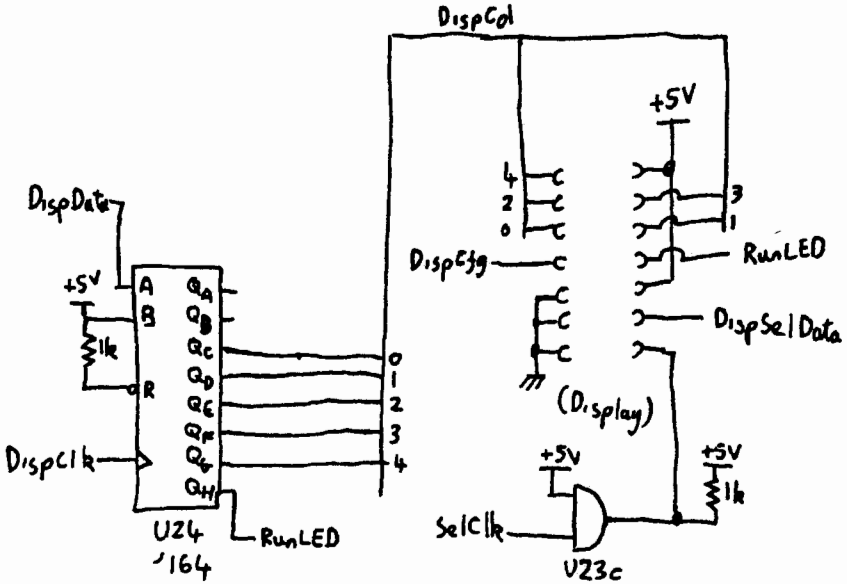


Display Interface

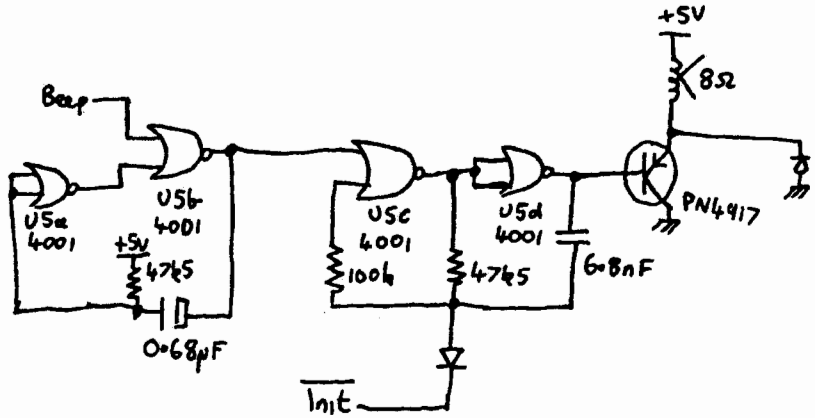


Beeper

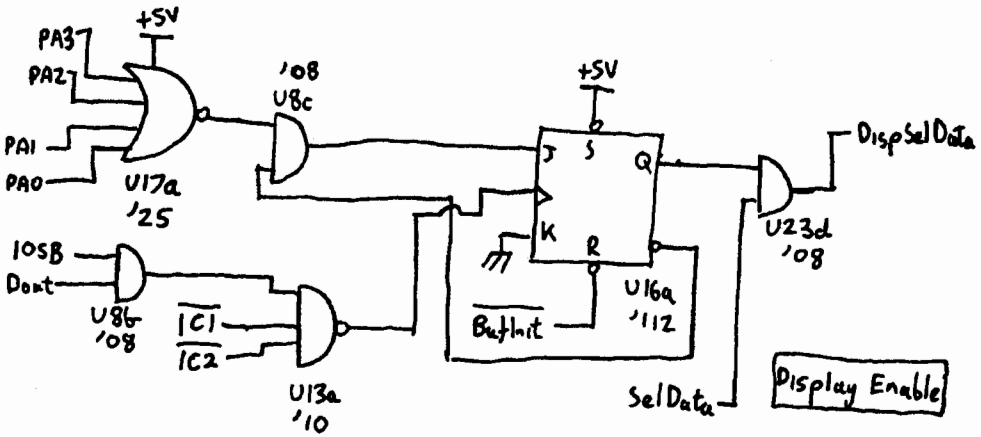


Display Enable

HP9825 Keyboard / Display / Printer Interface Sheet 4 09825-66533

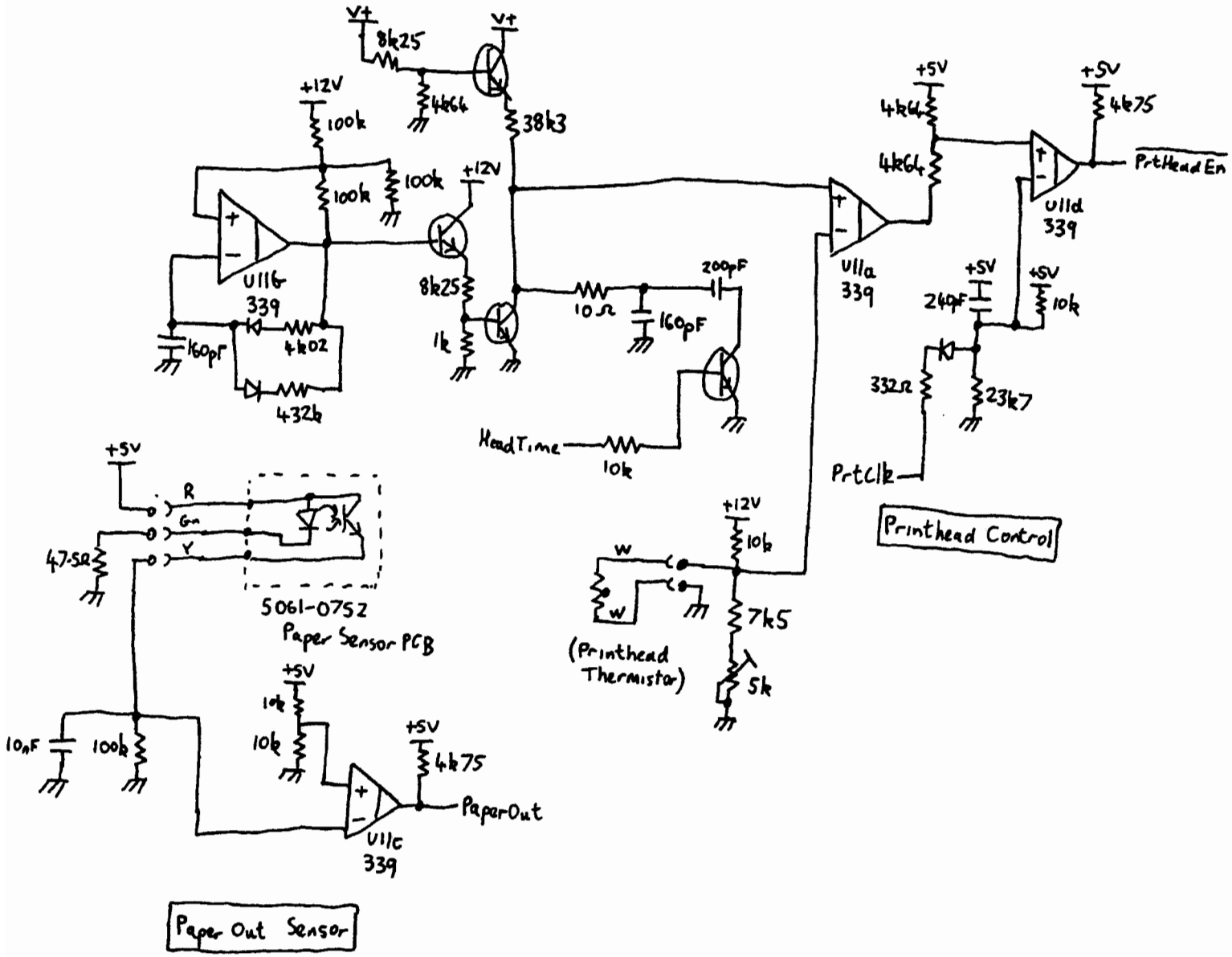


HP9825 Keyboard /Display /Printer Interface Sheet 5 09825-66533

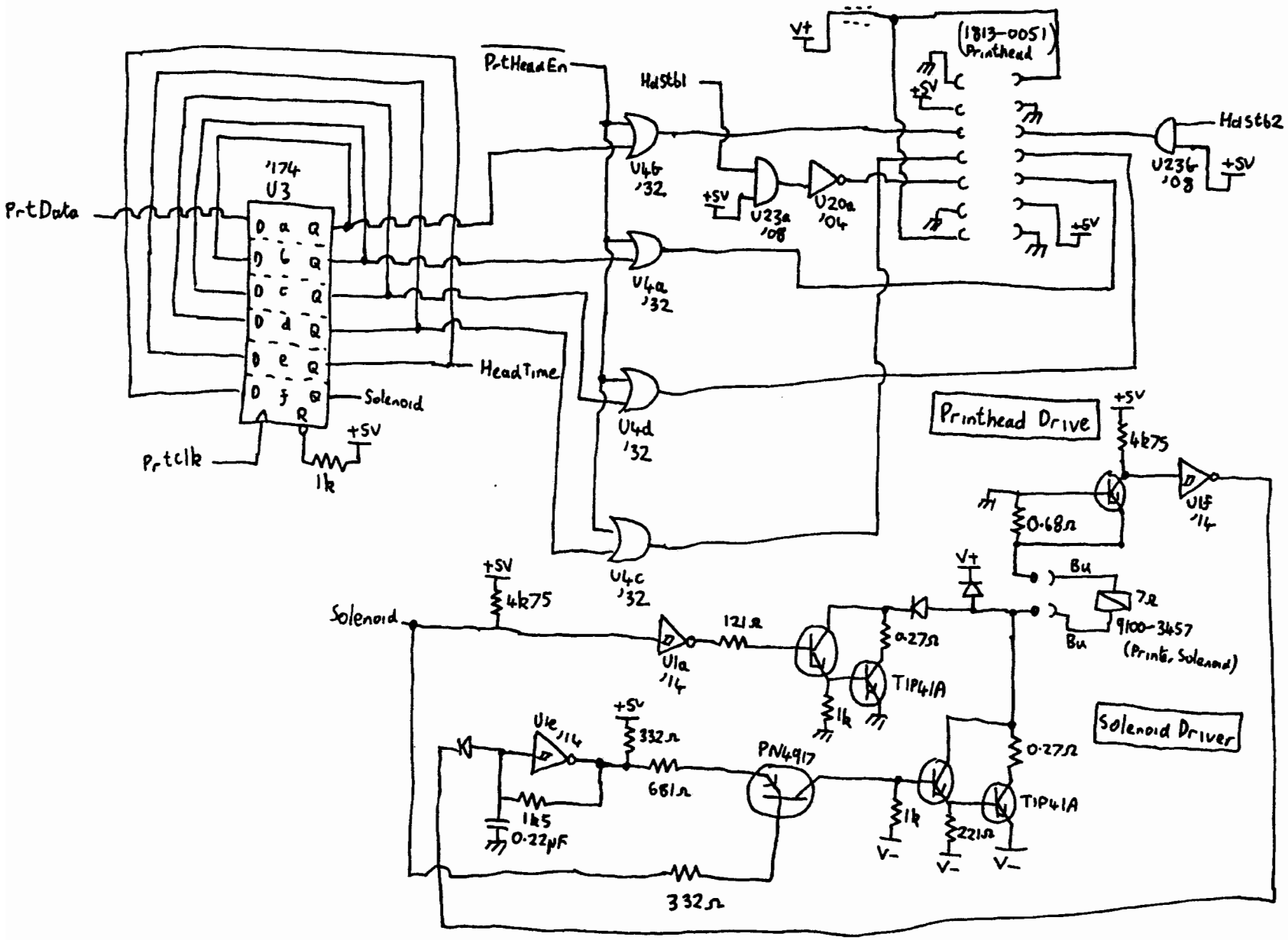


HP9825 Keyboard/Display/Printer Interface Sheet 6 09825-66533

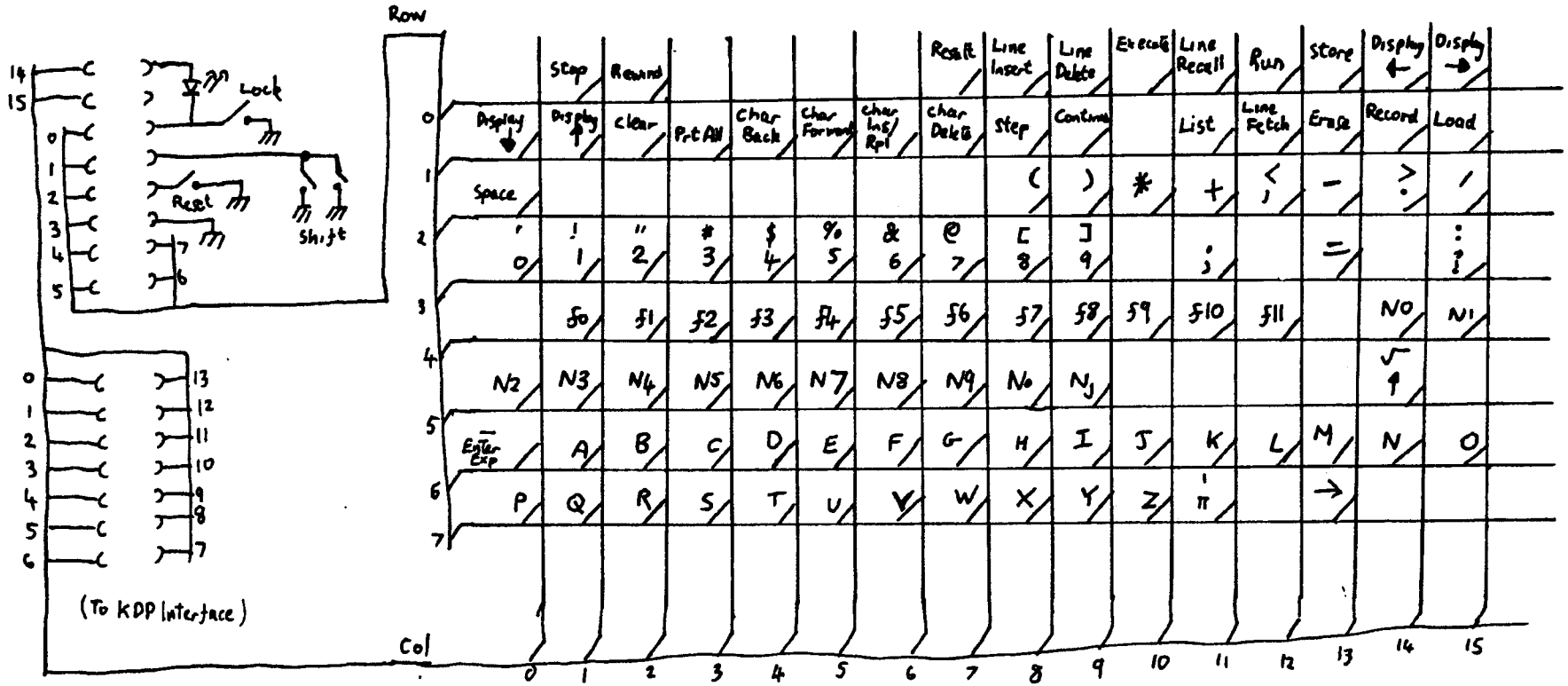


## HP 9831 Changes

| Row | Col | |
|---|---|---|
| 0 | 7 | N↑ |
| 0 | 8 | Line Delete |
| 0 | 9 | Line Step |
| 1 | 6 | Char Insert |
| 1 | 8 | Init |
| 1 | 11 | Trace |
| 1 | 14 | Store |

| Row | Col | |
|---|---|---|
| 3 | 11 | ⋮ ; |
| 3 | 15 | ? / |
| 7 | 11 | ⊥ |
| 7 | 13 | Result |

09825-66537
5021-1416

HP 9825 Keyboard

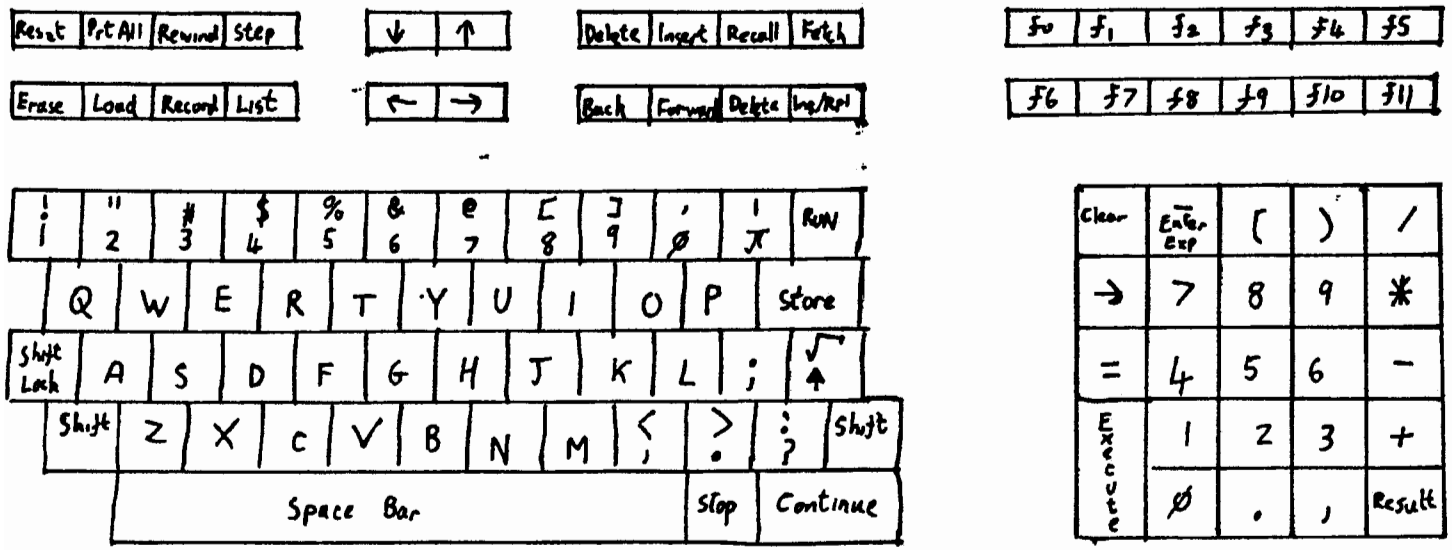


HP9825 Keycaps

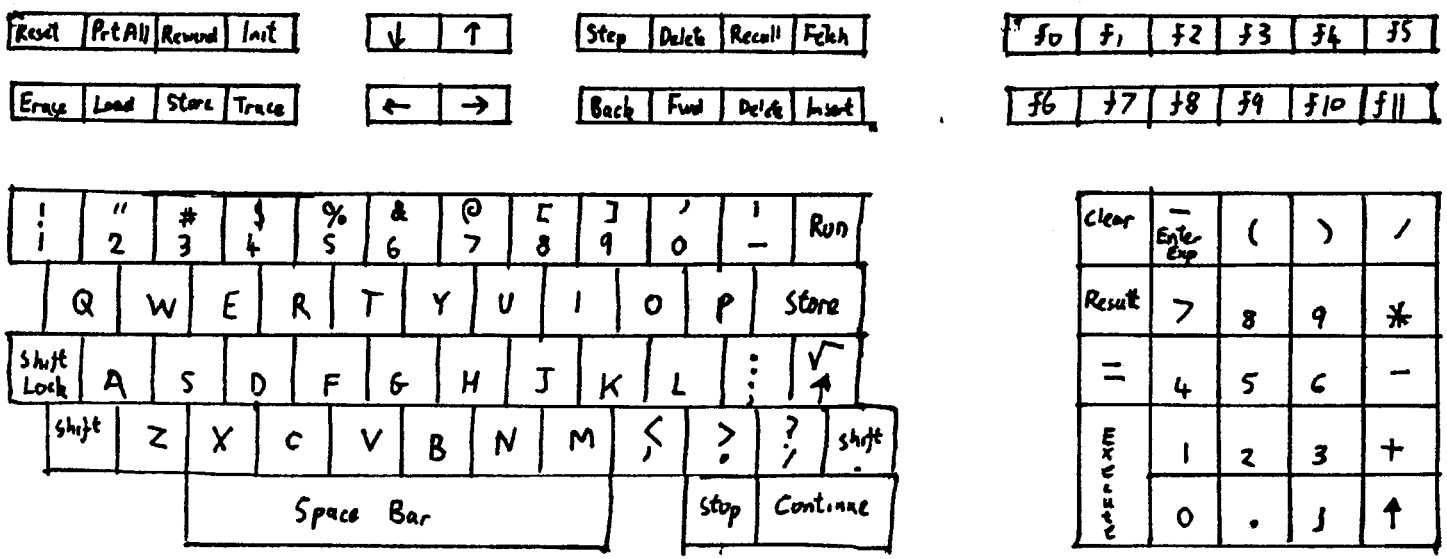


HP9831 Keycaps

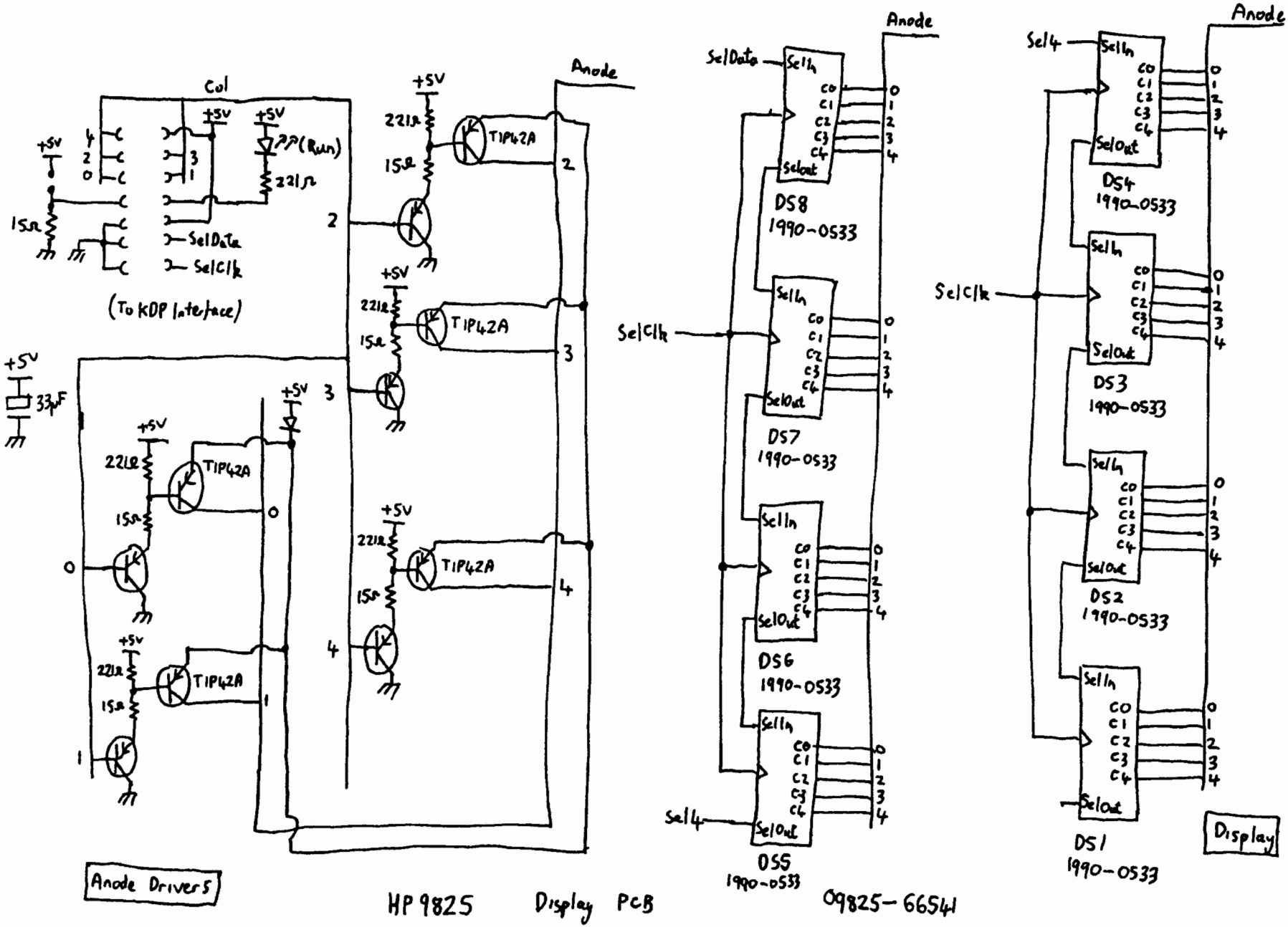
Col
+5V
4
2
0
3
1
LP (Run)
221Ω
15Ω
SelData
SelClk
(To KDP Interface)
33μF
221Ω
15Ω
TIP42A
Anode
0
1
2
3
4
Anode Drivers
HP 9825 Display PCB
SelData
SelClk
Sel4
SelIn
SelOut
C0
C1
C2
C3
C4
DS8
1990-0533
DS7
1990-0533
DS6
1990-0533
DS5
1990-0533
DS4
1990-0533
DS3
1990-0533
DS2
1990-0533
DS1
1990-0533
Display
09825-66541

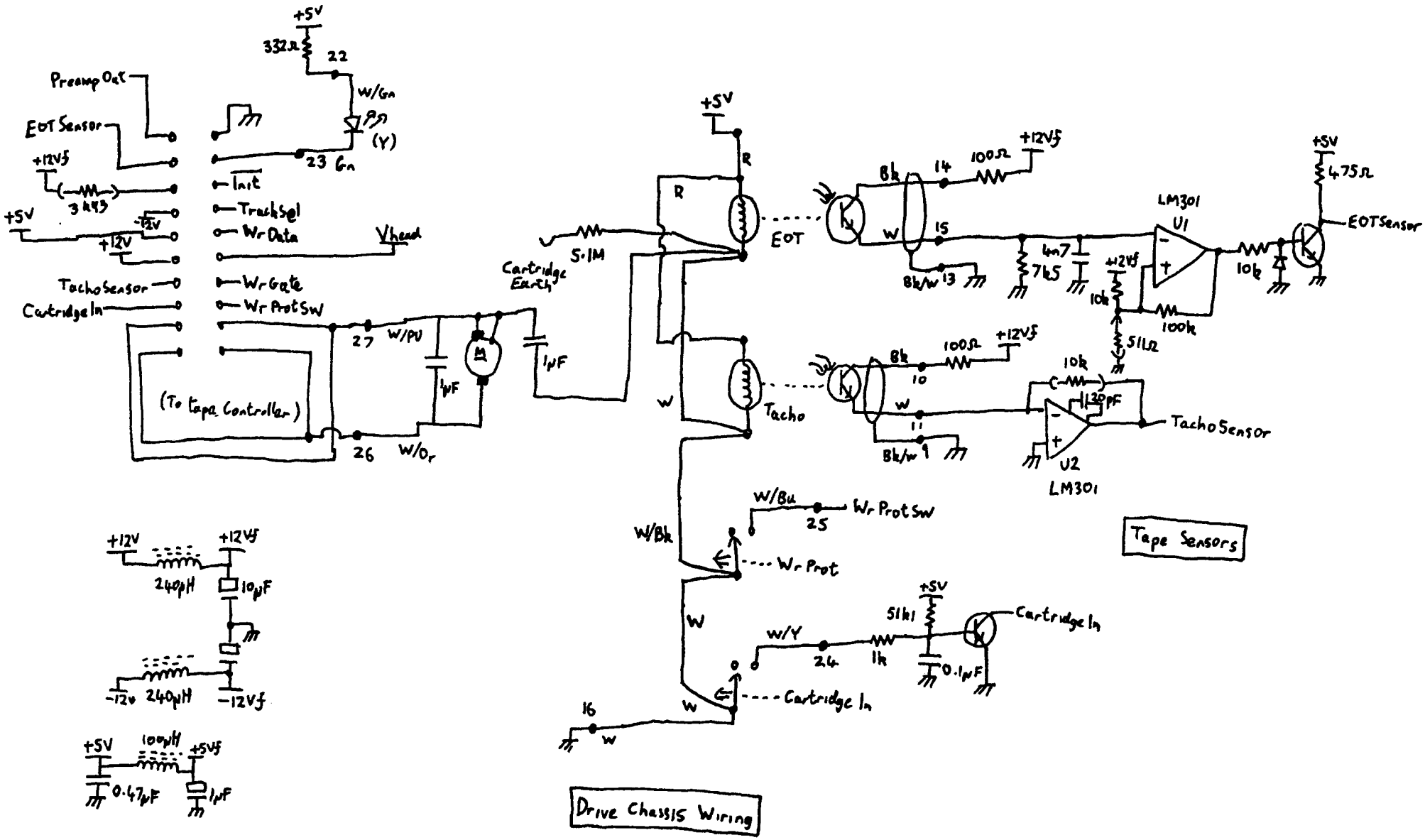


HP9825 Tape Drive Sheet ① 09815-66504

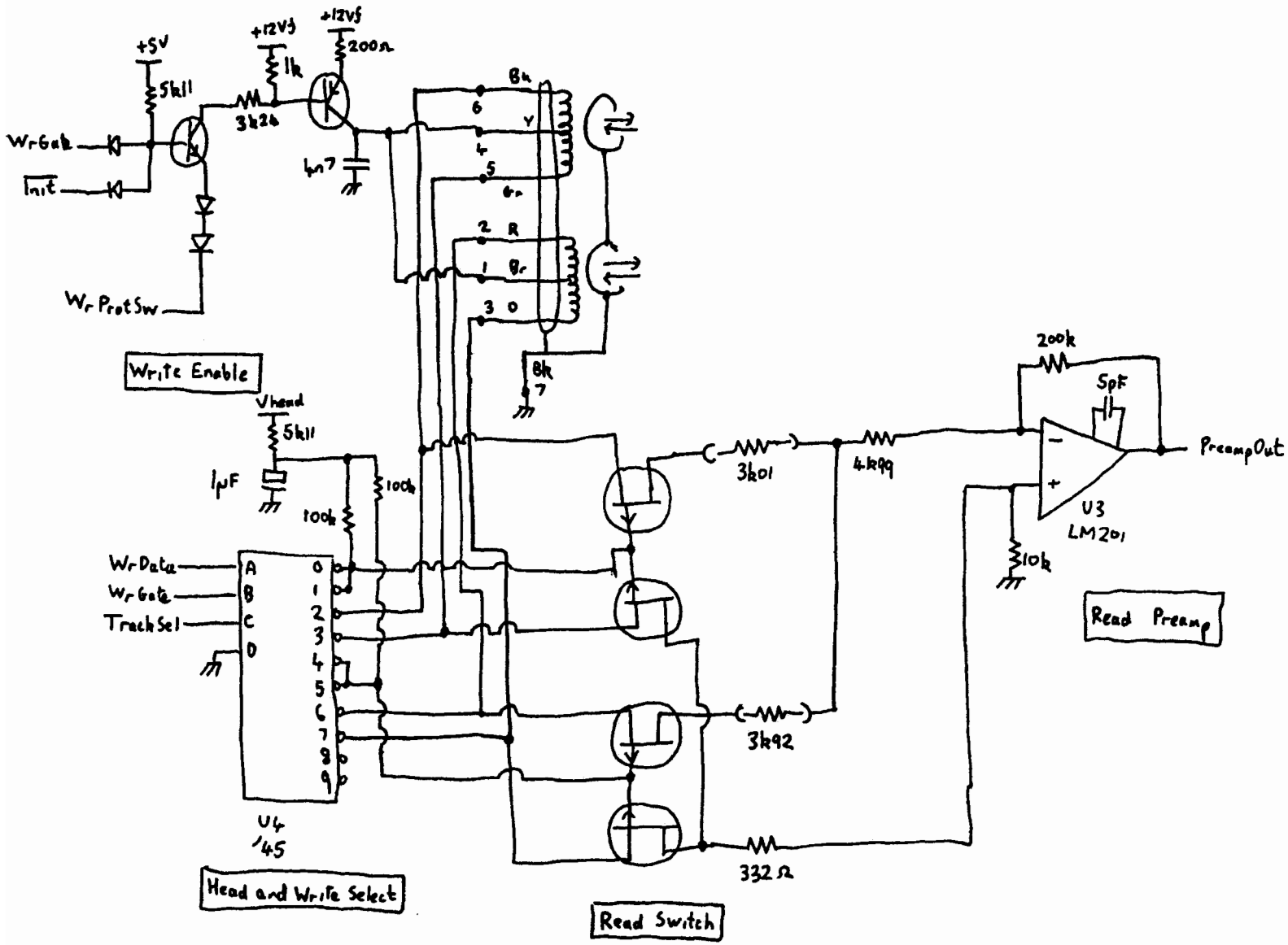


HP9825 Tape Drive Sheet ② 09815-66504

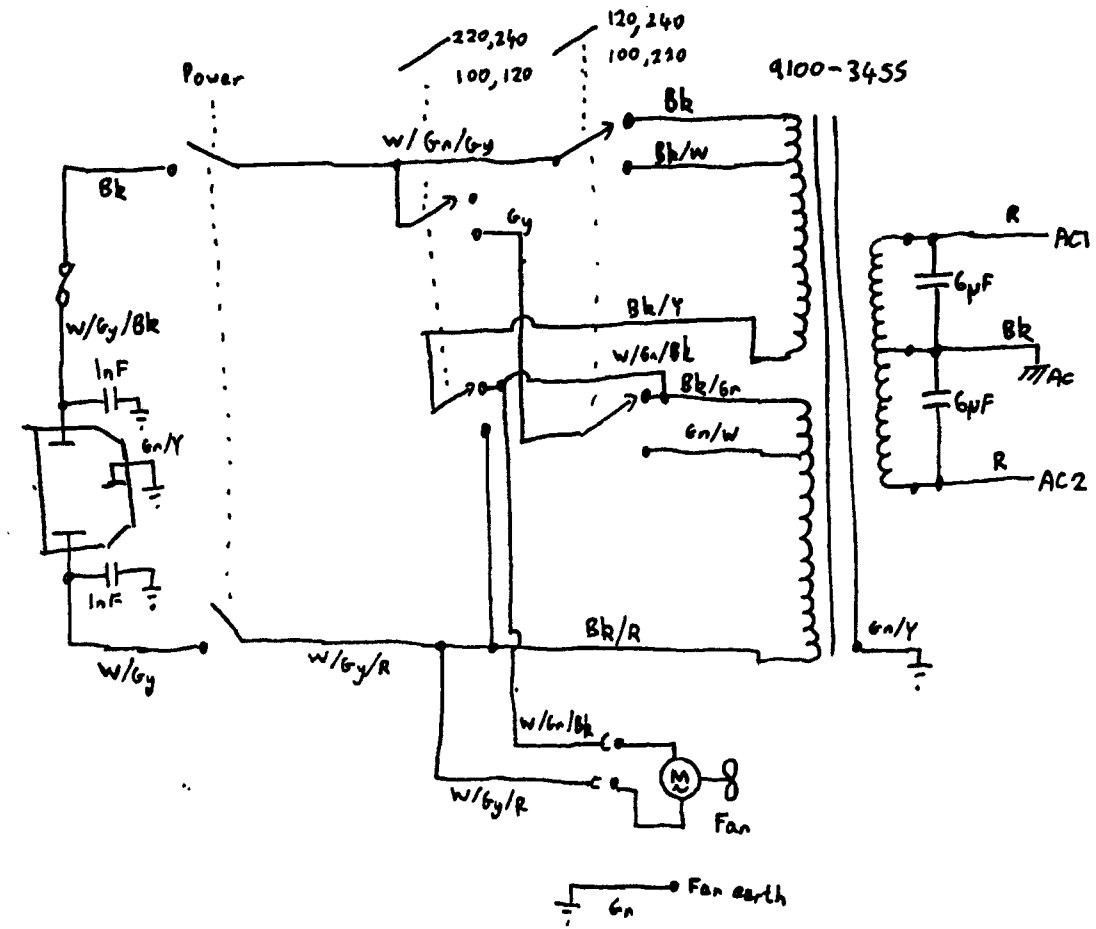


HP9825 Power wiring Sheet 1

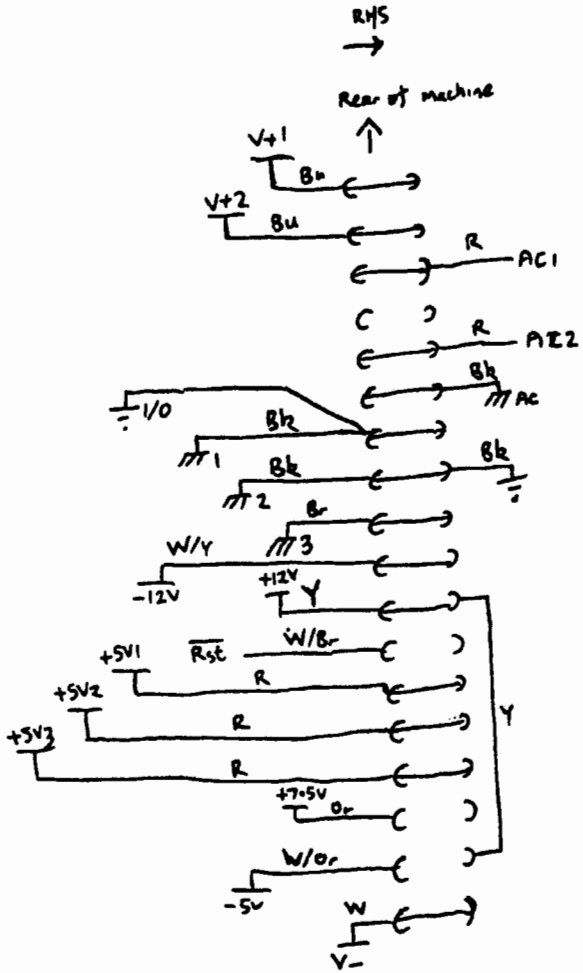


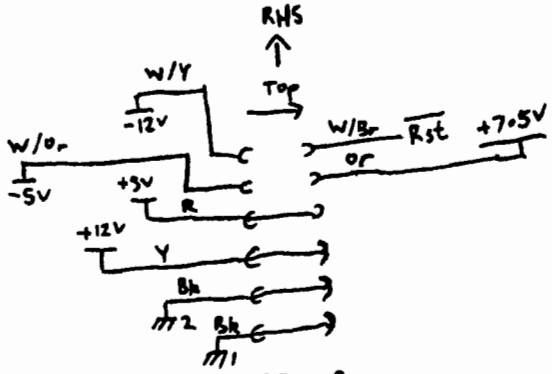


CPU Power

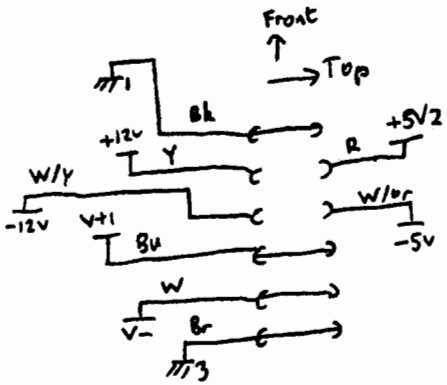


Tape Controller Power

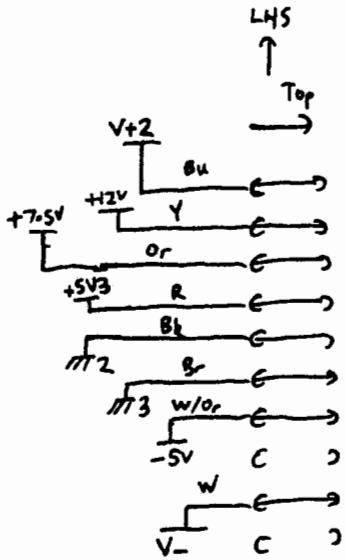


Keyboard / Display / Printer Power

(Looking Into Sockets)

HP9825 Power Wiring Sheet 2

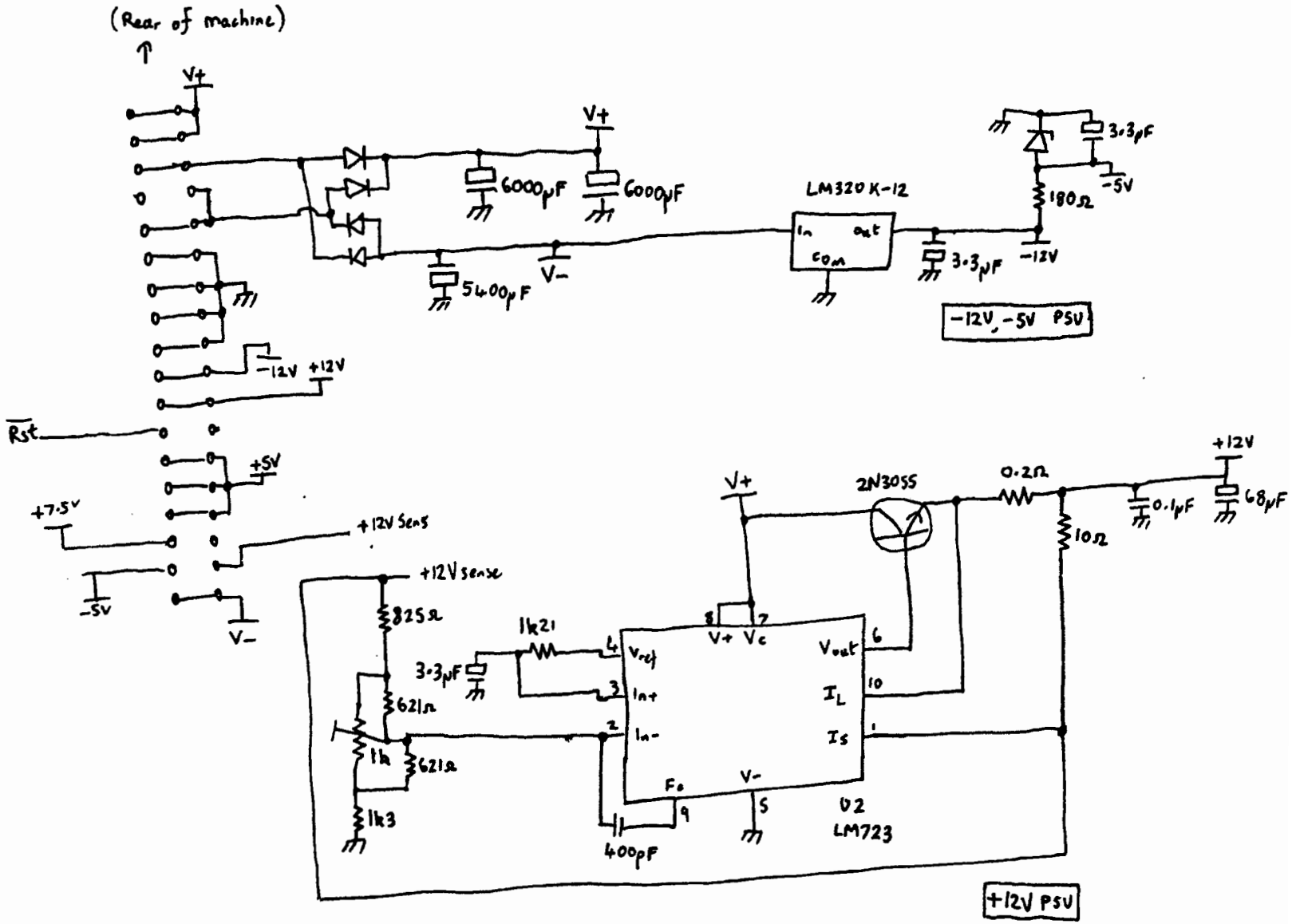


HP 9825 PSU Sheet 1 09825-69551

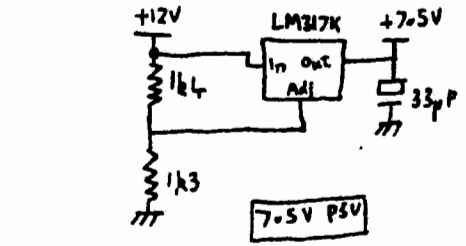


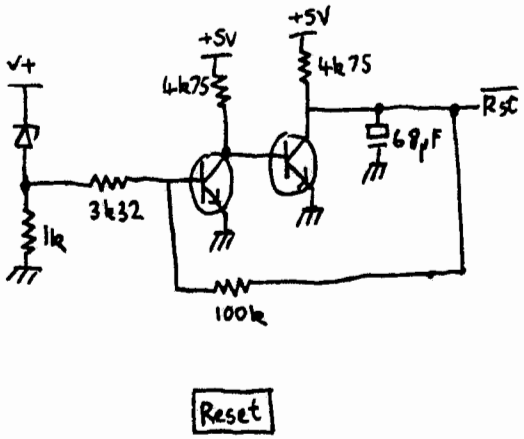


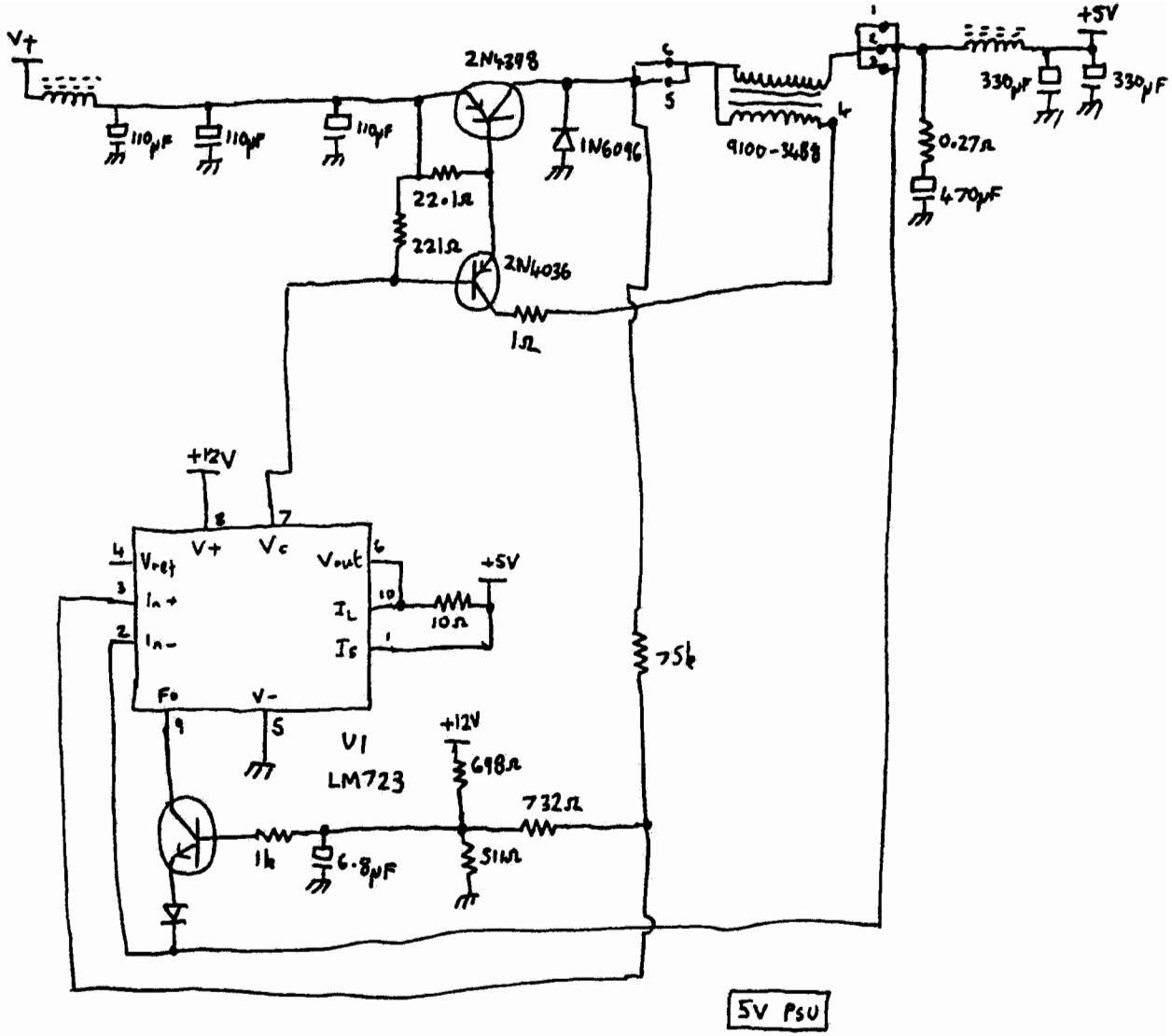


HP9825 PSU Sheet ② 09825-69551